DATAFORTH®

2017 Full-Line Catalog

Instrument Class®

Industrial Electronics

Data Acquisition & Control

Signal Conditioning

Data Communications

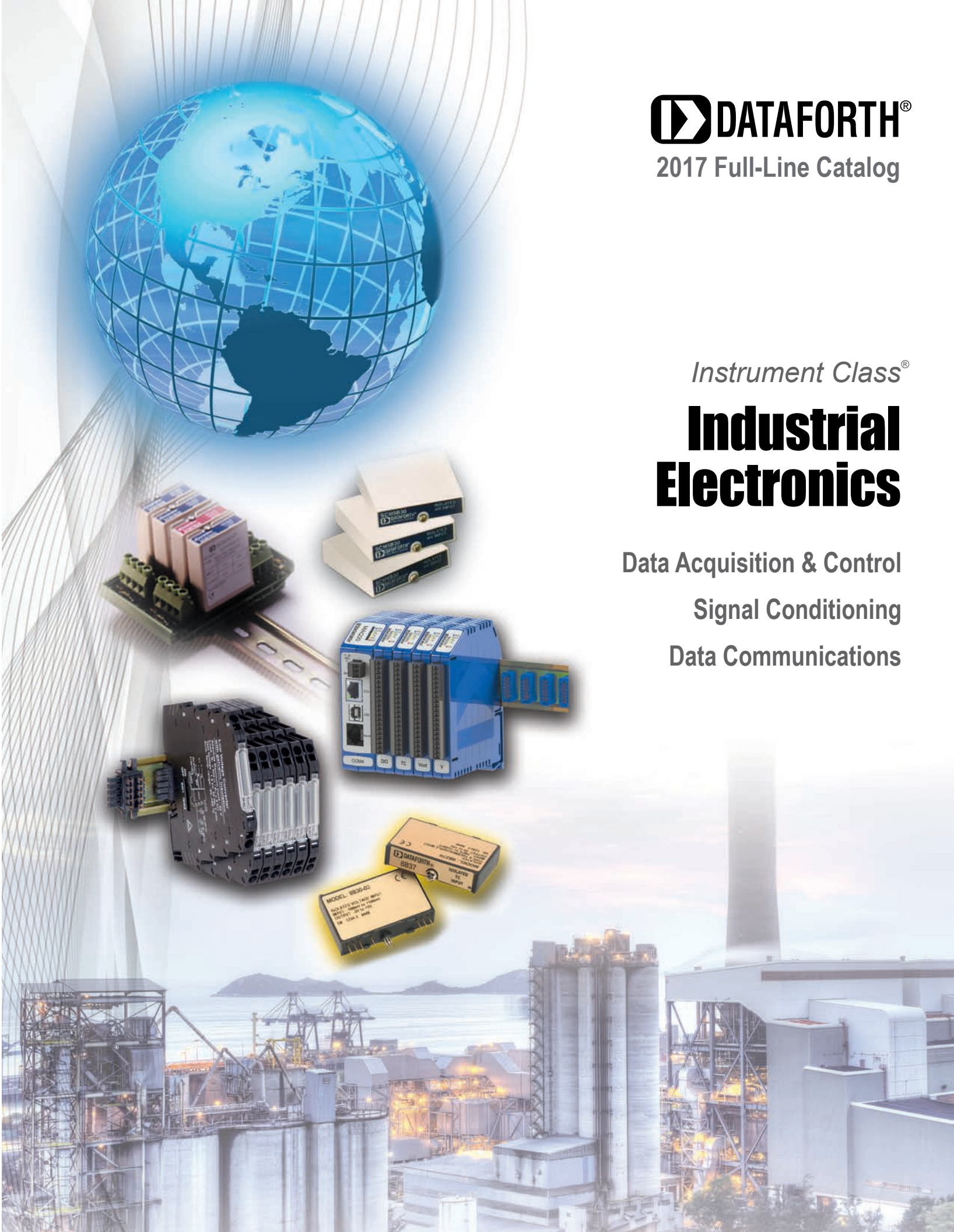

Table of Contents

Quick Product Selection Guide 1

SCM5B Isolated Analog Signal Conditioning Products



SCM5B Selection Guide 3
Analog Voltage Input Modules, Narrow Bandwidth: SCM5B30/31 6
Analog Current Input Modules: SCM5B32 8
True RMS Input Modules: SCM5B33 10
Linearized 2- or 3-Wire RTD Input Modules: SCM5B34 12
Linearized 4-Wire RTD Input Modules: SCM5B35 14
Potentiometer Input Modules: SCM5B36 16
Non-Linearized Thermocouple Input Modules: SCM5B37 18
Strain Gage Input Modules, Narrow Bandwidth: SCM5B38 20
Strain Gage Input Modules, Wide Bandwidth: SCM5B38 22
Current Output Modules: SCM5B39 24
Matched-Pair Servo/Motor Controller Modules: SCM5B392 26
Analog Voltage Input Modules, Wide Bandwidth: SCM5B40/41 28
2-Wire Transmitter Interface Modules: SCM5B42 30
General Purpose Input Modules: SCM5B43 32
Frequency Input Modules: SCM5B45 34
Linearized Thermocouple Input Modules: SCM5B47 36
Accelerometer Input Module: SCM5B48 38
Voltage Output Modules: SCM5B49 40
SCM5B Module Dimensions and Pinouts 42
SCMVAS Voltage Attenuator System 43
Isolated Analog Voltage Input Modules: SCM5B30/40-07 44
High Voltage Attenuator Modules: SCMVAS-Mnnn 45
SCM5B Backpanels and Accessories 48

SCM7B Isolated Process Control Signal Conditioning Products



SCM7B Selection Guide 66
Analog Voltage Input Modules: SCM7B21/30/31 68
Bipolar Voltage Output Modules: SCM7B22 70
Process Current/Voltage Input Modules: SCM7B32/33 72
Linearized 2- or 3-Wire RTD Input Modules: SCM7B34/34N 74
2-Wire Transmitter Interface Modules with Loop Power: SCM7B35 76
Potentiometer Input Modules: SCM7B36 78
Non-Linearized Thermocouple Input Modules: SCM7B37 80
Process Current Output Modules: SCM7B39 82
Analog Voltage Input Modules, Wide Bandwidth: SCM7B40/41 84
Linearized Thermocouple Input Modules: SCM7B47 86
SCM7B Module Dimensions and Pinouts 88
SCM7B Backpanels and Accessories 89

SensorLex® 8B Isolated Miniature Signal Conditioning Products

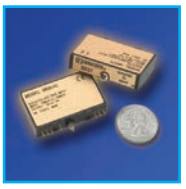

8B Selection Guide 101
Voltage Input Modules, Narrow Bandwidth: 8B30/31 104
Current Input Modules: 8B32 106
True RMS Input Modules: 8B33 108
Linearized 2- or 3-Wire RTD Input Modules: 8B34 110
Linearized 4-Wire RTD Input Modules: 8B35 112
Potentiometer Input Modules: 8B36 114
Non-Linearized Thermocouple Input Modules: 8B37 116
Strain Gage Input Modules, Wide and Narrow Bandwidth: 8B38 118
Current Output Modules: 8B39 120
Voltage Input Modules, 1kHz Bandwidth: 8B40/41 122
2-Wire Transmitter Interface Modules: 8B42 124
DC LVDT Input Modules: 8B43 126
Frequency Input Modules: 8B45 128
Linearized Thermocouple Input Modules: 8B47 130
Voltage Output Modules: 8B49 132
Voltage Input Modules, 20kHz Bandwidth: 8B50/51 134
8B Module Dimensions and Pinouts 136
8B Backpanels and Accessories 137

SCM9B Isolated, Intelligent Signal Conditioning Products



SCM9B Selection Guide 147

Data Acquisition Systems and Software



MAQ®20 Data Acquisition System: MAQ20 150
MAQ20 Communications Modules 154
MAQ20 Voltage and Current Analog Input Modules 156
MAQ20 Isolated Voltage and Current Analog Input Modules 158
MAQ20 Thermocouple Analog Input Modules 160
MAQ20 RTD & Potentiometer Analog Input Modules 162
MAQ20 Strain Gage Analog Input Module 164
MAQ20 Frequency Analog Input Module 166
MAQ20 Voltage and Current Analog Output Modules 168
MAQ20 Discrete Input/Output Modules 170
MAQ20 Discrete High Density Input Modules 172
MAQ20 Discrete High Density Output Module 174
MAQ20 Discrete Relay Output Module 176
MAQ20 System Backbones 178
ReDAQ® Shape Software for MAQ20: MAQ20-940 /-941/-945 180
IPEmotion Software for MAQ20: MAQ20-951/-952 182
MAQ20 Accessories 184
8B isoLynx® Data Acquisition System: SLX300 185
ReDAQ Shape Software for SLX300: SLX930 189
SCM5B isoLynx Data Acquisition System: SLX200 190

SCMD Isolated Digital I/O Modules



SCMD Selection Guide 196
Miniature Digital Input Modules: SCMD-MIAC/MIDC 197
Miniature Digital Output Modules: SCMD-MOAC/MODC 198
Miniature Digital Relay Output Modules: SCMD-MORO/MORC 199
Digital I/O Module Backpanels 200

DSCA High Performance DIN Isolated Analog Signal Conditioners



DSCA Selection Guide 201
Analog Voltage Input Signal Conditioners, Narrow Bandwidth: DSCA30/31 204
Analog Current Input Signal Conditioners: DSCA32 206
Isolated True RMS Input Signal Conditioners: DSCA33 208
Linearized 2- or 3-Wire RTD Input Signal Conditioners: DSCA34 210
Potentiometer Input Signal Conditioners: DSCA36 212
Non-Linearized Thermocouple Input Signal Conditioners: DSCA37 214
Strain Gage Input Signal Conditioners: DSCA38 216
Current Output Signal Conditioners: DSCA39 218
Analog Voltage Input Signal Conditioners, Wide Bandwidth: DSCA40/41 220
2-Wire Transmitter Interface Signal Conditioners with Loop Power: DSCA42 222
General Purpose Input Signal Conditioners: DSCA43 224
Frequency Input Signal Conditioners: DSCA45 226
Linearized Thermocouple Input Signal Conditioners: DSCA47 228
Voltage Output Signal Conditioners: DSCA49 230
PWR-PS5RxW Series Power Supplies 232
DSCA Dimensions and Accessories 233

DSCL and DSCP Loop Isolators and Transmitters



DSCL and DSCP Selection Guide 235
Loop Powered Isolators, Component Module: DSCL20 236
Loop Powered Isolator, DIN Mount: DSCL21 238
Loop Powered Isolators, DIN or Panel Mount: DSCL22 240
4 to 20mA Isolators, DC Supply, DIN or Panel Mount: DSCL23 243
Single Channel, Jumper Configurable Isolators, DIN or Panel Mount: DSCL24 246
Multi-Channel, Factory Configurable Isolators, DIN or Panel Mount: DSCL24 249
Programmable 2-Wire Temperature Transmitters, DIN Mount: DSCP20 252
Pt100, Ni100/Loop Powered Converter: DSCP55 256
Pt100-to-DC Current/Voltage Converter: DSCP61 258
Thermocouple-to-DC Current/Voltage Converter with Relay Output: DSCP62 260
DC Voltage/Current Converter: DSCP63 262
DC Voltage/Current Converter with Transducer Power Supply: DSCP64 264
DC Low Voltage Converter: DSCP65 266
Power Supply Connection Module for DIN Rail Power Bus: DSCP70 268
Configurable Voltage/Current Input Signal Conditioners, DIN Mount: DSCP81 270

DSCT DIN Rail Mount Two-Wire Transmitters



DSCT Selection Guide 275
Analog Voltage Input Transmitters: DSCT30/31 276
Analog Current Input Transmitters: DSCT32 278
Linearized 2- or 3-Wire RTD Input Transmitters: DSCT34 280
Potentiometer Input Transmitters: DSCT36 282
Non-Linearized Thermocouple Input Transmitters: DSCT37 284
Linearized Thermocouple Input Transmitters: DSCT47 286
DSCT Wiring Diagram and Loop Drive Chart 288
DSCT Dimensions and Accessories 289

Data Communication Products



Data Communications Selection Guide 291
Fully Isolated DIN Rail RS-232 to RS-485 Converters/Line Drivers: DCP485 292
DIN Rail Dual Port Signal-Powered RS-232 Line Drivers: DCP35 294
General Purpose RS-232 Line Drivers: LDM30 296
Signal Powered RS-232 Line Drivers: LDM35 298
Fully Isolated RS-232 Line Drivers: LDM70 300
Fully Isolated RS-232/422 Converters: LDM422 302
Fully Isolated RS-232/485 Converters: LDM485 304
Signal Powered Fiber Optic RS-232 Converters: LDM80 306
Fiber Optic RS-232/422/423 Converters: LDM85 308
Transformers: PT3/PT3E 310

The Company

"Our passion at Dataforth Corporation is designing, manufacturing, and marketing the best possible data acquisition and control, signal conditioning, and data communication products. Our mission is to set new standards of product quality, performance, and customer service." **Dataforth Corporation**, with 30+ years of experience, is the worldwide leader in Instrument Class® Industrial Electronics – rugged, high-performance data acquisition and control, signal conditioning, and data communication products that play a vital role in maintaining the integrity of industrial automation, data acquisition, and quality assurance systems. Our products directly connect to most industrial sensors and protect valuable measurement and control signals and equipment from the dangerous and degrading effects of noise, transient power surges, internal ground loops, and other hazards.

Global Service and Support

Dataforth spans the globe with more than 50 International Distributors and US Representative Companies. Our customers benefit from a team of over 130 sales people highly trained in the application of precision products for industrial markets. In addition, we have a team of application engineers in our Tucson factory ready to solve any in-depth application questions, and we maintain ample inventory that allows small quantity orders to be shipped from stock.

Research and Development Team

A professional staff of engineering and marketing personnel identify and develop products to satisfy our customers' most stringent requirements. Dataforth's design department is composed of advanced degree engineers specializing in innovative analog and isolation circuit development, high performance mixed signal design, and software development, ensuring our customers of the highest performance products at an affordable price.

Automated Manufacturing and Test

Automated manufacturing techniques and machines are employed to produce our state-of-the-art SMT designs in optimum time and at minimum cost. All products are tested multiple times in automated test fixtures, and many undergo a 48-hour burn-in at elevated temperatures.

Quality Control

Dataforth operates under an ISO9001:2008 quality management system. Since our products are used in critical industrial data acquisition, control, and test and measurement applications, we strive to produce the highest quality, premier performance products available on the market. Zero defects and complete customer satisfaction are our goals. To further strengthen our commitment to quality, Dataforth secures certifications such as UL, CSA, ATEX, and CE.

www.dataforth.com

Utilizing the latest web development technology, our website presents visitors with an intuitive, informative layout that quickly leads them to their areas of interest. A parametric search engine efficiently locates products by model number or functional description, while an e-commerce section provides pricing information and order entry. Fully detailed product data sheets and application notes are available for download in PDF format. Visitors also can request literature, view new product release data, read our newsletters, get answers to technical questions, and quickly locate Distributors and Sales Representatives.

The Future

We fully understand that our ongoing success depends on satisfying our customers' requirements. Building upon our position as marketplace leader, Dataforth continues to seek out the most cost-effective emerging technologies in design and manufacturing in order to provide the highest performance quality products at an affordable price. Our expansion into a second building adds thousands of square feet to our manufacturing and test facilities, providing flexibility and space for continued process-oriented growth. By intelligently observing and responding to changing market needs, we ensure continuation of our critical customer partnerships.

©1995-2017 Dataforth Corporation. All Rights Reserved. ISO9001:2008-Registered QMS

The information in this catalog has been checked carefully and is believed to be accurate; however, Dataforth assumes no responsibility for possible inaccuracies or omissions. Specifications are subject to change without notice.

The information, tables, diagrams, and photographs contained herein are the property of Dataforth Corporation. No part of this catalog may be reproduced or distributed by any means, electronic, mechanical, or otherwise, for any purpose other than the purchaser's personal use, without the express written consent of Dataforth Corporation.

Instrument Class© is a registered trademark of Dataforth Corporation. isoLynx© is a registered trademark of Dataforth Corporation.
MAQ©20 is a registered trademark of Dataforth Corporation. ReDAQ© is a registered trademark of Dataforth Corporation.
SensorLex© is a registered trademark of Dataforth Corporation.

LabVIEW™ is a trademark of National Instruments Corporation. Microsoft Visual Studio© is a registered trademark of Microsoft Corporation, Inc.
Modbus© is a registered trademark of the Modbus Organization, Inc. National Instruments Measurement Studio© is a registered trademark of National Instruments Corporation.

Dataforth

- 1200+ Products for Industrial Data Acquisition & Control, Signal Conditioning, and Data Communications
- 30+ Years of Experience
- Better than 6σ Reliability
- All Products Manufactured in the USA per RoHS II Directive 2011/65/EU
- Our Quality Management System is ISO9001:2008 Registered

As Our Track Record Proves, We are Dedicated to Your Success!

SCM5B Isolated Analog Signal Conditioning Modules

True 3-Way Isolation, 5 Volt Supply Voltage, “Lab” Performance

20 family groups & 250+ different modules: a wide selection of input and output functions

Each SCM5B module provides a single channel of isolated analog input or output. Input modules interface to all types of industrial sensors. Analog inputs include voltage and current in narrow and wide bandwidths, thermocouple, RTD, accelerometer, potentiometer, strain gage, frequency, and 2-wire transmitter. Output modules accept a high-level analog voltage signal from a host system and provide process current or voltage output to field devices.

Key 5B Features

- ±0.03% Accuracy (Typical)
- ±0.005% Linearity
- 1500Vrms Transformer Isolation & 240Vrms Field-Side Protection
- ANSI/IEEE C37.90.1 Transient Protection
- 5V Power (30mA Typical)
- 4- to 6-Pole Low-Pass Filtering
- Low Output Noise
- –40°C to +85°C Operating Temperature
- CSA C/US Certified, (Class I, Division 2, Groups A, B, C, D)
- CE and ATEX Compliant
- Manufactured per RoHS II Directive 2011/65/EU

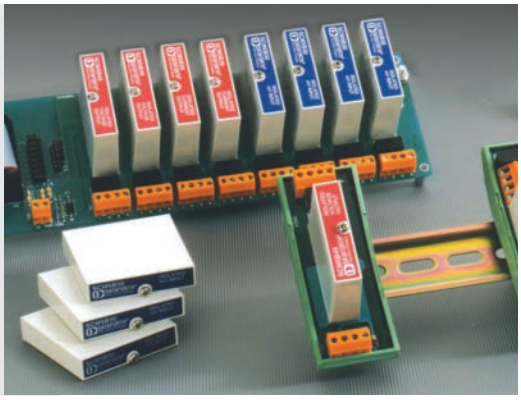

SCM7B Isolated Process Control Signal Conditioning Modules

2-Way Isolation, 24 Volt Supply Voltage, “Industrial” Performance

14 family groups & 202 different modules: a compact, low cost solution for industrial data acquisition and process control applications

Each SCM7B module provides a single channel of isolated analog input or output. Various input modules accept analog voltage or current signals from all types of field sensors and sources; they provide high-level analog outputs suitable for use in a process control system. Output modules accept high-level analog voltage signals from a process control system and provide current or voltage output to a field device.



Key 7B Features

- ±0.03% Accuracy (Typical)
- ±0.01% Linearity
- 1500Vrms Transformer Isolation & 120Vrms Field-Side Protection
- ANSI/IEEE C37.90.1 Transient Protection
- Wide Supply Voltage, 14V to 35VDC
- 5-Pole Low-Pass Filtering
- Low Output Noise
- –40°C to +85°C Operating Temperature
- CSA C/US Certified (Class I, Division 2, Groups A, B, C, D)
- CE and ATEX Compliant
- Manufactured per RoHS II Directive 2011/65/EU

The SCM5B, SCM7B, and SensorLex® 8B product lines include a complete selection of backpanels, DIN rail mounting options, cables, racks, power supplies, and other accessory items.

Custom SCM5B, SCM7B, SensorLex 8B, DSCA, and DSCT modules are available: consult factory for minimum quantity and pricing details on custom input ranges, output ranges, bandwidth, and other key parameters.

SensorLex® 8B Isolated Analog Signal Conditioning Modules

Miniature Size, 2-Way Isolation, 5 Volt Supply Voltage, Instrument Class® Performance

20 family groups & 135 modules: an optimal solution for monitoring real-world process signals and providing high-level signals for data acquisition

Developed in response to customer requests for a smaller isolated signal conditioner, SensorLex 8B modules are housed in a miniature package that is ideal for embedded and portable applications. All 8B modules are fully functional and provide Instrument Class analog voltage output. They interface to a wide variety of voltage, current, temperature, position, frequency, and strain measuring devices.

Key 8B Features

- ±0.05% Accuracy (Typical)
- ±0.02% Linearity
- 1500Vrms Transformer Isolation & up to 240Vrms Field-Side Protection
- ANSI/IEEE C37.90.1 Transient Protection
- 5V Power (30mA Typical)
- 3- to 5-Pole Low-Pass Filtering
- Low Output Noise
- –40°C to +85°C Operating Temperature
- C-UL-US Listed (Class I, Division 2, Groups A, B, C, D)
- CE Compliant
- ATEX Compliance Pending
- Manufactured per RoHS II Directive 2011/65/EU

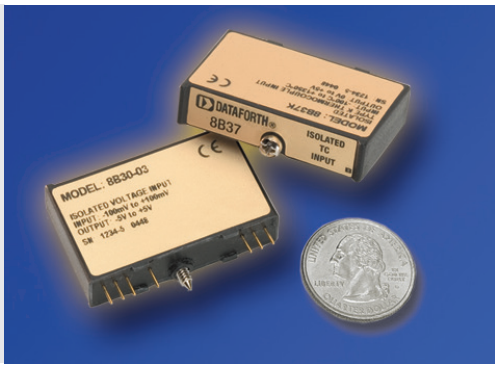

SCMD Isolated Digital I/O Modules

Miniature Digital I/O with 4kV Isolation

A rugged, protective isolation barrier, effective to 4kV, between the field and computer system

SCMD miniature digital I/O modules are solid-state devices that send “On” and “Off” electrical signals to and from a computer. Input modules convert AC or DC voltages to DC logic signals and send them to the computer system. Output modules work in the opposite direction, switching either AC or DC circuits On or Off in response to logic-level voltage commands from the computer.



Key SCMD Features

- 4000Vrms Optical Isolation
- UL Listed, CSA Certified, CE Compliant
- Manufactured per RoHS Directive 2002/95/EC

DSCA High Performance, DIN Rail Mount Isolated Signal Conditioners

True 3-Way Isolation, High Accuracy, Instrument Class® Performance

Each Instrument Class DSCA module provides a single channel of isolated analog input or output for use in data acquisition, test and measurement, and control system applications.



Key DSCA Features

- ±0.03% Accuracy (Typical)
- ±0.01% Linearity
- 1500Vrms Transformer Isolation & 240Vrms Field-Side Protection
- ANSI/IEEE C37.90.1 Transient Protection
- Wide Supply Voltage, 15V to 30VDC
- Industry Standard Output of 0 to 10V ±10V, 0 to 20mA, or 4 to 20mA
- 4- to 6-Pole Low-Pass Filtering
- Low Output Noise
- –40°C to +80°C Operating Temperature
- Plug-in Terminal Blocks Simplify Wiring
- C-UL-US Listed (Class I, Division 2, Groups A, B, C, D)
- CE and ATEX Compliant
- Manufactured per RoHS II Directive 2011/65/EU

MAQ®20 Industrial Data Acquisition & Control System

High Performance, Powerful, Flexible

The industry's lowest cost per channel, integral PID loop control, and ±0.035% system accuracy; ideal for test and measurement, factory, process, and machine automation, military and aerospace, power and energy, environmental monitoring, and oil and gas applications

Encompassing more than 30 years of design excellence and quality in the industrial test and measurement and control industry, the MAQ20 family consists of DIN rail mounted, programmable, multi-channel, industrially rugged signal conditioning input and output modules and communication modules. Each I/O module has a 1500Vrms isolation barrier between field-side and system-side wiring, and many models offer per-channel isolation. The MAQ20 is supported by both ReDAQ® Shape software for MAQ20 and the very advanced IPEmotion data acquisition / test and measurement software.

Key MAQ20 Features

- Industry's Lowest Cost per Channel
- ±0.035% Accuracy (Typical)
- 1500Vrms Channel-to-Bus Isolation
- Up to 240Vrms Continuous Field I/O Protection
- ANSI/IEEE C37.90.1 Transient Protection
- Graphical Control Software
  – ReDAQ Shape for MAQ20 Software
  – IPEmotion Software
- Advanced Features Including Integral PID Control, Alarms, Counters, Timers, PWMs, and more
- Wide Range 7-34VDC Input Power
- –40°C to +85°C Industrial Operating Temperature
- Heavy Industrial CE Compliant
- UL/CUL Listing Pending (Class I, Division 2, Groups A, B, C, D)
- ATEX Compliance Pending
- Manufactured per RoHS II Directive 2011/65/EU



PID Loop Control

This highly effective controller operates in both ReDAQ Shape for MAQ20 software and IPEmotion software

With ReDAQ Shape software, the controller runs in real time and provides up to 32 loops of PID control; faceplates within the software enable an engineer or operator to interact with the controller. With IPEmotion software, the PID controller runs in Windows and an unlimited number of PID control loops are possible; the only limiting factor is the processing power of the PC. Typical PID applications include steam, water, and chemical flow control; tank level control, heat-exchanger/reactor temperature control, and pressure control.

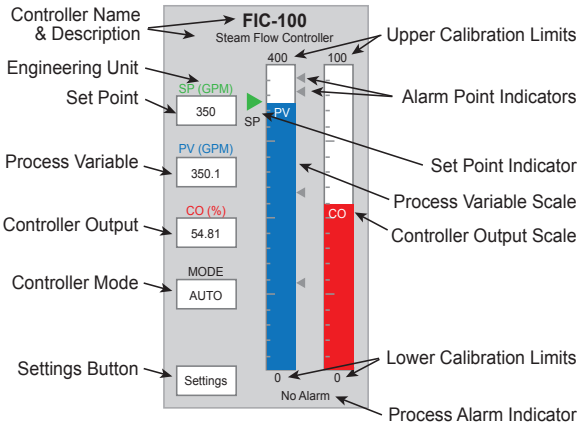

PID Faceplate in ReDAQ Shape Software

Key PID Controller Features

…with ReDAQ Shape Software

- Separate Panels for Setting Basic, Advanced, and Alarm Items
- Noninteracting and Parallel PID Control Algorithms
- Proportional and Derivative Modes can Act on Error or Process Variable
- Gap Control
- Built-in Process Variable Filtering
- Bumpless Transfer
- Change Tuning Settings Easily
- Process Variable Set Point Tracking
- Limit Controller Output Range
- Anti-reset Windup
- Four Process Alarms
- Full-featured Faceplate for Numeric and Visual Feedback
- Integrated Auto Tuner

…with IPEmotion Software

- Control Module includes PID, State Machine, Function Generator, Math Functions
- Start, Stop, Hold Trigger for All Control Functions
- Designed for Test Sequencing and Test Bench Control Operations
- Easily Configured Test Sequences using VB or Python Scripts
- Configure with Point and Click Functions on IPEmotion GUI
- Software Usable as Virtual PLC

ReDAQ® Shape Software for MAQ®20

Ideal for data acquisition, monitoring and control; enables users to easily interact with the Dataforth PID loop controller

ReDAQ Shape software for MAQ20 is an easy and efficient development tool as well as an effective way to configure and customize MAQ20 functions for specific application requirements. Faceplates within the software enable an engineer or operator to interact with the PID loop controller.

Key ReDAQ Shape for MAQ20 Features

- 3 Easy Steps to Create Customized Presentation Panels
- No Setup or Configuration Required to Acquire and Analyze Data
- Faceplates for PID Loop Control
- 65 High Quality Toolbox Tools
- Supports Any Graphical File Format
- Integrated, Across-the-Board Applicability
- Most Efficient Way to Configure and Run MAQ20 Systems:
  - Continuous acquisition and burst scan modes
  - Automatically scales data from counts to engineering units
  - Discrete I/O offers 7 special functions: pulse/frequency counter, pulse/frequency counter with de-bounce, waveform measurement, time between events, frequency generator, PWM generator, one-shot pulse generator
  - Assign tag names for any input and output
  - Configure control loops and alarm outputs
  - Three function timer (count-down, 24hr/day, day/time) with 10 programmable events

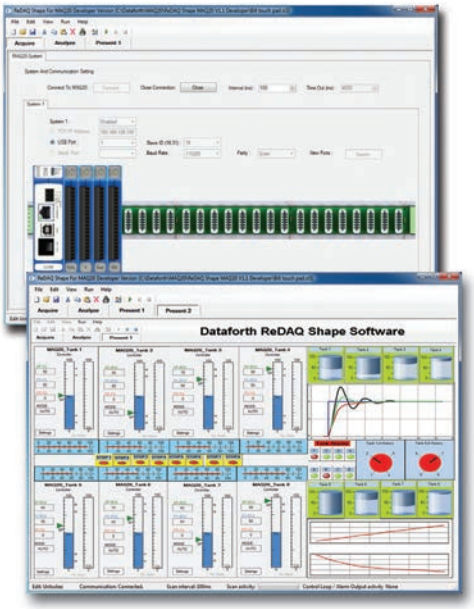

IPEmotion Software for MAQ20

A very advanced, intuitive, high performance and user-friendly data acquisition / test and measurement software designed specifically for industrial and R&D applications

Representing the next step in test and measurement, IPEmotion provides synchronized data acquisition and is easily adaptable to all customer specific requirements. Available in 7 languages, IPEmotion provides automatic recognition of connected devices, automatic configuration of all channels, automatic start of measuring, and instant visualization of all measurement values. PID loop control is an integral part of IPEmotion, and the number of possible loops is limited only by the processing power of the PC.

Key IPEmotion Features

- Live Data Display, Recording, Online and Offline Math and Logic Functions
- One-Click Acquisition
  - Direct hardware detection, data display and recording
- Live Adjustment
  - Analyze and verify measurements during active data acquisition
  - GUI adaptation during active measurement and storage
- PID Loop Control
  - Unlimited Loops Possible
- Data Analysis
- Post Processing and Report Generation
- Easy Drag and Drop HMI Creation
- High Speed Recording to 1000 Samples
- Plug-In Synchronization
- Import and Export Recorded Data to Standard File Formats
- Scripting Option
- Configurable Gauges for Wide Ranging Applications
- Multilingual



8B isoLynx® SLX300 Data Acquisition System

Flexible, Compact, Modular, Reliable

Configure with up to 12 isolated analog input channels, 4 isolated analog output channels, and 8 isolated digital I/O channels

Building on the proven reliability and outstanding performance of the SCM5B isoLynx® SLX200 and miniature-sized SensorLex 8B isolated signal conditioning modules, the 8B isoLynx SLX300 is a compact, low cost solution for wide ranging rugged industrial applications. The system enables mix and match analog and digital I/O at sustained rates of up to 3.0kS/s (100kS/s burst) and supports Modbus® RTU and TCP protocols. The SLX300 also offers 7 advanced special functions and 4 alarm states. The system can be panel or DIN rail mounted.

Key 8B isoLynx SLX300 Features

- Modbus RTU and TCP Support
- 1500Vrms Input-to-Output and Channel-to-Channel Isolation
- 240Vrms Field-Side Protection
- Wide I/O Selection
  - – Analog – 20 product families, 89 models
  - – Digital – 5 product families, 14 models
- Mix & Match Analog & Digital I/O
- Advanced Features Including Alarms, Counters, Timers, PWMs, and more
- –40°C to +85°C Operating Temperature
- Free Configuration Software
- C-UL-US Listed (Class I, Division 2, Groups A, B, C, D)
- CE Compliant
- ATEX Compliance Pending
- Manufactured per RoHS II Directive 2011/65/EU

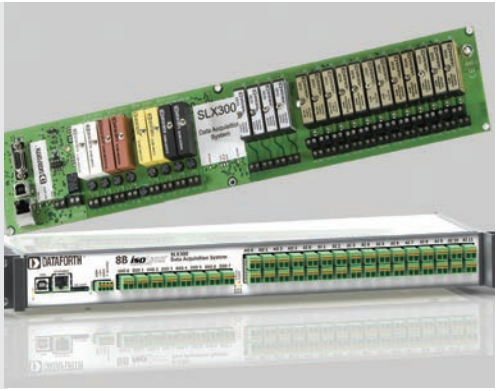

ReDAQ® Shape Software for SLX300

Out-of-the-box DAQ software for the 8B isoLynx SLX300 data acquisition system

ReDAQ Shape software for SLX300 provides the easiest and most efficient development tool to create, save, and open graphical user interface projects for test, process, data collection and data analysis applications. Built-in functions in the software are pre-configured and can be used without setup; just three easy steps are required to create data acquisition and control projects.

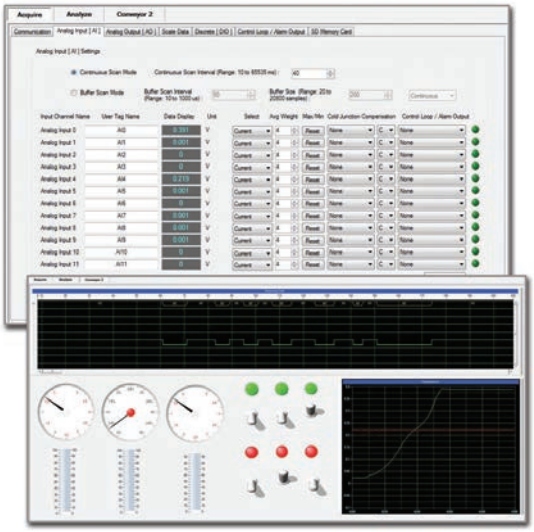

Key ReDAQ Shape for SLX300 Features

- 64 High Quality Toolbox Tools
- 3 Easy Steps to Create Data Acquisition and Control Projects
- Pre-configured Built-in Software Functions
- Supports Any Graphical File Format
- Integrated, Across-the-Board Applicability
- Most Effective Way to Set Up and Configure 8B isoLynx SLX300 Functions:
  - – Continuous and burst scan modes for 12 analog input and 4 analog output channels
  - – Automatically scales data from counts to engineering units
  - – 8 discrete I/O with 7 special functions: pulse/frequency counter, pulse/frequency counter with de-bounce, waveform measurement, time between events, frequency generator, PWM generator, one-shot pulse generator
  - – Customer user tag name for any input and output
  - – Cold Junction Compensation and linearization for thermocouple input modules
  - – Control loop and alarm output
  - – Three function timer (count-down, 24hr/day, day/time) with 10 programmable events

SCM5B isoLynx® SLX200 Data Acquisition System

Fast, Intelligent, Modular, Fully Isolated

Implements industry standard Modbus® RTU and TCP protocols, enabling communication with existing third-party software drivers and HMI/SCADA packages

Fully certified by Modbus-IDA and OPC compatible, the SCM5B isoLynx SLX200 provides superior reliability, accuracy, and isolation for a wide range of rugged industrial applications. The system offers maximum flexibility of analog and digital I/O selection; the modular design combines a 6- or 12-channel I/O Controller base system and optional 8- or 16-channel expansion backplanes, which can be panel or DIN rail mounted. One I/O Controller unit can operate up to 60 channels of differential analog I/O and 128 channels of digital I/O, using Dataforth's SCM5B analog and SCMD digital modules. All I/O is channel-to-channel and input-to-output isolated.

Key SCM5B isoLynx SLX200 Features

- Modbus RTU Support on RS-232 and RS-485
- Modbus TCP Support (optional)
- 1500Vrms Input-to-Output and Channel-to-Channel Isolation
- 240Vrms Field-Side Protection
- Dual Ethernet for Redundancy
- System Expansion to 60 Analog Channels and 128 Discrete Channels
- All I/O Mix and Match Isolated
- Fast 16-Bit A/D, D/A
- Best I/O Selection with 250+ Different I/O Modules
- Drop-in Data Acquisition for Existing Installations
- Two Analog Scan Modes
- –40°C to +85°C Operating Temperature
- Free Configuration Software
- CSA C/US Certified (Class I, Division 2, Groups A, B, C, D)
- CE Compliant
- Manufactured per RoHS II Directive 2011/65/EU



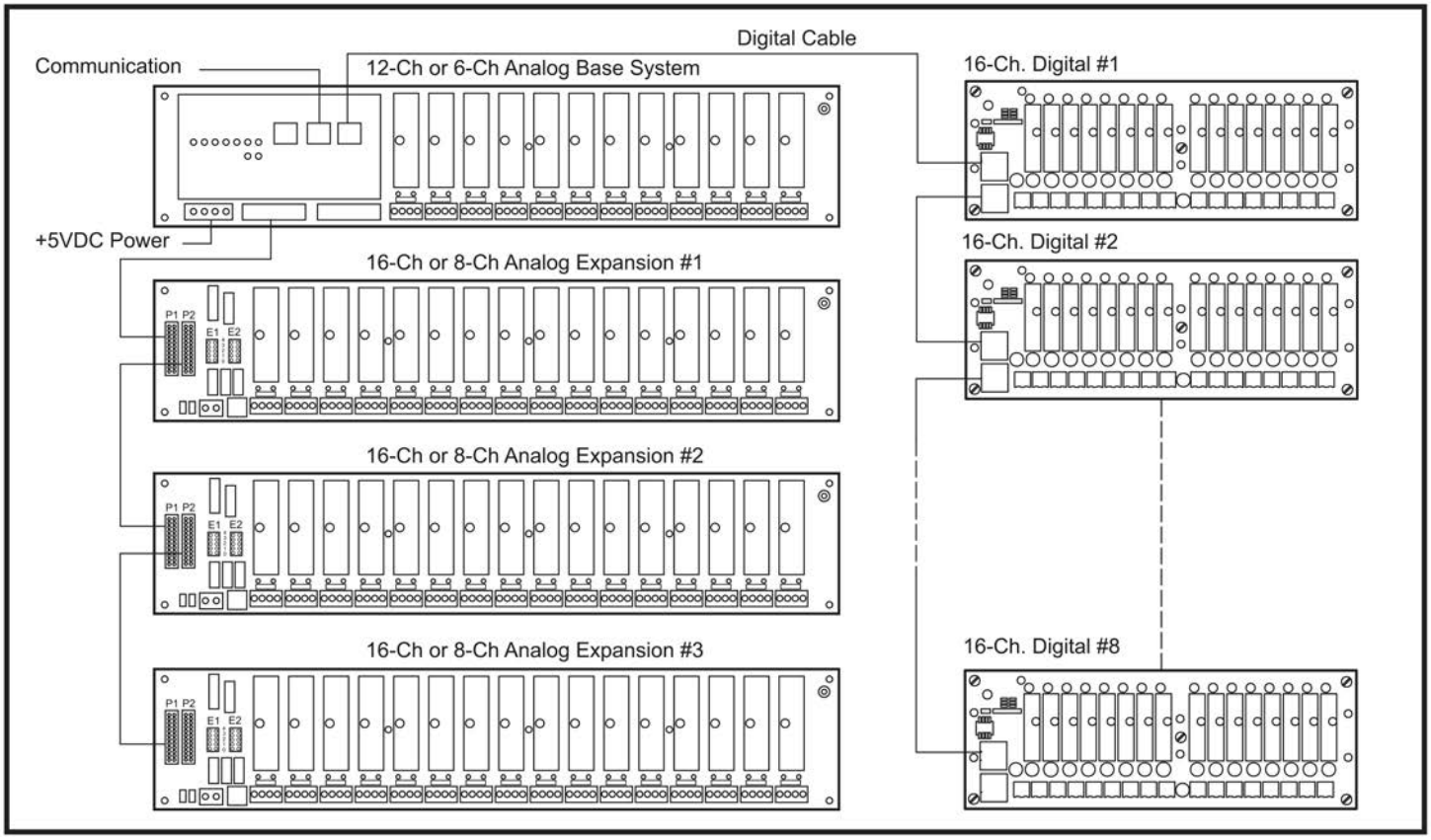

SCM5B isoLynx SLX200 Block Diagram

DSCL and DSCP Industrial Loop Isolators and Transmitters

Passive, Active, Programmable 4 to 20mA Loop Products

Loop and universal AC/DC-powered isolators and transmitters in DIN rail, component, and head-mount packages

This full family includes basic loop-powered isolators, wide-range AC/DC-powered isolators and transmitters, and fixed-gain or hardware and software configurable models. They accept voltage, current, thermocouple, and RTD input signals and provide high-level analog outputs for data acquisition, test and measurement, and control system applications. The compact 6.2mm DSCP dip-switch configurable signal converters are ideal when space is limited.

Key DSCL and DSCP Features

- Signal-Powered Passive Loop Isolator Models
- Jumper, Software, and Dip-Switch Configurable Models
- Wide Range 24V to 60V or 85V to 230V AC/DC-Powered Models
- Isolation Protection to 4000Vrms
- Multiple Channels per Package Available
- PCB, DIN Rail, Panel, and Instrument Head Mounting Options
- CE Compliant
- Manufactured per RoHS II Directive 2011/65/EU

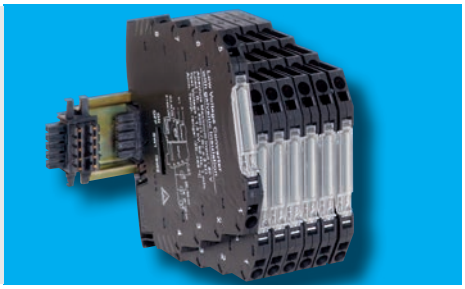

DSCT Loop-Powered Isolated Two-Wire Transmitters

Instrument Class® Performance in a Low Cost DIN Rail Mount Package

7 family groups & 48 transmitter models: economical connections between sensors and control rooms

DSCT 2-wire transmitters condition and send analog signals from sensors located in the field to monitoring and control equipment, usually computers, located thousands of feet away in central control areas. The transmitters accept a wide range of inputs, including millivolt, volt, milliamp, thermocouple, RTD, potentiometer, and slide wire. They operate on power from a 2-wire signal loop and modulate the supply current to represent the input signal within a 4 to 20mA range.



Key DSCT Features

- ±0.03% Accuracy (Typical)
- ±0.01% Linearity
- 1500Vrms Transformer Isolation & 240Vrms Field-Side Protection
- ANSI/IEEE C37.90.1 Transient Protection
- Wide Loop Supply Voltage, 10.8V to 60V
- 5-Pole Low-Pass Filtering
- –40°C to +80°C Operating Temperature
- Mounts on DIN Rail EN 50022, 35x7.5 or 35x15
- CSA C/US Certified (Class I, Division 2, Groups A, B, C, D)
- CE Compliant
- Manufactured per RoHS II Directive 2011/65/EU

Industrial Data Communication Products

Line Drivers and Converters for RS-232, RS-422, and RS-485 Systems

Industrial LANs and data communication systems stretch over long distances, inside and outside, with signals exposed to electrical transients, noise, ground loops, power surges, and lightning. Our heavy duty products “harden” and protect these systems.

Key Data Communication Features

- Protects Equipment from Damage due to Power Surges, Transients, Lightning
- 1500Vrms Isolation with Optocouplers and Power DC-to-DC Converter (3000Vp, 1 min)
- Extends RS-232 Communication Distances without Expensive Low-Capacitance Cabling
- Connects RS-232 Devices to RS-422 and RS-485 Devices
- Data Rates to 115.2kbps
- Distances to 12 Miles (20km)
- 2- or 4-Wire Simplex/Duplex Connection
- CE Compliant
- Manufactured per RoHS II Directive 2011/65/EU

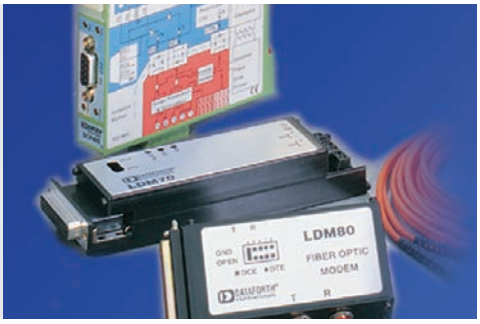

Dataforth Literature & Application Notes

www.dataforth.com/application-notes.aspx

Application Notes

AN101: Measuring RMS Values of Voltage and Current
AN102: Errors, What Are They And How Bad Can They Be
AN103: Common Mode Voltage
AN104: 4-20 mA Transmitters
AN105: RTD, Resistance Temperature Detector
AN106: Introduction To Thermocouples
AN107: Practical Thermocouple Temperature Measurements
AN108: When Good Grounds Go Bad
AN109: Single Phase AC Measurements Revisited
AN110: 3-Phase AC Calculations Revisited
AN111: Current Modules Measure Power Factor
AN112: Filtering in Signal Conditioning Modules, SCMs
AN113: Phase Angles and Time Delays
AN114: Accuracy versus Resolution
AN115: Sampling Law
AN116: Why Use Isolated Signal Conditioners?
AN117: Basic Bridge Circuits
AN118: Strain Gage SCMs
AN119: Six Sigma: What? Why? How?
AN120: Wind Turbines Today
AN121: Low Pass Filter Rise Time vs Bandwidth
AN122: Introduction to PID Control
AN123: Tuning Control Loops for Fast Response
AN124: Tuning Control Loops with the IMC Tuning Method
AN125: Tuning Level Control Loops
AN126: Tuning Surge Tank Level Control Loops
AN127: Op-Amp Errors, Another View
AN128: RMS Revisited
AN129: Harmonics and Utility Costs
AN201: SCM9B/LDM422/485 RS-485 Connection
AN202: LDM485 to LDM485 to Other RS-485 Devices Configuration
AN501: Thermocouple Voltage-To-Temperature Conversion Method
AN502: SCM5B Ground Connections and Host System Interfaces
AN504: Interpreting Drift Specifications
AN505: Hardware Linearization of Non-Linear Signals
AN506: ANSI/IEEE C37.90.1-1989 Transient Specification
AN507: Shield Grounding
AN508: Protecting Signal Lines Against EMI
AN509: SCM5B43 - DC LVDT Input Module
AN701: SCM7B Thermocouple Modules and CJC
AN702: SCM7B Frequency and Time Response
AN704: Failure Rate Calculation and Prediction
AN801: DSCA Calibration Procedure
AN802: DSCA, SCM5B, SCM7B and 8B Failure Rate Calculation and Prediction

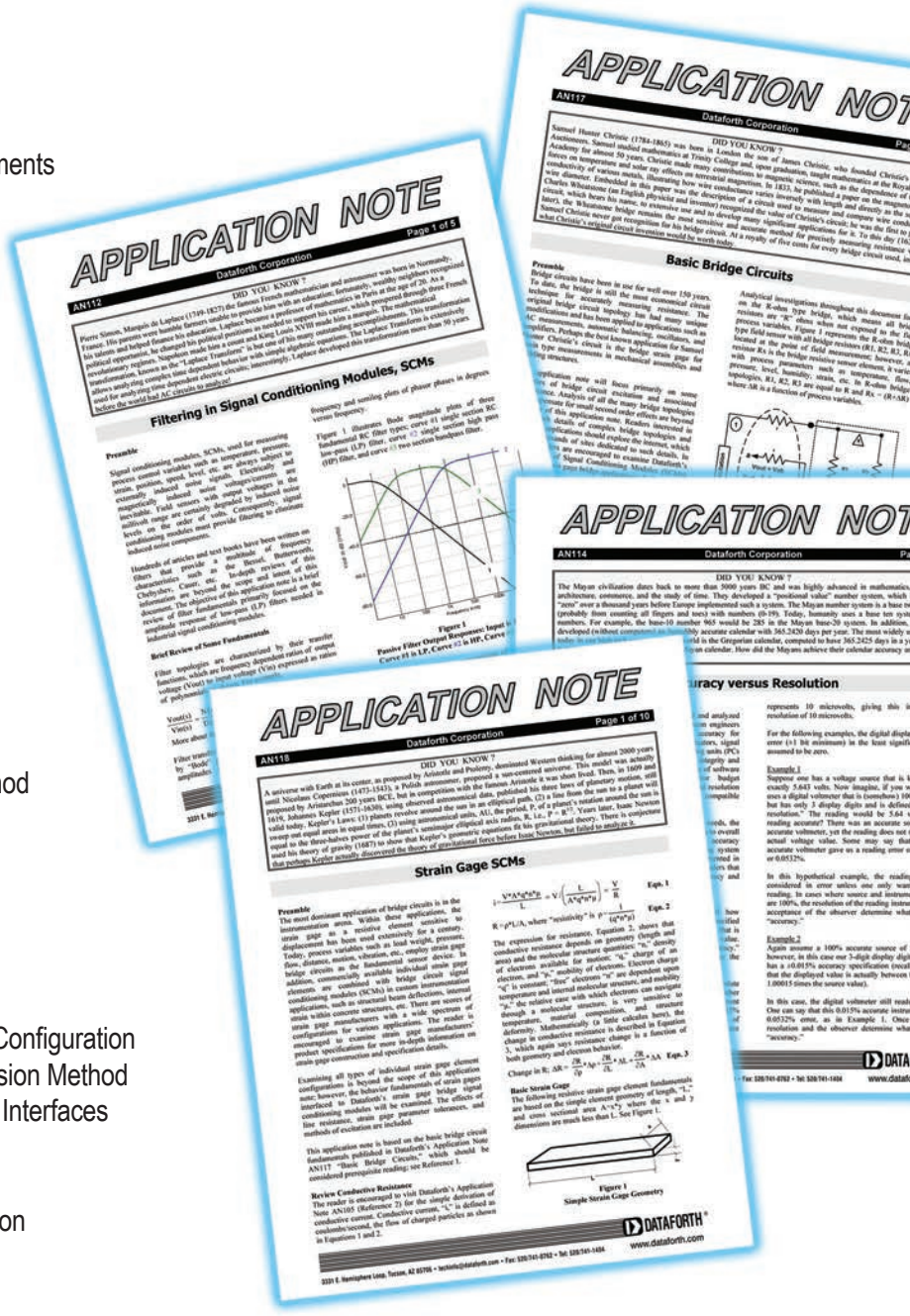

Signal Conditioning Tutorial www.dataforth.com/catalog/pdf/DTF-Tutorial.pdf
Addresses all the 'classic concerns' you should use to plan your next data acquisition or control application.
Corporate Capabilities Brochure www.dataforth.com/catalog/pdf/dataforth_corp_brochure.pdf

The Dataforth System Builder

Dataforth's System Builder is an innovative, interactive online feature that allows you to create your own system, module by module. Based on your stated requirements and parameters, suggestions are automatically given on which products to choose to build the most effective system. Pricing information is continuously updated, thereby enabling you to obtain the best system for your needs at the most cost-effective price.



Visit Dataforth's Full-Service Website: www.dataforth.com

Dataforth's full-service website is an easy-to-use, comprehensive source for sales, product, and applications information. The site includes:

- Fast, accurate parametric search capabilities for all Dataforth industrial signal conditioning, data acquisition, and data communication products
- Online product quote and purchase
- Online product data sheets, application notes, and user manuals
- Direct applications assistance, sales, and customer service help lines readily available
- Latest news on company operations and new products
- Comprehensive signal conditioning, data acquisition, and control tutorial
- Worldwide corporate and sales contact information
- Literature ordering center

Online Help

Online Ordering

Data Sheets

Application Notes

Product Information



Plug-In Panel Products - SCM5B, SCM7B, 8B, SCM9B

Characteristic	SCM5B	SCM7B	8B	SCM9B
Mechanical Format	Modular Plug-in-Board	Modular Plug-in-Board	Modular Plug-in-Board	Plug-in or Hockey Puck
Isolation: Voltage Type	1500Vrms Transformer 3-way	1500Vrms Transformer 2-way	1500Vrms Transformer 2-way	500Vrms Transformer/Optical 2-way
CMR	160dB	110dB	100dB	100dB
NMR (60Hz) Rejection	95dB (4Hz Modules)	85dB (3Hz Modules)	70dB	Software Configurable
Bandwidth	4Hz to 10kHz	3Hz to 10kHz	3Hz to 20kHz	Software Configurable
Filter	6-Pole	5-Pole	3- to 5-Pole	Digital
Input Voltage Withstand	240Vrms	120Vrms	240Vrms	120 or 250Vrms
Input Signals	(1)	(2)	(1)	(3)
Output Range to System	0-5VDC, 0-10VDC, ±5VDC, ±10VDC, 0-1mA, 0-20mA, 4-20mA	1-5VDC, 0-5VDC, 0-10VDC, ±10VDC	0-5VDC, ±5VDC	RS-232 or RS-485
Output Range to Field	4-20mA, 0-20mA, ±20mA, ±5VDC, ±10VDC, 0-5VDC, 0-10VDC	±10VDC, 4-20mA, 0-20mA	4-20mA, 0-20mA, ±20mA, ±5VDC, ±10VDC, 0-5VDC, 0-10VDC	4-20mA, 0-20mA, 0-1VDC, ±1VDC, 0-5VDC, ±5VDC, 0-10VDC, ±10VDC
Gain/Offset Adjust	Fixed	Fixed	Fixed	Auto Zero, Auto Cal
Accuracy	0.03% Typical	0.03% Typical	0.05% Typical	0.02% Typical
Output Control	Enable/Disable	Always Enabled	Always Enabled	RS-232 or RS-485
Supply Voltage	+5VDC ±5% at 30-350mA	14-35VDC (+24V Nom) at 12-70mA	+5VDC ±5% at 25-225mA	12-30VDC at 0.75W Max
Dimensions (h)(w)(d)	2.28" x 2.26" x 0.6" 58mm x 57mm x 15mm	2.13" x 1.7" x 0.6" 54.1mm x 43.3mm x 15.4mm	1.11" x 1.65" x 0.4" 28.1mm x 41.9mm x 10.2mm	3.60" x 2.45" x 1.10" 91.4mm x 62.2mm x 27.9mm
Interface	14-Pin	5- or 6-Pin	5-, 6- or 7-Pin	10- or 20-Pos Term Block
Customization	Yes	Yes	Yes	No

Din Rail, Head Mount Products - DSCA, DSCT, DSCL, DSCP

Characteristic	DSCA	DSCT	DSCL	DSCP
Mechanical Format	DIN Rail Mount	DIN Rail Mount	DIN Rail, Component, Panel	DIN Rail, Head Mount
Isolation: Voltage Type	1500Vrms Transformer 3-way	1500Vrms Transformer 3-way	500Vrms to 4000Vrms Transformer/Optical	Non/1500Vrms/2300Vrms Transformer/Optical 3-way
CMR	160dB	160dB	70-110dB	Consult Data Sheet
NMR (60Hz) Rejection	85dB (3Hz Modules)	85dB (3Hz XMTRs)	20dB/Decade	SW or Dip-Switch Config
Bandwidth	3Hz to 3kHz	3Hz	5Hz to 750Hz	SW or Dip-Switch Config
Filter	6-Pole	6-Pole	2-Pole	SW or Dip-Switch Config
Input Voltage Withstand	240Vrms	240Vrms	N/A	N/A
Input Signals	(1)	(5)	0/4-20mA	(4)
Output Range to System	0-10VDC, ±10VDC, 0-1mA 4-20mA, 0-20mA	4-20mA	0/4-20mA, V, & Selectable	SW or Dip-Switch Config
Output Range to Field	4-20mA, 0-20mA, ± 20mA, ±10VDC, 0-10VDC	N/A	N/A	N/A
Gain/Offset Adjust	±5%	±10%	±10% on Some Models	Software Configurable
Accuracy	0.03% Typical	0.03% Typical	0.05% to 0.1% Typical	0.1% Typical
Output Control	Always Enabled	Always Enabled	Always Enabled	Always Enabled
Supply Voltage	15-30VDC (+24V Nom) at 25-80mA	10.8-100VDC Loop at 4-20mA	24VDC Loop at 4-20mA	24VDC Loop, or 24 to 230VDC/VAC
Dimensions (h)(w)(d)	2.95" x 0.89" x 4.13" 75mm x 22.5mm x 105mm	2.95" x 0.89" x 4.13" 75mm x 22.5mm x 105mm	Consult Data Sheet	Consult Data Sheet
Interface	8-Pos Term Block	6-Pos Term Block	Terminal Block	Terminal Block
Customization	Yes	Yes	No	SW or Dip-Switch Config

NOTES:
(1) V, I, RTD, TC, Potentiometer, Strain, True RMS, 2-wire, Frequency
(2) V, I, RTD, TC, Potentiometer, 2-wire
(3) V, I, RTD, TC, Frequency, Digital I/O
(4) V, I, RTD, TC
(5) V, I, RTD, TC, Potentiometer

©1995-2017 Dataforth Corporation, All Rights Reserved ISO9001:2008-Registered QMS

SCM5B

Isolated SCM5B Analog Signal Conditioning Products

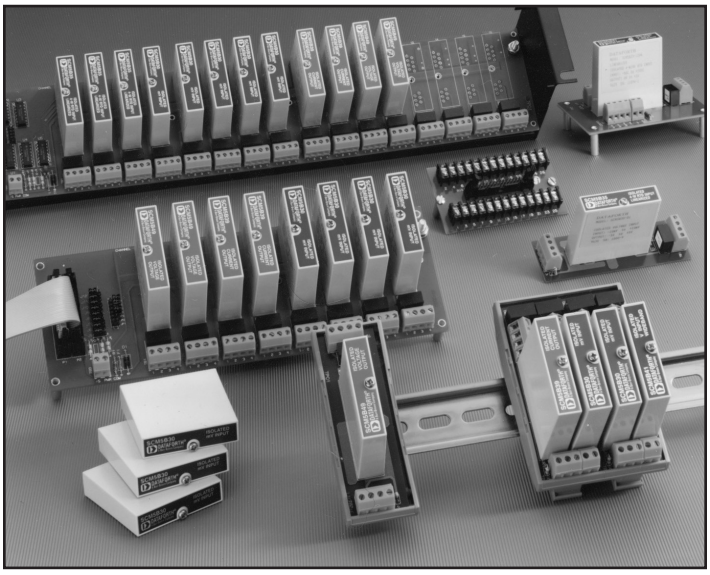

SCM5B Modules

Dataforth Corporation offers cost-effective, isolated industrial signal conditioning modules. The SCM5B analog modules are form, fit, and functional equivalents to similar products from other manufacturers. The product line includes a complete selection of backpanel options, interface cables, racks, fuses, jumpers, power supplies, and other accessory items.

Improved SCM5B Analog Modules

Each SCM5B module provides a single channel of isolated analog input or output. Input modules interface to all types of external sensors. The modules filter, isolate, amplify, and convert the input signal to a high-level analog voltage output. The output modules accept a high-level analog voltage signal from a host system, then buffer, isolate, and amplify before providing a process current or voltage output to field devices. Over 250 different SCM5B modules are available encompassing a wide selection of isolated analog input and output functions. Analog inputs include voltage and current in narrow and wide bandwidths, thermocouple, RTD, accelerometer, potentiometer, strain gage, frequency and 2-wire transmitter. Custom I/O ranges are also available. All modules are CSA C/US certified for safe operation in Class I, Division 2, Groups A, B, C, and D hazardous environments. They are also CE and ATEX compliant.

Accessories include addressable and non-addressable single, dual, 8- and 16- channel backpanels which include on-board temperature sensors and cold junction thermocouple compensation, power supplies, mounting racks, interface cables, and evaluation boards.

Dataforth SCM5B modules offer several advantages when compared with competitive parts, while maintaining equivalent price:

- **50 times better** noise rejection by using a **6-pole filter** with 95dB NMR, versus a 3-pole filter with 60dB NMR
- Lower output noise
- True 3-way isolation
- **20dB better** CMR of noise spikes than competing models

Features

- ±0.03% Accuracy (Typical)
- ±0.005% Linearity
- 1500Vrms Transformer Isolation & 240Vrms Field-side Protection
- ANSI/IEEE C37.90.1 Transient Protection
- 5V Power (30mA Typical)
- 4- to 6-Pole Low-Pass Filtering
- Up to 160dB CMR
- 95dB NMR at 60Hz, 90dB at 50Hz
- ±1µV°C Drift
- Output Noise as Low as 150µVrms
- –40°C to +85°C Operating Temperature
- CSA C/US Certified (Class I, Division 2, Groups A, B, C, D)
- CE and ATEX Compliant
- Manufactured per RoHS II Directive 2011/65/EU

Applications

- Designed for Industrial Plant Environments
- Protects User Equipment from Lightning and Heavy Equipment Power-Line Voltage
- Reduces Electrical Noise in Measured Signals
- Convenient System Expansion and Repair

Custom Signal Conditioning

Custom modules are available: consult factory for minimum quantity and pricing details on custom input ranges, output ranges, bandwidth, and other key parameters.

©1995-2017 Dataforth Corporation, All Rights Reserved ISO9001:2008-Registered QMS

SCM5B Selection Guide

ANALOG VOLTAGE INPUT MODULES, NARROW BANDWIDTH (4Hz BW) Page 6

MODEL	INPUT RANGE	OUTPUT RANGE †	
SCM5B30-01	±10mV	1, 2	
SCM5B30-02	±50mV	1, 2	
SCM5B30-03	±100mV	1, 2	
SCM5B30-04	±10mV	3, 4	
SCM5B30-05	±50mV	3, 4	
SCM5B30-06	±100mV	3, 4	
SCM5B30-07	±1V	1, 2	High Input Z
SCM5B31-01	±1V	1, 2	
SCM5B31-02	±5V	1, 2	
SCM5B31-03	±10V	1, 2	
SCM5B31-04	±1V	3, 4	
SCM5B31-05	±5V	3, 4	
SCM5B31-06	±10V	3, 4	
SCM5B31-07	±20V	1, 2	
SCM5B31-08	±20V	3, 4	
SCM5B31-09	±40V	1, 2	
SCM5B31-10	±40V	3, 4	

ANALOG CURRENT INPUT MODULES, 4Hz AND 1kHz BANDWIDTH Pages 8 and 26

MODEL	INPUT RANGE	OUTPUT RANGE †	BW
SCM5B32-01	4 to 20mA	3, 4	4Hz
SCM5B32-02	0 to 20mA	3, 4	4Hz
SCM5B392-11	4 to 20mA	0 to +5V	1kHz
SCM5B392-12	4 to 20mA	±5V	1kHz
SCM5B392-13	4 to 20mA	0 to +10V	1kHz
SCM5B392-14	4 to 20mA	±10V	1kHz

ISOLATED TRUE RMS INPUT MODULES Page 10

MODEL	INPUT (rms)	OUTPUT RANGE (dc)†
SCM5B33-01	0-100mV	3, 4, 5, 6, 7
SCM5B33-02	0-1V	3, 4, 5, 6, 7
SCM5B33-03	0-10V	3, 4, 5, 6, 7
SCM5B33-04	0-150V	3, 4, 5, 6, 7
SCM5B33-05	0-300V	3, 4, 5, 6, 7
SCM5B33-06	0-1A	3, 4, 5, 6, 7
SCM5B33-07	0-5A	3, 4, 5, 6, 7

LINEARIZED 2- OR 3-WIRE RTD INPUT MODULES (0 to +5V OUTPUT†, 4Hz BW) Page 12

MODEL	TYPE**	INPUT RANGE	OUTPUT RANGE †
SCM5B34-01	100Ω Pt	–100°C to +100°C (–148°F to +212°F)	3, 4
SCM5B34-02	100Ω Pt	0°C to +100°C (+32°F to +212°F)	3, 4
SCM5B34-03	100Ω Pt	0°C to +200°C (+32°F to +392°F)	3, 4
SCM5B34-04	100Ω Pt	0°C to +600°C (+32°F to +1112°F)	3, 4
SCM5B34-05	100Ω Pt	–100°C to +200°C (–148°F to +392°F)	3, 4
SCM5B34C-01	10Ω Cu at 0°C	0°C to +120°C (+32°F to +248°F)	3, 4
SCM5B34C-02	10Ω Cu at 25°C	0°C to +120°C (+32°F to +248°F)	3, 4
SCM5B34C-03	10Ω Cu at 0°	0°C to +160°C (+32°F to +320°F)	3, 4
SCM5B34N-01	120Ω Ni	0°C to +300°C (+32°F to +572°F)	3, 4

LINEARIZED 4-WIRE RTD INPUT MODULES (0 to +5V OUTPUT†, 4Hz BW) Page 14

MODEL	TYPE**	INPUT RANGE	OUTPUT RANGE†
SCM5B35-01	100Ω Pt	–100°C to +100°C (–148°F to +212°F)	3, 4
SCM5B35-02	100Ω Pt	0°C to +100°C (+32°F to +212°F)	3, 4
SCM5B35-03	100Ω Pt	0°C to +200°C (+32°F to +392°F)	3, 4
SCM5B35-04	100Ω Pt	0°C to +600°C (+32°F to +1112°F)	3, 4
SCM5B35-05	100Ω Pt	–100°C to +200°C (–148°F t o +392°F)	3, 4
SCM5B35C-01	10Ω Cu at 0°C	0°C to +120°C (+32°F to +248°F)	3, 4
SCM5B35C-02	10Ω Cu at 25°C	0°C to +120°C (+32°F to +248°F)	3, 4
SCM5B35C-03	10Ω Cu at 0°C	0°C to +160°C (+32°F to +320°F)	3, 4
SCM5B35N-01	120Ω Ni	0°C to +300°C (+32°F to +572°F)	3, 4

POTENTIOMETER INPUT MODULES (4Hz BW) Page 16

MODEL	INPUT RANGE	OUTPUT RANGE†
SCM5B36-01	0 to 100Ω	3, 4
SCM5B36-02	0 to 500Ω	3, 4
SCM5B36-03	0 to 1kΩ	3, 4
SCM5B36-04	0 to 10kΩ	3, 4

THERMOCOUPLE INPUT MODULES (0 to +5V OUTPUT†, 4Hz BW) Page 18

MODEL	TYPE‡	INPUT RANGE	OUTPUT RANGE†
SCM5B37J	J	–100°C to +760°C (–148°F to +1400°F)	3, 4
SCM5B37K	K	–100°C to +1350°C (–148°F to +2462°F)	3, 4
SCM5B37T	T	–100°C to +400°C (–148°F to +752°F)	3, 4
SCM5B37E	E	0°C to +900°C (+32°F to +1652°F)	3, 4
SCM5B37R	R	0°C to +1750°C (+32°F to +3182°F)	3, 4
SCM5B37S	S	0°C to +1750°C (+32°F to +3182°F)	3, 4
SCM5B37B	B	0°C to +1800°C (+32°F to +3272°F)	3, 4
SCM5B37C	C	+350°C to +1300°C (+662°F to +2372°F)	3, 4
SCM5B37N	N	–100°C to +1300°C (–148°F to +2372°F)	3, 4

STRAIN GAGE INPUT MODULES (±5V OUTPUT†, 4Hz or 10kHz BW) Pages 20 and 22

MODEL		INPUT	EXCITATION	OUTPUT RANGE†
10kHz	4Hz			
SCM5B38-01	-31	±10mV Full Bridge Input, (3mV/V)	+3.333V	1, 2
SCM5B38-02	-32	±30mV Full Bridge Input, (3mV/V)	+10.000V	1, 2
SCM5B38-03	-33	±10mV Half Bridge Input, (3mV/V)	+3.333V	1, 2
SCM5B38-04	-34	±30mV Half Bridge Input, (3mV/V)	+10.000V	1, 2
SCM5B38-05	-35	±20mV Full Bridge Input, (2mV/V)	+10.000V	1, 2
SCM5B38-06	-36	±33.3mV Full Bridge Input, (10mV/V)	+3.333V	1, 2
SCM5B38-07	-37	±100mV Full Bridge Input, (10mV/V)	+10.000V	1, 2

ANALOG CURRENT OUTPUT MODULES, 400Hz AND 1kHz BANDWIDTH Pages 24 and 26

MODEL	INPUT RANGE	OUTPUT RANGE	BW
SCM5B39-01	0 to +5V	4 to 20mA	400Hz
SCM5B39-02	±5V	4 to 20mA	400Hz
SCM5B39-03	0 to +5V	0 to 20mA	400Hz
SCM5B39-04	±5V	0 to 20mA	400Hz
SCM5B39-05	0 to 20mA	0 to 20mA	400Hz
SCM5B39-07	±10V	±20mA	275Hz
SCM5B392-01	0 to +5V	4 to 20mA	1kHz
SCM5B392-02	±5V	4 to 20mA	1kHz
SCM5B392-03	0 to +10V	4 to 20mA	1kHz
SCM5B392-04	±10V	4 to 20mA	1kHz

©1995-2017 Dataforth Corporation, All Rights Reserved ISO9001:2008-Registered QMS

SCM5B Selection Guide (Continued)

MATCHED PAIR SERVO/MOTOR CONTROLLER DRIVERS (1kHz BW) Page 26

MODEL	INPUT RANGE	INTERFACE	OUTPUT RANGE
SCM5B392-0111	0 to +5V	4 to 20mA	0 to +5V
SCM5B392-0212	±5V	4 to 20mA	±5V
SCM5B392-0313	0 to +10V	4 to 20mA	0 to +10V
SCM5B392-0414	±10V	4 to 20mA	±10V

ANALOG VOLTAGE INPUT MODULES, WIDE BANDWIDTH (10kHz BW) Page 28

MODEL	INPUT RANGE	OUTPUT RANGE †	
SCM5B40-01	±10mV	1, 2	
SCM5B40-02	±50mV	1, 2	
SCM5B40-03	±100mV	1, 2	
SCM5B40-04	±10mV	3, 4	
SCM5B40-05	±50mV	3, 4	
SCM5B40-06	±100mV	3, 4	
SCM5B40-07	±1V	1, 2	High Input Z
SCM5B41-01	±1V	1, 2	
SCM5B41-02	±5V	1, 2	
SCM5B41-03	±10V	1, 2	
SCM5B41-04	±1V	3, 4	
SCM5B41-05	±5V	3, 4	
SCM5B41-06	±10V	3, 4	
SCM5B41-07	±20V	1, 2	
SCM5B41-08	±20V	3, 4	
SCM5B41-09	±40V	1, 2	
SCM5B41-10	±40V	3, 4	

2-WIRE TRANSMITTER INTERFACE MODULES (100Hz BW) Page 30

MODEL	INPUT RANGE	OUTPUT RANGE
SCM5B42-01	4 to 20mA	+1 to +5V
SCM5B42-02	4 to 20mA	+2 to +10V

GENERAL PURPOSE INPUT MODULES, DC EXCITATION Page 32

MODEL	MAXIMUM INPUT	OUTPUT†
SCM5B43-01	±1V	1, 2
SCM5B43-02	±2V	1, 2
SCM5B43-03	±3V	1, 2
SCM5B43-04	±4V	1, 2
SCM5B43-05	±5V	1, 2
SCM5B43-06	±6V	1, 2
SCM5B43-07	±7V	1, 2
SCM5B43-08	±8V	1, 2
SCM5B43-09	±9V	1, 2
SCM5B43-10	±10V	1, 2

FREQUENCY INPUT MODULES Page 34

MODEL		INPUT RANGE	OUTPUT RANGE†
±20mV HYST.	±400mV HYST.		
SCM5B45-01	SCM5B45-21	0 to 500Hz	3, 4
SCM5B45-02	SCM5B45-22	0 to 1kHz	3, 4
SCM5B45-03	SCM5B45-23	0 to 3kHz	3, 4
SCM5B45-04	SCM5B45-24	0 to 5kHz	3, 4
SCM5B45-05	SCM5B45-25	0 to 10kHz	3, 4
SCM5B45-06	SCM5B45-26	0 to 25kHz	3, 4
SCM5B45-07	SCM5B45-27	0 to 50kHz	3, 4
SCM5B45-08	SCM5B45-28	0 to 100kHz	3, 4

LINEARIZED THERMOCOUPLE INPUT MODULES (0 to +5V OUTPUT†, 4Hz BW) Page 36

MODEL	TYPE‡	INPUT RANGE	OUTPUT RANGE †
SCM5B47J-01	J	0°C to +760°C (+32°F to +1400°F)	3, 4
SCM5B47J-02	J	–100°C to +300°C (–148°F to +572°F)	3, 4
SCM5B47J-03	J	0°C to +500°C (+32°F to +932°F)	3, 4
SCM5B47K-04	K	0°C to +1000°C (+32°F to +1832°F)	3, 4
SCM5B47K-05	K	C0°C to +500°C (+32°F to +932°F)	3, 4
SCM5B47T-06	T	–100°C to +400°C (–148°F to +752°F)	3, 4
SCM5B47T-07	T	0°C to +200°C (+32°F to +392°F)	3, 4
SCM5B47E-08	E	0°C to +1000°C (+32°F to +1832°F)	3, 4
SCM5B47R-09	R	+500°C to +1750°C (+932°F to +3182°F)	3, 4
SCM5B47S-10	S	+500°C to +1750°C (+932°F to +3182°F)	3, 4
SCM5B47B-11	B	+500°C to +1800°C (+932°F to +3272°F)	3, 4
SCM5B47J-12	J	–100°C to +760°C (–148°F to +1400°F)	3, 4
SCM5B47K-13	K	–100°C to +1350°C (–148°F to +2462°F)	3, 4
SCM5B47K-14	K	0°C to +1200°C (+32°F to +2192°)	3, 4
SCM5B47N-15	N	–100°C to +1300°C (–148°F to +2372°F)	3, 4

ACCELEROMETER INPUT MODULES (2.5kHz to 20kHz BW) Page 38
Gain, bandwidth, and excitation are switch-programmable

MODEL	INPUT RANGE	OUTPUT RANGE
SCM5B48-01	±10V max	±10V
SCM5B48-02	±10V max	±5V

VOLTAGE OUTPUT MODULES, 50mA DRIVE CAPACITY (400 Hz BW) Page 40

MODEL	INPUT RANGE	OUTPUT RANGE
SCM5B49-01	0 to +5V	±5V
SCM5B49-02	±5V	±5V
SCM5B49-03	±5V	0 to +5V
SCM5B49-04	0 to +10V	±10V
SCM5B49-05	±10V	±10V
SCM5B49-06	±10V	0 to +10V
SCM5B49-07	±5V	±10V

VOLTAGE ATTENUATOR SYSTEM Page 43
The SCMVAS is a two module system - see data sheet for selection of second module.

MODEL	INPUT RANGE	OUTPUT RANGE
SCMVAS-M100	±100V (70VAC Max)	±1V
SCMVAS-M200	±200V (141VAC Max)	±1V
SCMVAS-M300	±300V (212VAC Max)	±1V
SCMVAS-M400	±400V (282VAC Max)	±1V
SCMVAS-M500	±500V (353VAC Max)	±1V
SCMVAS-M600	±600V (424VAC Max)	±1V
SCMVAS-M650	±650V (460VAC Max)	±1V
SCMVAS-M700	±700V (495VAC Max)	±1V
SCMVAS-MPT	1 to 1	

MODEL	DESCRIPTION
SCMVAS-PB8	Backpanel, 8-Channel
SCMVAS-PB8D	Backpanel, 8-Channel, DIN Rail Mount
SCMVAS-PB16	Backpanel, 16-Channel
SCMVAS-PB16D	Backpanel, 16-Channel, DIN Rail Mount

©1995-2017 Dataforth Corporation, All Rights Reserved ISO9001:2008-Registered QMS

SCM5B Selection Guide (Continued)

ACCESSORIES Starts on Page 48

MODEL	DESCRIPTION
SCMPB01	Non-multiplexed,16-channel backpanel.
SCMPB01-1	Non-multiplexed, 16-channel backpanel, no CJC.
SCMPB01-2	SCMPB01 with DIN rail mounting option.
SCMPB01-3	SCMPB01-1 with DIN rail mounting option.
SCMPB02	Multiplexed, 16-channel backpanel.
SCMPB02-1	Multiplexed, 16-channel backpanel, no CJC.
SCMPB02-2	SCMPB02 with DIN rail mounting option.
SCMPB02-3	SCMPB02-1 with DIN rail mounting option.
SCMPB03	Single channel backpanel. Mounting hardware not included.
SCMPB03-2	SCMPB03 with DIN rail mounting hardware.
SCMPB04	Dual channel backpanel. Mounting hardware not included.
SCMPB04-1	Dual channel backpanel, DIN rail mount, no CJC.
SCMPB04-2	SCMPB04 with DIN rail mounting hardware.
SCMPB04-3	SCMPB04-1 with DIN rail mounting hardware.
SCMXBEFE	Base element with snap foot.
SCMXBE	Base element without snap foot.
SCMXSE	Side element.
SCMXVS	Connection pins.
SCMPB05	Non-multiplexed, 8-channel backpanel.
SCMPB05-1	Non-multiplexed, 8-channel backpanel, no CJC.
SCMPB05-2	SCMPB05 with DIN rail mounting option.
SCMPB05-3	SCMPB05-1 with DIN rail mounting option.
SCMPB06	Multiplexed, 8-channel backpanel.
SCMPB06-1	Multiplexed, 8-channel backpanel, no CJC.
SCMPB06-2	SCMPB06 with DIN rail mounting option.
SCMPB06-3	SCMPB06-1 with DIN rail mounting option.
SCMPB07	8-channel high-density backpanel.
SCMPB07-1	SCMPB07, no CJC.
SCMPB07-2	SCMPB07, DIN rail mount.
SCMPB07-3	SCMPB07, no CJC, DIN rail mount.
SCMXEV	Single channel SCM5B evaluation board.
SCMXCA004-01,-02	System interface cable for both analog backpanels.
SCMXRK-002	19-inch metal rack for mounting analog backpanels.
SCMXIF	Ribbon cable to screw terminal interface board.
SCMXIF-DIN	Universal Interface Board.
SCMXCJC	Encapsulated cold junction compensation circuit.
SCM5BPT	Non-isolated signal pass thru module.
SCMXJP-003	Package of 10 jumpers.
SCMXR1	Precision 20Ω resistor for SCM5B32 and SCM5B42.
SCM5B-PROTO	Breadboard Kit.
SCMXRAIL1-XX	DIN EN50022-35x7.5 (slotted steel), length -XX in meters.
SCMXRAIL2-XX	DIN EN50035-G32 (slotted steel), length -XX in meters.
SCMXRAIL3-XX	DIN EN50022-35x15 (slotted steel), length -XX in meters.
SCMXPRT-001	Power supply, 1A, 5VDC, 120VAC U.S.
SCMXPRT-001D	SCMXPRT-001 with DIN rail mounting option.
SCMXPRE-001	Power supply, 1A, 5VDC, 220VAC European.
SCMXPRE-001D	SCMXPRE-001 with DIN rail mounting option.
SCMXPRT-003	Power supply, 3A, 5VDC, 120VAC U.S.
SCMXPRE-003	Power supply, 3A, 5VDC, 220VAC European.

NOTES:

† OUTPUT RANGES AVAILABLE

Output Range	Part No. Suffix	Example
1. –5V to +5V	NONE	SCM5B30-01
2. –10V to +10V	D	SCM5B30-01D
3. 0V to +5V	NONE	SCM5B30-04
4. 0V to +10V	D	SCM5B30-04D
5. 4 to 20mA	C	SCM5B33-01C
6. 0 to 20mA	E	SCM5B33-01E
7. 0 to 1mA	B	SCM5B33-01B

‡ THERMOCOUPLE ALLOY COMBINATIONS

Standards: DIN IEC 584, ANSI MC96-1-82, JIS C 1602-1981

TYPE	MATERIAL
J	Iron vs. Copper-Nickel
K	Nickel-Chromium vs. Nickel-Aluminum
T	Copper vs. Copper-Nickel
E	Nickel-Chromium vs. Copper-Nickel
R	Platinum-13% Rhodium vs. Platinum
S	Platinum-10% Rhodium vs. Platinum
B	Platinum-30% Rhodium vs.Platinum-6%Rhodium
C	Tungsten-5% Rhenium vs. Tungsten-26% Rhenium
N	Nickel-14.2% Chromium-1.4% Silicon vs. Nickel-4.4% Silicon-0.1% Magnesium

****RTD STANDARDS**

TYPE	ALPHA COEFFICIENT	DIN	JIS	IEC
100Ω Pt	0.00385	DIN 43760	JIS C 1604-1989	IEC 751
120Ω Ni	0.00672			
10Ω CU	0.004274			

©1995-2017 Dataforth Corporation, All Rights Reserved ISO9001:2008-Registered QMS

SCM5B30/31

Analog Voltage Input Modules, Narrow Bandwidth

Description

Each SCM5B30 and SCM5B31 voltage input module provides a single channel of analog input which is filtered, isolated, amplified, and converted to a high-level analog voltage output (Figure 1). This voltage output is logic-switch controlled, allowing these modules to share a common analog bus without the requirement of external multiplexers.

The SCM5B modules are designed with a completely isolated computer side circuit which can be floated to ±50V from Power Common, pin 16. This complete isolation means that no connection is required between I/O Common and Power Common for proper operation of the output switch. If desired, the output switch can be turned on continuously by simply connecting pin 22, the Read-Enable pin, to I/O Common, pin 19.

Signal filtering is accomplished with a six-pole filter which provides 95dB of normal-mode rejection at 60Hz and 90dB at 50Hz. Two poles of this filter are on the field side of the isolation barrier, and the other four are on the computer side.

After the initial field-side filtering, the input signal is chopped by a proprietary chopper circuit. Isolation is provided by transformer coupling, again using a proprietary technique to suppress transmission of common mode spikes or surges. The module is powered from +5VDC, ±5%.

A special input circuit on the SCM5B30 and SCM5B31 modules provides protection against accidental connection of power-line voltages up to 240VAC.

Features

- Accepts Millivolt and Voltage Level Signals
- High-Level Voltage Outputs
- 1500Vrms Transformer Isolation
- ANSI/IEEE C37.90.1 Transient Protection
- Input Protected to 240VAC Continuous
- 160dB CMR
- 95dB NMR at 60Hz, 90dB at 50Hz
- ±0.03% Accuracy
- ±0.005% Linearity
- ±1µV/°C Drift
- CSA C/US Certified
- CE and ATEX Compliant
- Mix and Match SCM5B Types on Backpanel

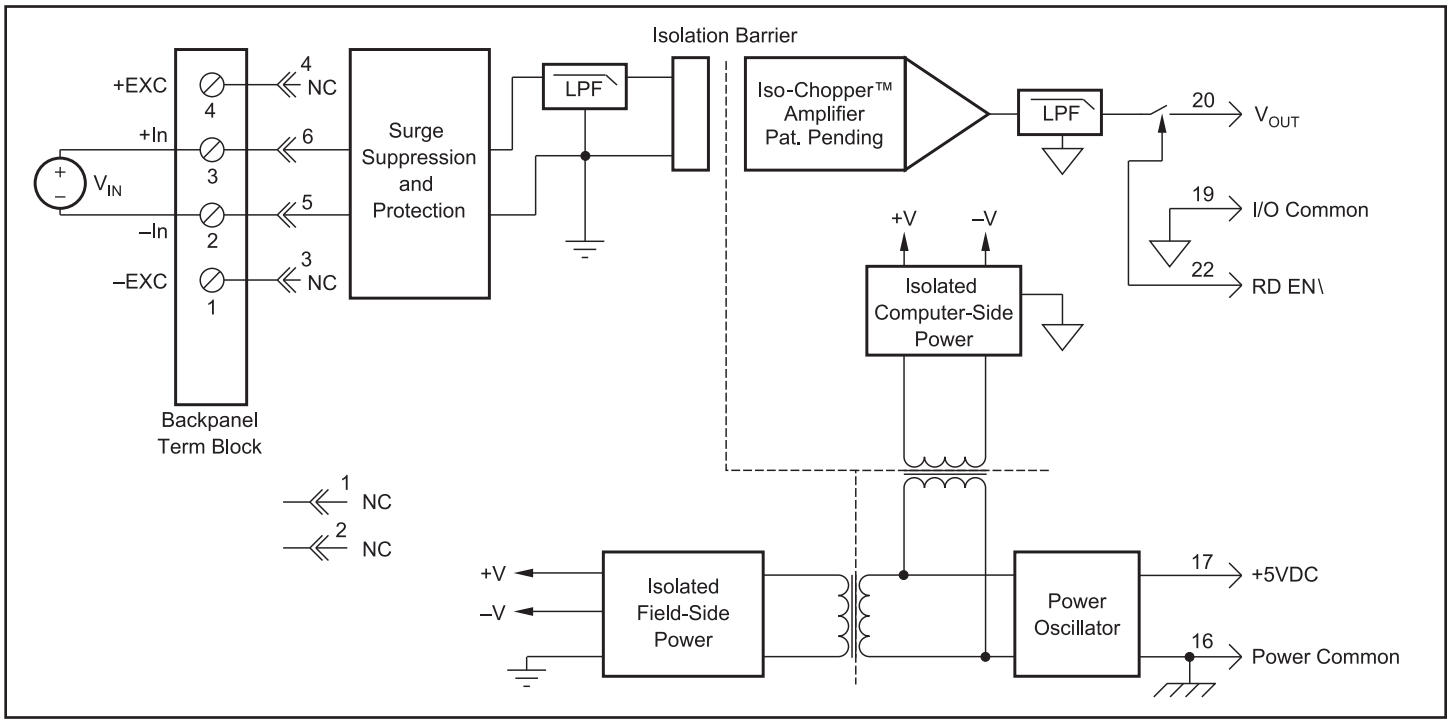

Figure 1: SCM5B30/31 Block Diagram

©1995-2017 Dataforth Corporation, All Rights Reserved ISO9001:2008-Registered QMS

Specifications

Typical* at T_A = +25°C and +5VDC power

Module	SCM5B30	SCM5B31
Input Range	±10mV to ±1V	±1V to ±40V
Input Bias Current	±0.5nA	±0.05nA
Input Resistance		
Normal	50MΩ	650kΩ (-01 thru -06) 2MΩ (-07 thru -10)
Power Off	40kΩ	650kΩ (-01 thru -06) 2MΩ (-07 thru -10)
Overload	40kΩ	650kΩ (-01 thru -06) 2MΩ (-07 thru -10)
Input Protection		
Continuous	240Vrms max	*
Transient	ANSI/IEEE C37.90.1	*
CMV, Input to Output		
Continuous	1500Vrms max	*
Transient	ANSI/IEEE C37.90.1	*
CMR (50Hz or 60Hz)	160dB	*
NMR	95dB at 60Hz, 90dB at 50Hz	*
Accuracy(1)	±0.03% Span	*
Linearity	±0.005% Span	*
Stability		
Input Offset	±1µV/°C	±20µV/°C
Output Offset	±20µV/°C	*
Gain	±25ppm/°C	±50ppm/°C
Noise		
Input, 0.1 to 10Hz	0.2µVrms	2µVrms
Output, 100kHz	200µVrms	*
Bandwidth, –3dB	4Hz	*
Response Time, 90% Span	0.2s	*
Output Range	See Ordering Information	*
Output Resistance	50Ω	*
Output Protection	Continuous Short to Ground	*
Output Selection Time (to ±1mV of V_{OUT})	6µs at C_{load} = 0 to 2000pF	*
Output Current Limit	±8mA	*
Output Enable Control		
Max Logic "0"	+0.8V	*
Min Logic "1"	+2.4V	*
Max Logic "1"	+36V	*
Input Current "0,1"	0.5µA	*
Power Supply Voltage	+5VDC ±5%	*
Power Supply Current	30mA	*
Power Supply Sensitivity	±2µV/% RTI(2)	±200µV/% RTI(2)
Mechanical Dimensions (h)(w)(d)	2.28" x 2.26" x 0.60" (58mm x 57mm x 15mm)	*
Environmental		
Operating Temp. Range	–40°C to +85°C	*
Storage Temp. Range	–40°C to +85°C	*
Relative Humidity	0 to 95% Noncondensing	*
Emissions EN61000-6-4	ISM, Group 1	*
Radiated, Conducted	Class A	*
Immunity EN61000-6-2	ISM, Group 1	*
RF	Performance A ±0.5% Span Error	*
ESD,EFT	Performance B	*

NOTES:

*Contact factory or your local Dataforth sales office for maximum values.

*Same specification as SCM5B30.

(1) Includes linearity, hysteresis and repeatability.

(2) RTI = Referenced to input.

(3) Same as SCM5B31-01 with 50MΩ input resistance.

Ordering Information

Model	Input Range	Output Range†
SCM5B30-01	–10mV to +10mV	1, 2
SCM5B30-02	–50mV to +50mV	1, 2
SCM5B30-03	–100mV to +100mV	1, 2
SCM5B30-04	–10mV to +10mV	3, 4
SCM5B30-05	–50mV to +50mV	3, 4
SCM5B30-06	–100mV to +100mV	3, 4
SCM5B30-07(3)	–1V to +1V	1, 2
SCM5B31-01	–1V to +1V	1, 2
SCM5B31-02	–5V to +5V	1, 2
SCM5B31-03	–10V to +10V	1, 2
SCM5B31-04	–1V to +1V	3, 4
SCM5B31-05	–5V to +5V	3, 4
SCM5B31-06	–10V to +10V	3, 4
SCM5B31-07	–20V to +20V	1, 2
SCM5B31-08	–20V to +20V	3, 4
SCM5B31-09	–40V to +40V	1, 2
SCM5B31-10	–40V to +40V	3, 4

†Output Ranges Available

Output Range	Part No.Suffix	Example
1. –5V to +5V	NONE	SCM5B30-01
2. –10V to +10V	D	SCM5B30-01D
3. 0V to +5V	NONE	SCM5B30-04
4. 0V to +10V	D	SCM5B30-04D

©1995-2017 Dataforth Corporation, All Rights Reserved ISO9001:2008-Registered QMS

SCM5B32

Analog Current Input Modules

Description

Each SCM5B32 current input module provides a single channel of analog input which is filtered, isolated, amplified, and converted to a high-level analog voltage output (Figure 1). This voltage output is logic switch controlled, which allows these modules to share a common analog bus without the requirement of external multiplexers.

The SCM5B modules are designed with a completely isolated computer side circuit which can be floated to ±50V from Power Common, pin 16. This complete isolation means that no connection is required between I/O Common and Power Common for proper operation of the output switch. If desired, the output switch can be turned on continuously by simply connecting pin 22, the Read-Enable pin, to I/O Common, pin 19.

A precision 20Ω current conversion resistor is supplied with the SCM5B32 module. Sockets are provided on the SCMPB01/02/03/04/05/06/07 backpanels to allow installation of this resistor. Extra resistors are available under part number SCMXR1.

Signal filtering is accomplished with a six-pole filter which provides 95dB of normal-mode rejection at 60Hz and 90dB at 50Hz. Two poles of this filter are on the field side of the isolation barrier, and the other four are on the computer side.

After the initial field-side filtering, the input signal is chopped by a proprietary chopper circuit. Isolation is provided by transformer coupling, again using a proprietary technique to suppress transmission of common mode spikes or surges. The module is powered from +5VDC, ±5%.

A special input circuit on the SCM5B32 modules provides protection against accidental connection of power-line voltages up to 240VAC.

Features

- Accepts Milliamp Level Signals
- High-Level Voltage Outputs
- 1500Vrms Transformer Isolation
- ANSI/IEEE C37.90.1 Transient Protection
- Input Protected to 240VAC Continuous
- 160dB CMR
- 95dB NMR at 60Hz, 90dB at 50Hz
- ±0.03% Accuracy
- ±0.005% Linearity
- CSA C/US Certified
- CE and ATEX Compliant
- Mix and Match SCM5B Types on Backpanel

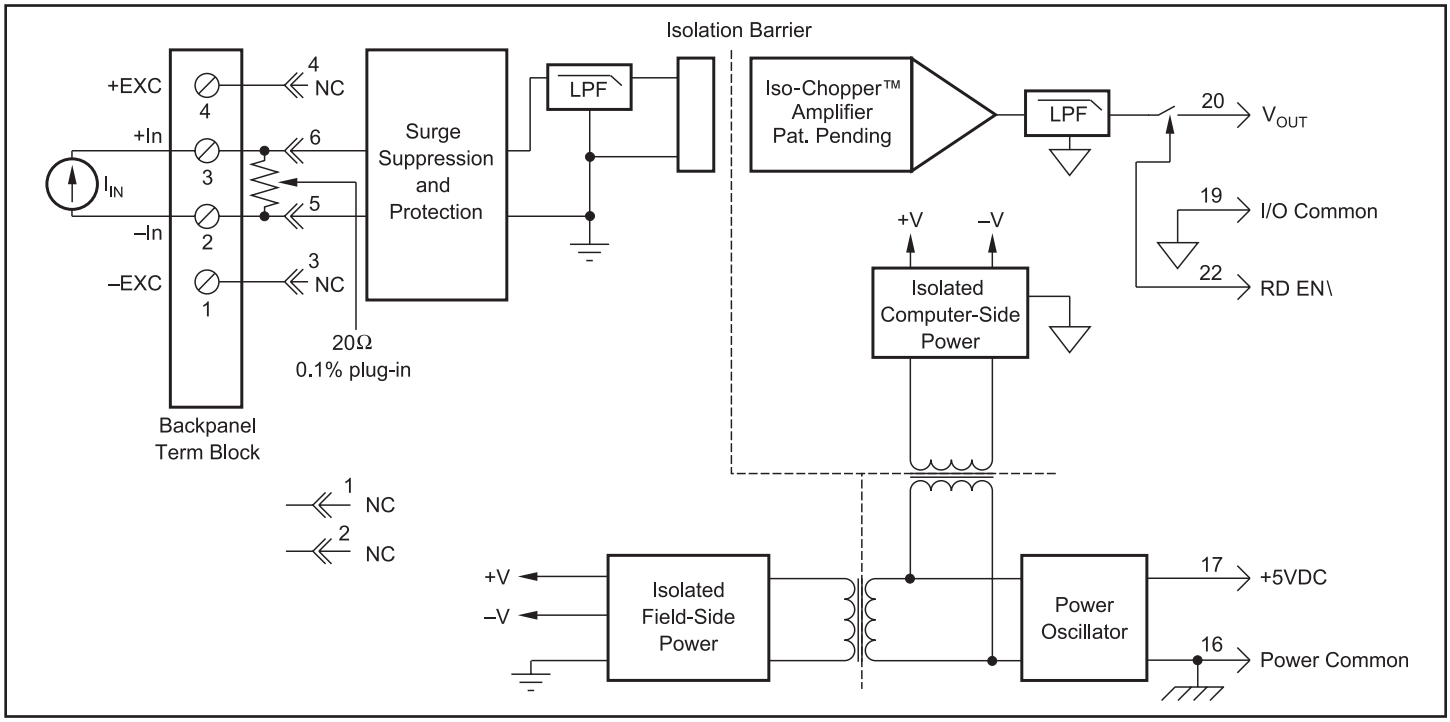

Figure 1: SCM5B32 Block Diagram

©1995-2017 Dataforth Corporation, All Rights Reserved ISO9001:2008-Registered QMS

Specifications

Typical* at T_A = +25°C and +5VDC power

Module	SCM5B32
Input Range	0mA to 20mA or 4mA to 20mA
Input Resistor	
Value	20.00Ω
Accuracy	±0.1%
Stability	±10ppm/°C
Input Protection	
Continuous	240Vrms max
Transient	ANSI/IEEE C37.90.1
CMV, Input to Output	
Continuous	1500Vrms max
Transient	ANSI/IEEE C37.90.1
CMR (50Hz or 60Hz)	160dB
NMR	95dB at 60Hz, 90dB at 50Hz
Accuracy(1)	±0.03% Span
Linearity	±0.005% Span
Stability	
Input Offset	±50nA/°C
Output Offset	±20µV/°C
Gain	±25ppm/°C
Noise	
Input, 0.1Hz to 10Hz	10nArms
Output, 100kHz	200µVrms
Bandwidth, –3dB	4Hz
Response Time, 90% Span	0.2s
Output Range	See Ordering Information
Output Resistance	50Ω
Output Protection	Continuous Short to Ground
Output Selection Time (to ±1mV of V_{OUT})	6µs at C_{load} = 0 to 2000pF
Output Current Limit	+8mA
Output Enable Control	
Max Logic "0"	+0.8V
Min Logic "1"	+2.4V
Max Logic "1"	+36V
Input Current "0,1"	0.5µA
Power Supply Voltage	+5VDC ±5%
Power Supply Current	30mA
Power Supply Sensitivity	±1µA/% RTI(2)
Mechanical Dimensions (h)(w)(d)	2.28" x 2.26" x 0.60" (58mm x 57mm x 15mm)
Environmental	
Operating Temperature Range	–40°C to +85°C
Storage Temperature Range	–40°C to +85°C
Relative Humidity	0 to 95% Noncondensing
Emissions EN61000-6-4	ISM, Group 1
Radiated, Conducted	Class A
Immunity EN61000-6-2	ISM, Group 1
RF	Performance A ±0.5% Span Error
ESD, EFT	Performance B

NOTES:

*Contact factory or your local Dataforth sales office for maximum values.

(1) Includes linearity, hysteresis and repeatability. Does not include SCMXR1 accuracy.

(2) RTI = Referenced to input.

Ordering Information

Model	Input Range	Output Range †
SCM5B32-01	4mA to 20mA	3, 4
SCM5B32-02	0mA to 20mA	3, 4

Refer to SCM5B392 specifications, p. 27, for additional current input models.

†Output Ranges Available

Output Range	Part No. Suffix	Example
3. 0V to +5V	NONE	SCM5B32-01
4. 0V to +10V	D	SCM5B32-01D

©1995-2017 Dataforth Corporation, All Rights Reserved ISO9001:2008-Registered QMS

SCM5B33

Isolated True RMS Input Modules

Description

Each SCM5B33 True RMS input module provides a single channel of AC input which is converted to its True RMS DC value, filtered, isolated, amplified, and converted to a standard process voltage or current output (Figure 1).

The SCM5B modules are designed with a completely isolated computer side circuit which can be floated to ±50V from Power Common, pin 16. This complete isolation means that no connection is required between I/O Common and Power Common for proper operation of the output switch. If desired, the output switch can be turned on continuously by simply connecting pin 22, the Read-Enable pin, to I/O Common, pin 19.

The field voltage or current input signal is processed through a pre-amplifier and RMS converter on the field side of the isolation barrier. The converted DC signal is then chopped by a proprietary chopper circuit and transferred across the transformer isolation barrier, suppressing transmission of common mode spikes and surges. The computer side circuitry reconstructs, filters and converts the signal to industry standard outputs. Modules are powered from +5VDC, ±5%.

For current output models, in addition to the 5VDC module power, an external loop supply of 4.2V to 26V is required. The loop supply connection, with series load, is between pin 20 (+) and pin 19 (-).

Due to circuit limitations, SCM5B33-04x and -05x are not ATEX compliant.

WARNING: The SCM5B33 interfaces to hazardous voltages and should only be wired by qualified personnel or licensed electricians.

Features

- Interfaces RMS Voltage (0 – 300V) or RMS Current (0 – 5A)
- Designed for Standard Operation with Frequecies of 45Hz to 1000Hz (Extended Range to 20kHz)
- Compatible with Standard Current and Potential Transformers
- Industry Standard Output of Either 0-1mA, 0-20mA, 4-20mA, 0-5V or 0-10VDC
- ±0.25% Factory Calibrated Accuracy (Accuracy Class 0.2)
- 1500Vrms Continuous Transformer Isolation
- Input Overload Protected to 480V Max (Peak AC & DC) or 10A RMS Continuous
- ANSI/IEEE C37.90.1 Transient Protection
- CSA C/US Certified
- CE Compliant
- ATEX Compliant (all models except SCM5B33-04x, -05x)
- Mix and Match SCM5B Types on Backpanel

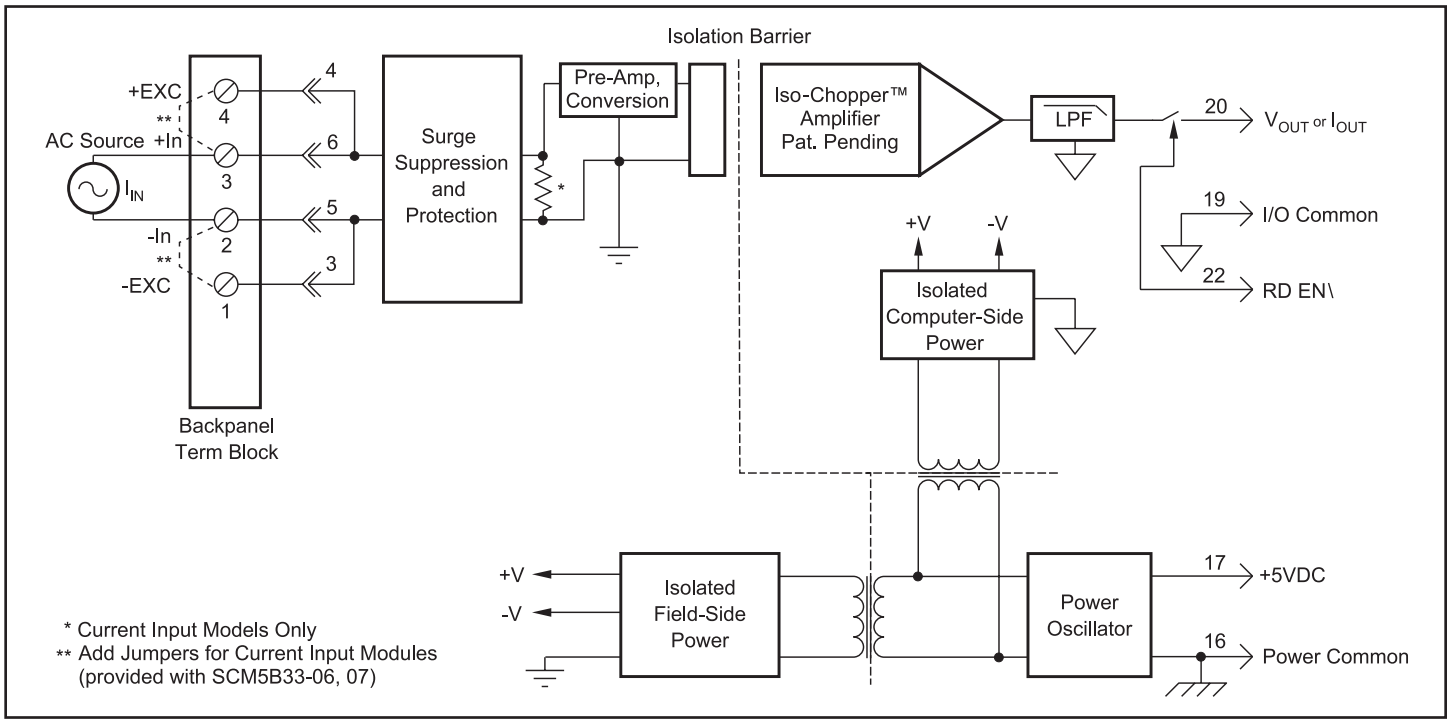

Figure 1: SCM5B33 Block Diagram

©1995-2017 Dataforth Corporation, All Rights Reserved ISO9001:2008-Registered QMS

Specifications

Typical* at T_A = +25°C and +5VDC power

Module	SCM5B33
Input	
Signal Range	100mV to 300Vrms, 0 to 5Arms
Standard Frequency Range	45Hz to 1000Hz
Extended Frequency Range	1kHz to 20kHz
Impedance	1 MΩ shunted by 100pF (-01 thru -05), 0.10Ω (-06), 0.025Ω (-07)
Coupling	AC
Protection(1)	
Continuous (-01 thru -05)	350Vrms
Continuous (-06 thru -07)	10Arms
Transient (-01 thru -05)	ANSI/IEEE C37.90.1
Transient (-06 thru -07)	See note 2
Output	
Signal Range	0-5V or 0-10V or 0-1mA or 0-20mA or 4-20mA
Current Limit	1.4mA (0-1mA models), 30mA (0/4-20mA models), 8mA (0-5, 0-10V models)
Voltage Limit	±18V (0-5, 0-10V models)
Resistance	50Ω (0-5, 0-10V models)
Protection	Continuous Short to Ground
Ripple and Noise (100kHz)	0.025% Span rms
Accuracy (10-100% Span)(3)(4)	
Sinusoid	
50/60 Hz	±0.25% Span
45Hz to 1kHz	±0.25% Reading Additional Error
1kHz to 20kHz	±0.75% Reading Additional Error
Non-Sinusoid	
Crest Factor = 1 to 2	±0.05% Reading Additional Error
Crest Factor = 2 to 3	±0.15% Reading Additional Error
Crest Factor = 3 to 4	±0.30% Reading Additional Error
Crest Factor = 4 to 5	±0.40% Reading Additional Error
Vs. Temperature	±100ppm/°C
Isolation (Common Mode)	
Input to Output, Input to Power	
Continuous	1500Vrms max
Transient	ANSI/IEEE C37.90.1
Output to Power	
Continuous	50VDC max
Rejection (50-60Hz Common Mode)	100dB
Response Time (0 to 99%)	<400ms
Output Enable Control	
Selection Time	6.0µS at C_{load} = 0 to 2000pF
Max Logic "0"	+0.8V
Min/Max Logic "1"	+2.4V/+36V
Current "0,1"	0.5µA
Loop Voltage	+4.2VDC min, +26VDC max, –40°C to +85°C
Load Resistance (maximum)	(Loop Voltage - 4.2) / (Loop Current)
Supply Voltage	+5VDC ±5%
Current	120mA
Sensitivity	±200ppm/%
Mechanical Dimensions (h)(w)(d)	2.28" x 2.26" x 0.60" (58mm x 57mm x 15mm)
Environmental	
Operating Temperature Range	–40°C to +85°C
Storage Temperature Range	–40°C to +85°C
Relative Humidity	0 to 95% Noncondensing
HazLoc ATEX	All models except SCM5B33-04x, -05x
Emissions EN61000-6-4	ISM, Group 1
Radiated, Conducted	Class A
Immunity EN61000-6-2	ISM, Group 1
RF	Performance A ±0.5% Span Error
ESD, EFT	Performance B

NOTES:
*Contact factory or your local Dataforth sales office for maximum values.
(1) SCM5B33 and SCMPB01, 02, 03, 04, 05, 06, 07, XEV rating only. Backpanels obtained from other sources may have lower ratings.
(2) For 1 to 25 seconds the max allowable transient current rating is $\sqrt{2500 / (\text{event time})}$. For less than 1 second, ANSI/IEEE C37.90.1 applies with a 0.05Ω load. For greater than 25 seconds, the 10A rms continuous rating applies.

Ordering Information

Model	Input (rms)†	Output (DC)†
SCM5B33-01	0mV to 100mV	0V to 5V
SCM5B33-02	0V to 1V	0V to 5V
SCM5B33-03	0V to 10V	0V to 5V
SCM5B33-04	0V to 150V	0V to 5V
SCM5B33-05	0V to 300V	0V to 5V
SCM5B33-06	0A to 1A	0V to 5V
SCM5B33-07	0A to 5A	0V to 5V
SCM5B33-01B	0mV to 100mV	0mA to 1mA
SCM5B33-02B	0V to 1V	0mA to 1mA
SCM5B33-03B	0V to 10V	0mA to 1mA
SCM5B33-04B	0V to 150V	0mA to 1mA
SCM5B33-05B	0V to 300V	0mA to 1mA
SCM5B33-06B	0A to 1A	0mA to 1mA
SCM5B33-07B	0A to 5A	0mA to 1mA
SCM5B33-01C	0mV to 100mV	4mA to 20mA
SCM5B33-02C	0V to 1V	4mA to 20mA
SCM5B33-03C	0V to 10V	4mA to 20mA
SCM5B33-04C	0V to 150V	4mA to 20mA
SCM5B33-05C	0V to 300V	4mA to 20mA
SCM5B33-06C	0A to 1A	4mA to 20mA
SCM5B33-07C	0A to 5A	4mA to 20mA
SCM5B33-01D	0mV to 100mV	0V to 10V
SCM5B33-02D	0V to 1V	0V to 10V
SCM5B33-03D	0V to 10V	0V to 10V
SCM5B33-04D	0V to 150V	0V to 10V
SCM5B33-05D	0V to 300V	0V to 10V
SCM5B33-06D	0A to 1A	0V to 10V
SCM5B33-07D	0A to 5A	0V to 10V
SCM5B33-01E	0mV to 100mV	0mA to 20mA
SCM5B33-02E	0V to 1V	0mA to 20mA
SCM5B33-03E	0V to 10V	0mA to 20mA
SCM5B33-04E	0V to 150V	0mA to 20mA
SCM5B33-05E	0V to 300V	0mA to 20mA
SCM5B33-06E	0A to 1A	0mA to 20mA
SCM5B33-07E	0A to 5A	0mA to 20mA

† Modules can be ordered with other input/output ranges. Consult factory for ordering details and specifications.

†Output Ranges Available

Output Range	Part No. Suffix	Example
3. 0V to +5V	NONE	SCM5B33-01
4. 0V to +10V	D	SCM5B33-01D
5. 4mA to 20mA	C	SCM5B33-01C
6. 0mA to 20mA	E	SCM5B33-01E
7. 0mA to 1mA	B	SCM5B33-01B

(3) At standard 60Hz factory calibration. Consult factory for calibration at other frequencies.
(4) For 0-10% Span measurements, add 0.25% accuracy error (-02 through -07) or 1.00% accuracy error (-01). Accuracy includes linearity, hysteresis and repeatability but not source or external shunt inaccuracy (if used).

©1995-2017 Dataforth Corporation, All Rights Reserved ISO9001:2008-Registered QMS

SCM5B34

Linearized 2- or 3-Wire RTD Input Modules

Description

Each SCM5B34 RTD input module provides a single channel of RTD input which is filtered, isolated, amplified, linearized, and converted to a high-level analog voltage output (Figure 1). This voltage output is logic switch controlled, which allows these modules to share a common analog bus without the requirement of external multiplexers.

The SCM5B modules are designed with a completely isolated computer side circuit which can be floated to ±50V from Power Common, pin 16. This complete isolation means that no connection is required between I/O Common and Power Common for proper operation of the output switch. If desired, the output switch can be turned on continuously by simply connecting pin 22, the Read-Enable pin, to I/O Common, pin 19.

RTD excitation is provided from the module by two matched current sources. When using a three-wire RTD, this method allows an equal current to flow in each RTD lead, which cancels the effects of lead resistances. The excitation currents are very small (0.25mA for 100Ω Pt and 120Ω Ni, and 1.0mA for 10Ω Cu) which minimizes self-heating of the RTD.

Signal filtering is accomplished with a six-pole filter which provides 95dB of normal-mode rejection at 60Hz and 90dB at 50Hz. Two poles of this filter are on the field side of the isolation barrier, and the other four are on the computer side. After the initial field-side filtering, the input signal is chopped by a proprietary chopper circuit. Isolation is provided by transformer coupling, again using a proprietary technique to suppress transmission of common mode spikes or surges. The module is powered from +5VDC, ±5%.

A special input circuit on the SCM5B34 modules provides protection against accidental connection of power-line voltages up to 240VAC.

Features

- Interfaces to 100Ω Platinum, 10Ω Copper, or 120Ω Nickel RTDs
- Linearizes RTD Signal
- High-Level Voltage Outputs
- 1500Vrms Transformer Isolation
- ANSI/IEEE C37.90.1 Transient Protection
- Input Protected to 240VAC Continuous
- 160dB CMR
- 95dB NMR at 60Hz, 90dB at 50Hz
- CSA C/US Certified
- CE and ATEX Compliant
- Mix and Match SCM5B Types on Backpanel

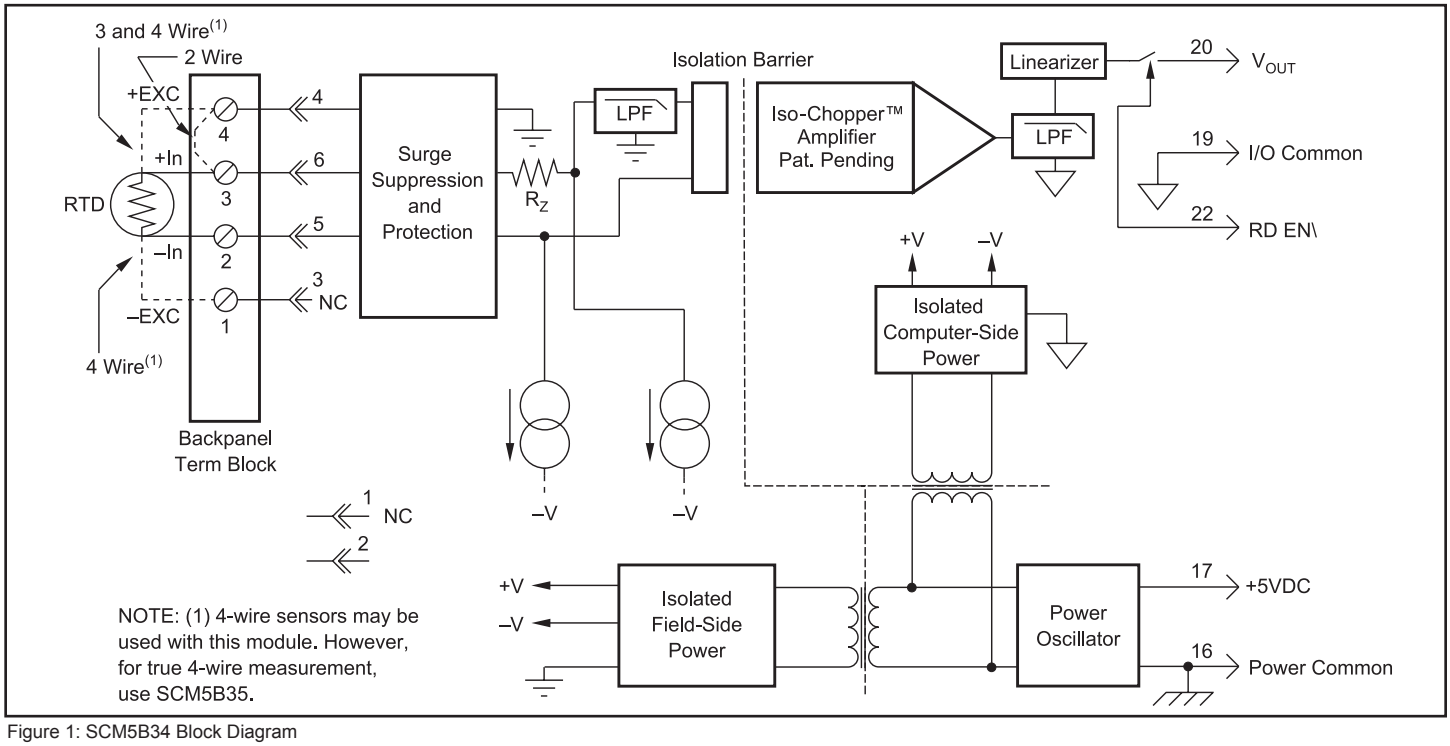

Figure 1: SCM5B34 Block Diagram

©1995-2017 Dataforth Corporation, All Rights Reserved ISO9001:2008-Registered QMS

Specifications

Typical* at T_A = +25°C and +5VDC power

Module	SCM5B34
Input Range Limits	–200°C to +850°C (100Ω Pt) –80°C to +320°C (120Ω Ni) –100°C to +260°C (10Ω Cu)
Input Resistance	
Normal	50MΩ
Power Off	40kΩ
Overload	40kΩ
Input Protection	
Continuous	240Vrms max
Transient	ANSI/IEEE C37.90.1
Sensor Excitation Current	
100Ω Pt, 120Ω Ni	0.25mA
10Ω Cu	1.0mA
Lead Resistance Effect	
100Ω Pt, 120Ω Ni	±0.02°C/Ω(1)
10Ω Cu	±0.2°C/Ω(1)
CMV, Input to Output	
Continuous	1500Vrms max
Transient	ANSI/IEEE C37.90.1
CMR (50 or 60Hz)	160dB
NMR	95dB at 60Hz, 90dB at 50Hz
Accuracy	See Ordering Information
Conformity Error(3)	±0.025% Span
Stability	
Input Offset	±0.01°C/°C
Output Offset	±20µV/°C
Gain	±35ppm of Reading/°C
Noise	
Input, 0.1 to 10Hz	0.2µVrms
Output, 100kHz	200µVrms
Bandwidth, –3dB	4Hz
Response Time, 90% Span	0.2s
Output Range	See Ordering Information
Output Resistance	50Ω
Output Protection	Continuous Short to Ground
Output Selection Time (to ±1mV of V_{OUT})	6µs at C_{load} = 0 to 2000pF
Output Current Limit	+8mA
Output Enable Control	
Max Logic "0"	+0.8V
Min Logic "1"	+2.4V
Max Logic "1"	+36V
Input Current "0,1"	0.5µA
Open Input Response	Downscale
Open Input Detection Time	3s
Power Supply Voltage	+5VDC ±5%
Power Supply Current	30mA
Power Supply Sensitivity	
100Ω Pt, 120Ω Ni	0.2°C/V
10Ω Cu	0.5°C/V
Mechanical Dimensions (h)(w)(d)	2.28" x 2.26" x 0.60" (58mm x 57mm x 15mm)
Environmental	
Operating Temperature Range	–40°C to +85°C
Storage Temperature Range	–40°C to +85°C
Relative Humidity	0 to 95% Noncondensing
Emissions EN61000-6-4	ISM, Group 1
Radiated, Conducted	Class A
Immunity EN61000-6-2	ISM, Group 1
RF	Performance A ±0.5% Span Error
ESD, EFT	Performance B

Ordering Information

Model	Input Range	Output Range†	Accuracy(2)
100Ω Pt **			
SCM5B34-01	–100°C to +100°C (–148°F to +212°F)	3, 4	±0.12°C
SCM5B34-02	0°C to +100°C (+32°F to +212°F)	3, 4	±0.06°C
SCM5B34-03	0°C to +200°C (+32°F to +392°F)	3, 4	±0.12°C
SCM5B34-04	0°C to +600°C (+32°F to +1112°F)	3, 4	±0.36°C
SCM5B34-05	–100°C to +200°C (–148°F to +392°F)	3, 4	±0.18°C
10Ω Cu **			
SCM5B34C-01	0°C to +120°C (10Ω at 0°C) (+32°F to +248°F)	3, 4	±0.23°C
SCM5B34C-02	0°C to +120°C (10Ω at 25°C) (+32°F to +248°F)	3, 4	±0.23°C
SCM5B34C-03	0°C to +160°C (10Ω at 0°C) (+32°F to +320°F)	3, 4	±0.32°C
120Ω Ni **			
SCM5B34N-01	0°C to +300°C (+32°F to +572°F)	3, 4	±0.23°C

**RTD Standards

Type	Alpha Coefficient	DIN	JIS	IEC
100Ω Pt 120Ω Ni 10Ω Cu	0.00385 0.00672 0.004274	DIN 43760	JIS C 1604-1989	IEC 751

†Output Ranges Available

Output Range	Part No. Suffix	Example
3. 0V to +5V	NONE	SCM5B34-01
4. 0V to +10V	D	SCM5B34-01D

NOTES :
*Contact factory or your local Dataforth sales office for maximum values.
(1) "Ω" refers to the resistance in one lead.
(2) Includes conformity, hysteresis and repeatability.
(3) Conformity error is ±0.05% Span for SCM5B34N-01.

©1995-2017 Dataforth Corporation, All Rights Reserved ISO9001:2008-Registered QMS

SCM5B35

Linearized 4-Wire RTD Input Modules

Description

In RTD temperature measurement applications requiring a very high level of accuracy, the SCM5B35 4-Wire RTD input module offers a significant advantage over 3-wire measurement techniques (Figure 1). The SCM5B35 measures only the voltage dropped across the RTD and almost completely ignores the resistance or length of the RTD lead wires. The SCM5B34 3-Wire RTD module provides lead resistance compensation, but requires equal lead resistances, while the SCM5B35 does not require matched lead resistances.

Each SCM5B35 RTD input module provides a single channel of RTD input which is filtered, isolated, amplified, linearized, and converted to a high-level analog voltage output. This voltage output is logic switch controlled, which allows these modules to share a common analog bus without the requirement of external multiplexers.

The SCM5B modules are designed with a completely isolated computer side circuit which can be floated to ±50V from Power Common, pin 16. This complete isolation means that no connection is required between I/O Common and Power Common for proper operation of the output switch. If desired, the output switch can be turned on continuously by simply connecting pin 22, the Read-Enable pin, to I/O Common, pin 19.

RTD excitation is provided from the module by a precision current source. The excitation current is available on two leads which are separate from the two input signal measuring leads. The excitation current does not flow in the input signal leads, which allows RTD measurement to be totally independent of lead resistance. The excitation current is very small (0.25mA for 100Ω Pt and 120Ω Ni and 1.0 mA for 10Ω Cu) which minimizes self-heating of the RTD.

Signal filtering is accomplished with a six-pole filter which provides 95dB of normal-mode rejection at 60Hz and 90dB at 50Hz. Two poles of this filter are on the field side of the isolation barrier, and the other four are on the computer side. After the initial field-side filtering, the input signal is chopped by a proprietary chopper circuit. Isolation is provided by transformer coupling, again using a proprietary technique to suppress transmission of common mode spikes or surges. The module is powered from +5VDC, ±5%.

A special input circuit on the SCM5B35 modules provides protection against accidental connection of power-line voltages up to 240VAC.

Features

- Interfaces to 100Ω Platinum, 10Ω Copper, or 120Ω Nickel RTDs
- True 4-Wire Input
- Linearizes RTD Signal
- High-Level Voltage Output
- 1500Vrms Transformer Isolation
- ANSI/IEEE C37.90.1 Transient Protection
- Input Protected to 240VAC Continuous
- 160dB CMR
- 95dB NMR at 60Hz, 90dB at 50Hz
- CSA C/US Certified
- CE and ATEX Compliant
- Mix and Match SCM5B Types on Backpanel

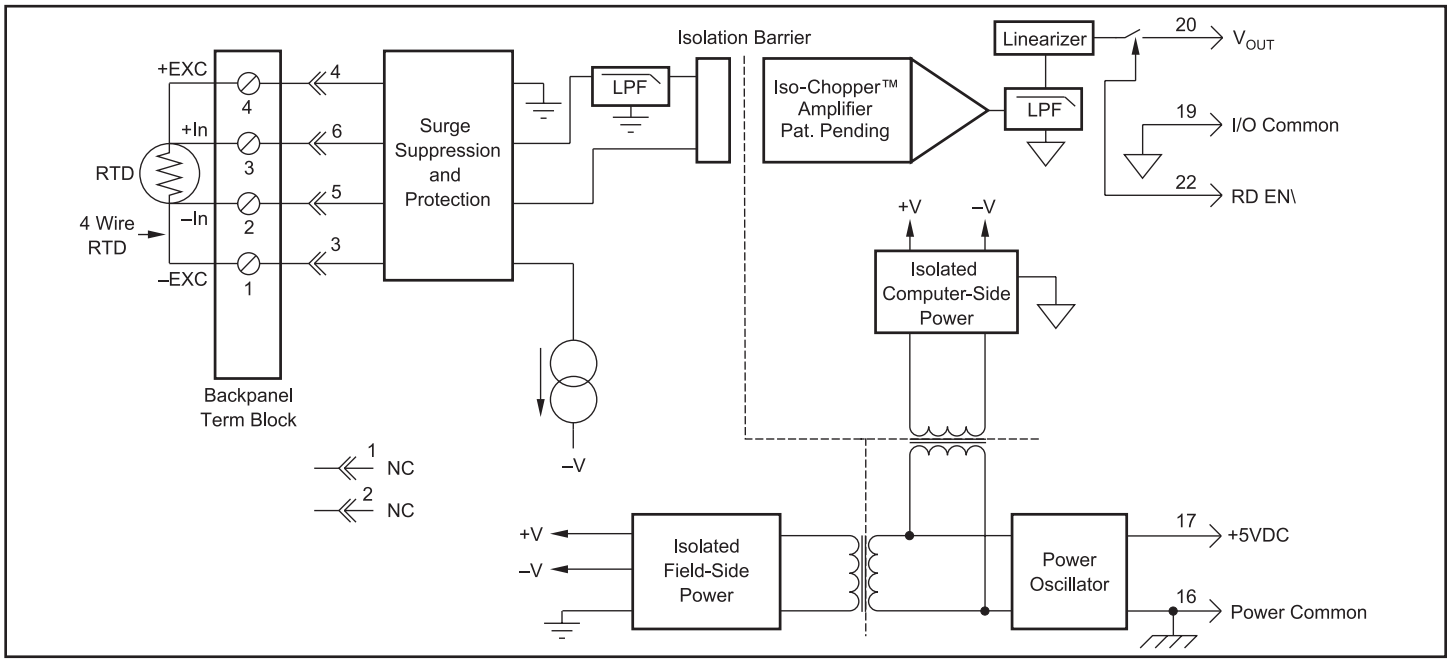

Figure 1: SCM5B35 Block Diagram

©1995-2017 Dataforth Corporation, All Rights Reserved ISO9001:2008-Registered QMS

Specifications

Typical* at T_A = +25°C and +5VDC power

Module	SCM5B35
Input Range Limits	–200°C to +850°C (100Ω Pt) –80°C to +320°C (120Ω Ni) –100°C to +260°C (10Ω Cu)
Input Resistance	
Normal	50MΩ
Power Off	40kΩ
Overload	40kΩ
Input Protection	
Continuous	240Vrms max
Transient	ANSI/IEEE C37.90.1
Sensor Excitation Current	
100Ω Pt, 120Ω Ni	0.25mA
10Ω Cu	1.0mA
Lead Resistance Effect	
100Ω Pt, 120Ω Ni	±0.0005°C/Ω(1)
10Ω Cu	±0.005°C/Ω(1)
CMV, Input to Output	
Continuous	1500Vrms max
Transient	ANSI/IEEE C37.90.1
CMR (50Hz or 60Hz)	160dB
NMR	95dB at 60Hz, 90dB at 50Hz
Accuracy	See Ordering Information
Conformity Error(3)	±0.025% Span
Stability	
Input Offset	±0.01°C/°C
Output Offset	±20µV/°C
Gain	±35ppm of Reading/°C
Noise	
Input, 0.1 to 10Hz	0.2µVrms
Output, 100kHz	200µVrms
Bandwidth, –3dB	4Hz
Response Time, 90% Span	0.2s
Output Range	See Ordering Information
Output Resistance	50Ω
Output Protection	Continuous Short to Ground
Output Selection Time (to ±1mV of V_{OUT})	6µs at C_{load} = 0 to 2000pF
Output Current Limit	+8mA
Output Enable Control	
Max Logic "0"	+0.8V
Min Logic "1"	+2.4V
Max Logic "1"	+36V
Input Current "0,1"	0.5µA
Open Input Response	
Lead 1,4	Downscale
Lead 2,3	Non-deterministic
Open Input Detection Time	3s
Power Supply Voltage	+5VDC ±5%
Power Supply Current	30mA
Power Supply Sensitivity	
100Ω Pt, 120Ω Ni	±0.2°C/V
10Ω Cu	±0.5°C/V
Mechanical Dimensions (h)(w)(d)	2.28" x 2.26" x 0.60" (58mm x 57mm x 15mm)
Environmental	
Operating Temperature Range	–40°C to +85°C
Storage Temperature Range	–40°C to +85°C
Relative Humidity	0 to 95% Noncondensing
Emissions EN61000-6-4	ISM, Group 1
Radiated, Conducted	Class A
Immunity EN61000-6-2	ISM, Group 1
RF	Performance A ±0.5% Span Error
ESD, EFT	Performance B

Ordering Information

Model	Input Range	Output Range†	Accuracy(2)
100Ω Pt **			
SCM5B35-01	–100°C to +100°C (–148°F to +212°F)	3, 4	±0.12°C
SCM5B35-02	0°C to +100°C (+32°F to +212°F)	3, 4	±0.06°C
SCM5B35-03	0°C to +200°C (+32°F to +392°F)	3, 4	±0.12°C
SCM5B35-04	0°C to +600°C (+32°F to +1112°F)	3, 4	±0.36°C
SCM5B35-05	-100°C to +200°C (-148°F to +392°F)	3, 4	±0.18°C
10Ω Cu **			
SCM5B35C-01	0°C to +120°C (10Ω at 0°C) (+32°F to +248°F)	3, 4	±0.23°C
SCM5B35C-02	0°C to +120°C (10Ω at 25°C) (+32°F to +248°F)	3, 4	±0.23°C
SCM5B35C-03	0°C to +160°C (10Ω at 0°C) (+32°F to +320°F)	3, 4	±0.32°C
120Ω Ni **			
SCM5B35N-01	0°C to +300°C (+32°F to +572°F)	3, 4	±0.23°C

**RTD Standards

Type	Alpha Coefficient	DIN	JIS	IEC
100Ω Pt 120Ω Ni 10Ω Cu	0.00385 0.00672 0.004274	DIN 43760	JIS C 1604-1989	IEC 751

†Output Ranges Available

Output Range	Part No. Suffix	Example
3. 0V to +5V	NONE	SCM5B35-01
4. 0V to +10V	D	SCM5B35-01D

NOTES :
*Contact factory or your local Dataforth sales office for maximum values.
(1) "Ω" refers to the resistance in one lead.
(2) Includes conformity, hysteresis and repeatability.
(3) Conformity error is ±0.05% Span for SCM5B35N-01.

©1995-2017 Dataforth Corporation, All Rights Reserved ISO9001:2008-Registered QMS

SCM5B36

Potentiometer Input Modules

Description

Each SCM5B36 Potentiometer input module provides a single channel of potentiometer input which is filtered, isolated, amplified, and converted to a high-level analog voltage output (Figure 1). This voltage output is logic switch controlled, which allows these modules to share a common analog bus without the requirement of external multiplexers.

The SCM5B modules are designed with a completely isolated computer side circuit which can be floated to ± 50V from Power Common, pin 16. This complete isolation means that no connection is required between I/O Common and Power Common for proper operation of the output switch. If desired, the output switch can be turned on continuously by simply connecting pin 22, the Read-Enable pin, to I/O Common, pin 19.

Excitation for the potentiometer is provided from the module by two matched current sources. When using a three-wire potentiometer, this method allows cancellation of the effects of lead resistances. The excitation currents are very small (less than 1.0mA) which minimizes self-heating of the potentiometer.

Signal filtering is accomplished with a six-pole filter which provides 95dB of normal-mode rejection at 60Hz and 90dB at 50Hz. Two poles of this filter are on the field side of the isolation barrier, and the other four are in the output stage. After the initial field-side filtering, the input signal is chopped by a proprietary chopper circuit. Isolation is provided by transformer coupling, again using a proprietary technique to suppress transmission of common mode spikes or surges. The module is powered from +5VDC, ±5%.

A special input circuit on the SCM5B36 module provides protection against accidental connection of power-line voltages up to 240VAC.

Features

- Interfaces to Potentiometers up to 10,000Ω
- High-Level Voltage Output
- 1500Vrms Transformer Isolation
- ANSI/IEEE C37.90.1 Transient Protection
- Input Protected to 240VAC Continuous
- 160dB CMR
- 95dB NMR at 60Hz, 90dB at 50Hz
- ±0.03% Accuracy
- ±0.005% Linearity
- CSA C/US Certified
- CE and ATEX Compliant
- Mix and Match SCM5B Types on Backpanel

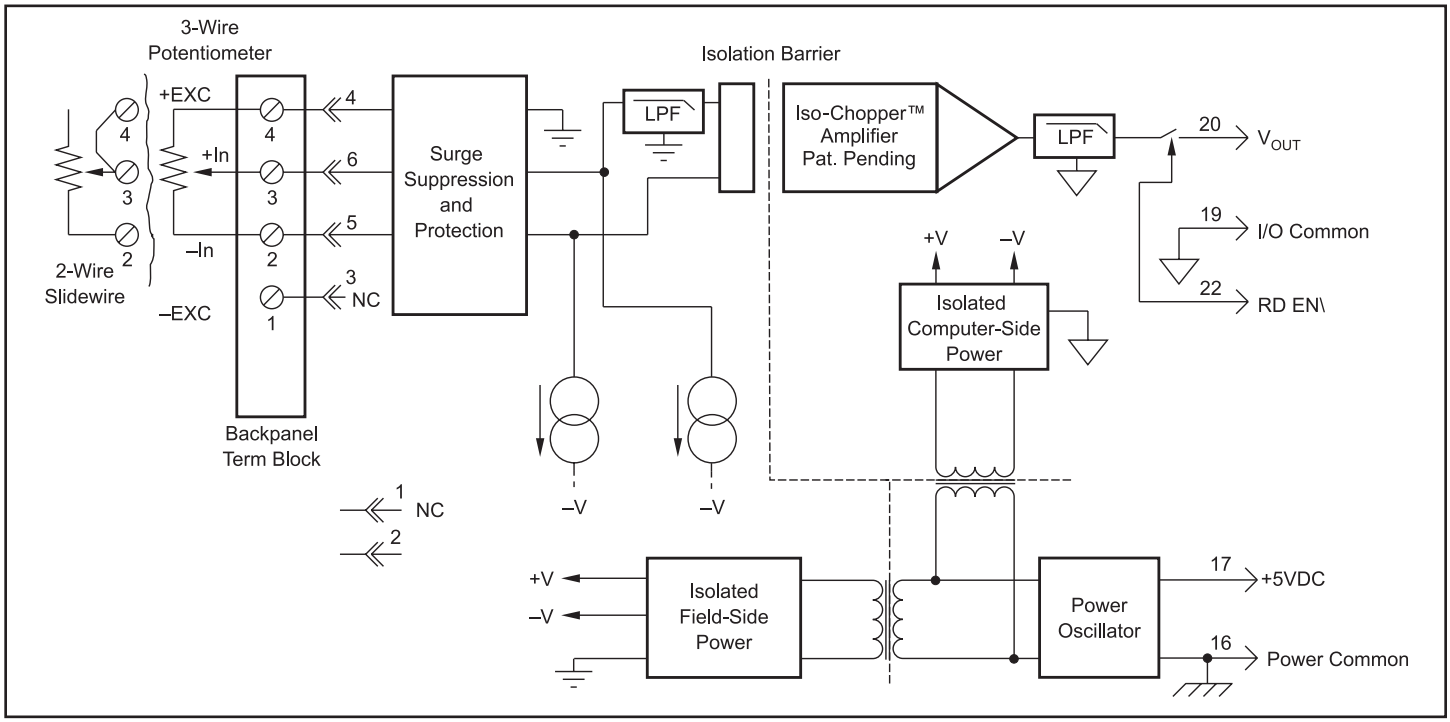

Figure 1: SCM5B36 Block Diagram

©1995-2017 Dataforth Corporation, All Rights Reserved ISO9001:2008-Registered QMS

Specifications

Typical* at T_A = +25°C and +5VDC power

Module	SCM5B36
Input Range	0 to 10kΩ
Input Resistance	
Normal	50MΩ
Power Off	40kΩ
Overload	40kΩ
Input Protection	
Continuous	240Vrms max
Transient	ANSI/IEEE C37.90.1
Sensor Excitation Current	0.25mA; 100Ω, 500Ω, 1kΩ Sensor 0.10mA; 10kΩ Sensor
Lead Resistance Effect	±0.01Ω/Ω; 100Ω, 500Ω, 1kΩ Sensor ±0.02Ω/Ω; 10kΩ Sensor
CMV, Input to Output	
Continuous	1500Vrms max
Transient	ANSI/IEEE C37.90.1
CMR (50 or 60Hz)	160dB
NMR	95dB at 60Hz, 90dB at 50Hz
Accuracy(1)	±0.03% Span
Linearity	±0.005% Span
Stability	
Input Offset	±0.004Ω/°C; 100Ω, 500Ω, 1kΩ sensor ±0.010Ω/°C; 10kΩ sensor
Output Offset	±20µV/°C
Gain	±50ppm of Reading/°C
Noise	
Input, 0.1 to 10Hz	0.2µVrms
Output, 100kHz	200µVrms
Bandwidth, –3dB	4Hz
Response Time, 90% Span	0.2s
Output Range	See Ordering Information
Output Resistance	50Ω
Output Protection	Continuous Short to Ground
Output Selection Time (to ±1mV of V_{OUT})	6µs at C_{load} = 0 to 2000pF
Output Current Limit	+8mA
Output Enable Control	
Max Logic "0"	+0.8V
Min Logic "1"	+2.4V
Max Logic "1"	+36V
Input Current "0,1"	0.5µA
Open Input Response	Downscale
Open Input Detection Time	3s
Power Supply Voltage	+5VDC ±5%
Power Supply Current	30mA
Power Supply Sensitivity	±2µV/% RTI(2)
Mechanical Dimensions (h)(w)(d)	2.28" x 2.26" x 0.60" (58mm x 57mm x 15mm)
Environmental	
Operating Temperature Range	–40°C to +85°C
Storage Temperature Range	–40°C to +85°C
Relative Humidity	0 to 95% Noncondensing
Emissions EN61000-6-4	ISM, Group 1
Radiated, Conducted	Class A
Immunity EN61000-6-2	ISM, Group 1
RF	Performance A ±0.5% Span Error
ESD, EFT	Performance B

NOTES:
*Contact factory or your local Dataforth sales office for maximum values.
(1) Includes linearity, hysteresis and repeatability.
(2) RTI = Referenced to input.

Ordering Information

Model	Input Range	Output Range†
SCM5B36-01	0 to 100Ω	3, 4
SCM5B36-02	0 to 500Ω	3, 4
SCM5B36-03	0 to 1kΩ	3, 4
SCM5B36-04	0 to 10kΩ	3, 4

†Output Ranges Available

Output Range	Part No. Suffix	Example
3. 0V to +5V	NONE	SCM5B36-01
4. 0V to +10V	D	SCM5B36-01D

©1995-2017 Dataforth Corporation, All Rights Reserved ISO9001:2008-Registered QMS

SCM5B37

Non-Linearized Thermocouple Input Modules

Description

Each SCM5B37 non-linearized thermocouple input module provides a single channel of thermocouple input which is filtered, isolated, amplified, and converted to a high-level analog voltage output (Figure 1). This voltage output is logic-switch controlled, allowing these modules to share a common analog bus without the requirement of external multiplexers.

The SCM5B modules are designed with a completely isolated computer side circuit which can be floated to ±50V from Power Common, pin 16. This complete isolation means that no connection is required between I/O Common and Power Common for proper operation of the output switch. If desired, the output switch can be turned on continuously by simply connecting pin 22, the Read-Enable pin, to I/O Common, pin 19.

The SCM5B37 can interface to nine industry standard thermocouple types: J, K, T, E, R, S, C, N, and B. Its corresponding output signal operates over a 0V to +5V range. Each module is cold-junction compensated to correct for parasitic thermocouples formed by the thermocouple wire and screw terminals on the mounting backpanel. Upscale open thermocouple detect is provided by an internal pull-up resistor. Downscale indication can be implemented by installing an external 47MΩ resistor, ±20% tolerance, between screw terminals 1 and 3 on the SCMPB01/02/03/04/05/06/07 backpanels.

Signal filtering is accomplished with a six-pole filter which provides 95dB of normal-mode rejection at 60Hz and 90dB at 50Hz. Two poles of this filter are on the field side of the isolation barrier, and the other four are on the computer side.

After the initial field-side filtering, the input signal is chopped by a proprietary chopper circuit. Isolation is provided by transformer coupling, again using a proprietary technique to suppress transmission of common mode spikes or surges. The module is powered from +5VDC, ±5%.

Features

- Interfaces to Types J, K, T, E, R, S, C, N and B Thermocouples
- High-Level Voltage Output
- 1500Vrms Transformer Isolation
- ANSI/IEEE C37.90.1 Transient Protection
- Input Protected to 240VAC Continuous
- 160dB CMR
- 95dB NMR at 60Hz, 90dB at 50Hz
- ±0.03% Accuracy
- ±0.005% Linearity
- ±1µV/°C Drift
- CSA C/US Certified
- CE and ATEX Compliant
- Mix and Match SCM5B Types on Backpanel

A special input circuit on the SCM5B37 modules provides protection against accidental connection of power-line voltages up to 240VAC.

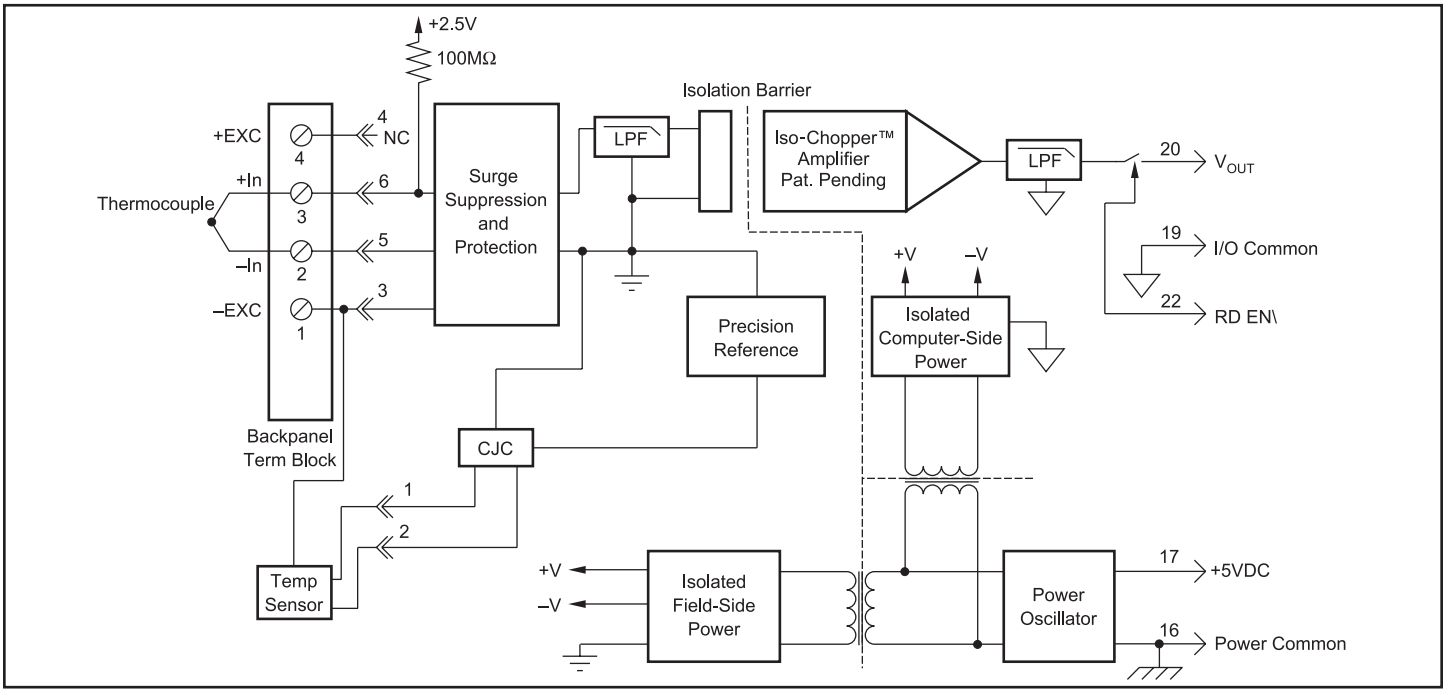

Figure 1: SCM5B37 Block Diagram

©1995-2017 Dataforth Corporation, All Rights Reserved ISO9001:2008-Registered QMS

Specifications

Typical* at T_A = +25°C and +5VDC power

Module	SCM5B37
Input Range	–0.1V to +0.5V
Input Bias Current	–25nA
Input Resistance	
Normal	50MΩ
Power Off	40kΩ
Overload	40kΩ
Input Protection	
Continuous	240Vrms max
Transient	ANSI/IEEE C37.90.1
CMV, Input to Output	
Continuous	1500Vrms max
Transient	ANSI/IEEE C37.90.1
CMR (50Hz or 60Hz)	160dB
NMR	95dB at 60Hz, 90dB at 50Hz
Accuracy	See Ordering Information
Linearity	±0.005% Span
Stability	
Input Offset	±1µV/°C(2)
Output Offset	±20µV/°C
Gain	±25ppm/°C
Noise	
Input, 0.1 to 10Hz	0.2µVrms
Output, 100kHz	200µVrms
Bandwidth, –3dB	4Hz
Response Time, 90% Span	0.2s
Output Range	See Ordering Information
Output Resistance	50Ω
Output Protection	Continuous Short to Ground
Output Selection Time	6µs at C_{load} = 0 to 2000pF
(to ±1mV of V_{OUT})	
Output Current Limit	+8mA
Output Enable Control	
Max Logic "0"	+0.8V
Min Logic "1"	+2.4V
Max Logic "1"	+36V
Input Current "0,1"	0.5µA
Open Input Response	Upscale
Open Input Detection Time	<10s
Cold Junction Compensation	
Accuracy, 25°C	±0.25°C
Accuracy, +5°C to +45°C	±0.5°C
Accuracy, –40°C to +85°C	±1.25°C
Power Supply Voltage	+5VDC ±5%
Power Supply Current	30mA
Power Supply Sensitivity	±2µV/% RTI(3)
Mechanical Dimensions	2.28" x 2.26" x 0.60"
(h)(w)(d)	(58mm x 57mm x 15mm)
Environmental	
Operating Temperature Range	–40°C to +85°C
Storage Temperature Range	–40°C to +85°C
Relative Humidity	0 to 95% Noncondensing
Emissions EN61000-6-4	ISM, Group 1
Radiated, Conducted	Class A
Immunity EN61000-6-2	ISM, Group 1
RF	Performance A ±0.5% Span Error
ESD, EFT	Performance B

NOTES:
*Contact factory or your local Dataforth sales office for maximum values.
(1) Includes linearity, hysteresis and repeatability. Does not include CJC accuracy.
(2)This is equivalent to °C as follows: Type J 0.020 °C/°C, Types K, T 0.025°C/°C, Type E 0.016°C/°C, Types R, S 0.168°C/°C, Type N 0.037°C/°C, Type C, 0.072°C/°C.
(3) RTI = Referenced to input.

Ordering Information

Model	Type‡ TC	Input Range	Output Range†	Accuracy(1)	
SCM5B37J	J	–100°C to +760°C (–148°F to +1400°F)	3, 4	±0.03%	±0.26°C
SCM5B37K	K	–100°C to +1350°C (–148°F to +2462°F)	3, 4	±0.03%	±0.44°C
SCM5B37T	T	–100°C to +400°C (–148°F to +752°F)	3, 4	±0.03%	±0.15°C
SCM5B37E	E	0°C to +900°C (+32°F to +1652°F)	3, 4	±0.03%	±0.27°C
SCM5B37R	R	0°C to +1750°C (+32°F to +3182°F)	3, 4	±0.03%	±0.53°C
SCM5B37S	S	0°C to +1750°C (+32°F to +3182°F)	3, 4	±0.03%	±0.53°C
SCM5B37B	B	0°C to +1800°C (+32°F to +3272°F)	3, 4	±0.03%	±0.54°C
SCM5B37C	C	+350°C to +1300°C (+662°F to +2372°F)	3, 4	±0.03%	±0.29°C
SCM5B37N	N	–100°C to +1300°C (–148°F to +2372°F)	3, 4	±0.03%	±0.42°C

‡Thermocouple Alloy Combinations

Standards: DIN IEC 584, ANSI MC96-1-82, JIS C 1602-1981

Type	Material
J	Iron vs. Copper-Nickel
K	Nickel-Chromium vs. Nickel-Aluminum
T	Copper vs. Copper-Nickel
E	Nickel-Chromium vs. Copper-Nickel
R	Platinum-13% Rhodium vs. Platinum
S	Platinum-10% Rhodium vs. Platinum
B	Platinum-30% Rhodium vs. Platinum-6% Rhodium
C	Tungsten-5% Rhenium vs. Tungsten-26% Rhenium
N	Nickel-14.2% Chromium-1.4% Silicon vs. Nickel-4.4% Silicon- 0.1% Magnesium

†Output Ranges Available

Output Range	Part No. Suffix	Example
3. 0V to +5V	NONE	SCM5B37J
4. 0V to +10V	D	SCM5B37JD

©1995-2017 Dataforth Corporation, All Rights Reserved ISO9001:2008-Registered QMS

SCM5B38

Strain Gage Input Modules, Narrow Bandwidth

Description

Each SCM5B38 Strain Gage input module provides a single channel of strain gage input which is filtered, isolated, amplified, and converted to a high-level analog voltage output (Figure 1). This voltage output is logic switch controlled, which allows these modules to share a common analog bus without the requirement of external multiplexers.

The SCM5B modules are designed with a completely isolated computer side circuit which can be floated to ±50V from Power Common, pin 16. This complete isolation means that no connection is required between I/O Common and Power Common for proper operation of the output switch. If desired, the output switch can be turned on continuously by simply connecting pin 22, the Read-Enable pin, to I/O Common, pin 19.

The SCM5B38 can interface to full-bridge or half-bridge transducers with a nominal resistance of 100Ω to 10kΩ. A matched pair of bridge-completion resistors (to ±1mV at +10V excitation) allows use of low cost half-bridge or quarter-bridge transducers (Figures 2, 3, 4).

Strain gage excitation is provided from the module by a very stable 10V or 3.333V source. The excitation supply is fully isolated, allowing the amplifier inputs to operate over the full range of the excitation voltage. This feature offers significant flexibility in real world applications. Full scale sensitivities of 2mV/V, 3mV/V or 10mV/V are offered as standard. With 10V excitation, this results in ±20mV, ±30mV or ±100mV full scale input range producing ±5V full scale output.

After initial field side filtering the input signal is chopped by a proprietary chopper circuit. Isolation is provided by transformer coupling, again using a proprietary technique to suppress transmission of common mode spikes or surges. The module is powered from +5VDC, ±5%.

Features

- Interfaces to 100Ω Thru 10kΩ, Full-Bridge, Half-Bridge, or Quarter-Bridge Strain Gages
- High-Level Voltage Output
- 1500Vrms Transformer Isolation
- ANSI/IEEE C37.90.1 Transient Protection
- Input Protected to 240VAC Continuous
- Fully Isolated Excitation Supply
- 160dB CMR
- 95dB NMR at 60Hz, 90dB at 50Hz
- 4Hz Signal Bandwidth
- ±0.03% Accuracy
- ±0.01% Linearity
- ±1µV/°C Drift
- CSA C/US Certified
- CE and ATEX Compliant
- Mix and Match SCM5B Types on Backpanel

Special input circuits on the SCM5B38 module provide protection of the signal inputs and the isolated excitation supply up to 240VAC.

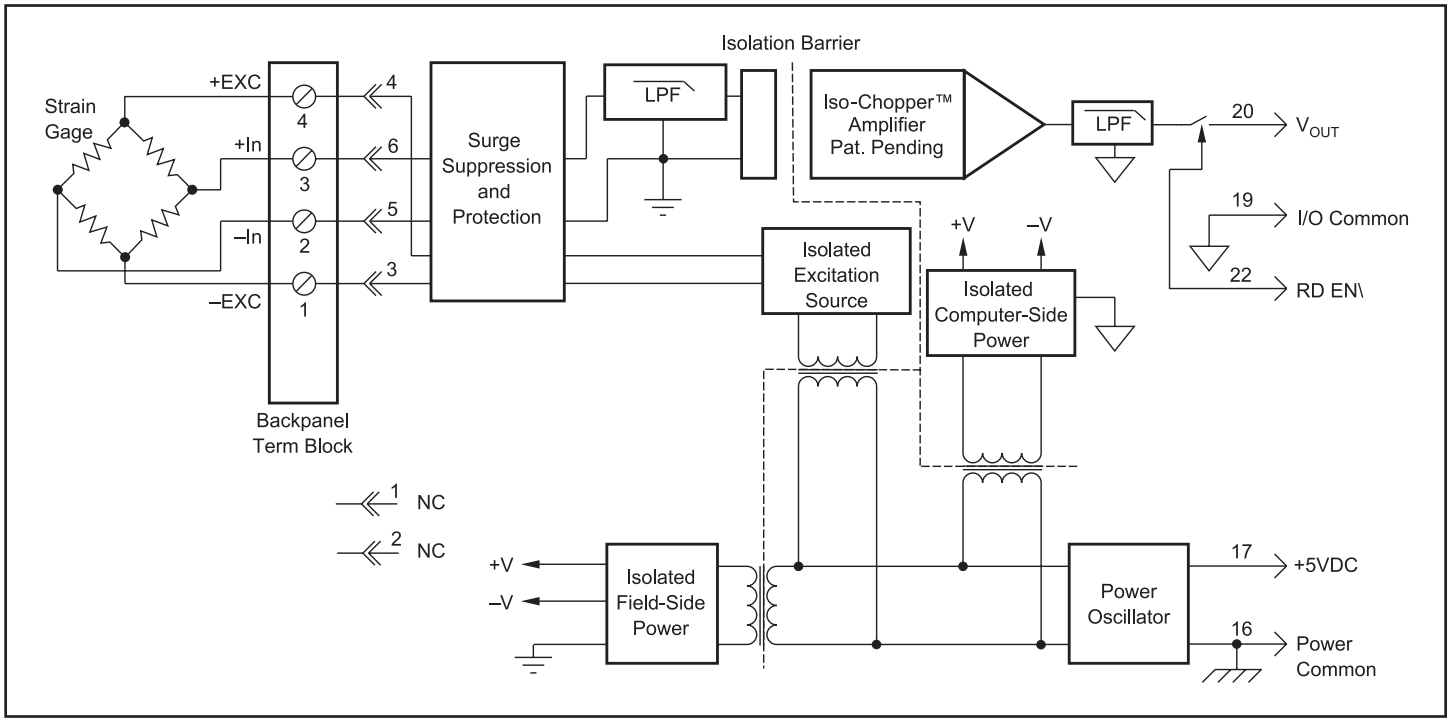

Figure 1: SCM5B38 Block Diagram

©1995-2017 Dataforth Corporation, All Rights Reserved ISO9001:2008-Registered QMS

Specifications

Typical* at T_A = +25°C and +5VDC power

Module	Full Bridge SCM5B38-31,-32,-35,-36,-37	Half Bridge SCM5B38-33,-34
Input Range	±10mV to ±100mV	*
Input Bias Current	±0.5nA	*
Input Resistance		
Normal	50MΩ	*
Power Off	40kΩ	*
Overload	40kΩ	*
Signal Input Protection		
Continuous	240Vrms max	*
Transient	ANSI/IEEE C37.90.1	*
Excitation Output (-32, -34, -35, -37)	+10V ±3mV	*
Load Resistance	300Ω to 10kΩ	*
Excitation Output (-31, -33, -36)	+3.333V ±2mV	*
Load Resistance	100Ω to 10kΩ	*
Excitation Load Regulation	±5ppm/mA	*
Excitation Stability	±15ppm/°C	*
Half Bridge Voltage Level (-34)	NA	+5V ±1mV
Half Bridge Voltage Level (-33)	NA	+1.667V ±1mV
Isolated Excitation Protection		
Continuous	240Vrms max	*
Transient	ANSI/IEEE C37.90.1	*
CMV, Input to Output		
Continuous	1500Vrms max	*
Transient	ANSI/IEEE C37.90.1	*
CMR (50 or 60Hz)	160dB	*
NMR	95dB at 60Hz, 90dB at 50Hz	*
Accuracy(2)	±0.03% Span	*
Linearity	±0.01% Span	*
Stability		
Input Offset	±1µV/°C	*
Output Offset	±20µV/°C	*
Gain	±25ppm of Reading/°C	*
Noise		
Input, 0.1 to 10Hz	0.2µVrms	1µVrms
Output, 100kHz	200µVrms	*
Bandwidth, –3dB	4Hz	*
Response Time, 90% Span	0.2s	*
Output Range	See Ordering Information	*
Output Resistance	50Ω	*
Output Protection	Continuous Short to Ground	*
Output Selection Time (to ±1mV of V_{OUT})	6µs at C_{load} = 0 to 2000pF	*
Output Current Limit	±8mA	*
Output Enable Control		
Max Logic "0"	+0.8V	*
Min Logic "1"	+2.4V	*
Max Logic "1"	+36V	*
Input Current "0,1"	0.5µA	*
Power Supply Voltage	+5VDC ±5%	*
Power Supply Current	170mA Full Exc. Load, 70mA No Exc. Load	*
Power Supply Sensitivity	±2µV/% RTI(3)	*
Mechanical Dimensions (h)(w)(d)	2.28" x 2.26" x 0.60" (58mm x 57mm x 15mm)	*
Environmental		
Operating Temperature Range	–40°C to +85°C	*
Storage Temperature Range	–40°C to +85°C	*
Relative Humidity	0 to 95% Noncondensing	*
Emissions EN61000-6-4	ISM, Group 1	*
Radiated, Conducted	Class A	*
Immunity EN61000-6-2	ISM, Group 1	*
RF	Performance A ±0.5% Span Error	*
ESD, EFT	Performance B	*

NOTES:
*Contact factory or your local Dataforth sales office for maximum values.
* Same as -31, -32, -35, -36, -37 modules.
(1) Strain element.
(2) Includes linearity, hysteresis and repeatability.
(3) RTI = Referenced to input.

Ordering Information

Model	Type Bridge Input	Input Range	Excitation	Sens.	Output Range†
SCM5B38-31	Full	–10mV to +10mV	+3.333V	3mV/V	1, 2
SCM5B38-32	Full	–30mV to +30mV	+10.0V	3mV/V	1, 2
SCM5B38-33	Half	–10mV to +10mV	+3.333V	3mV/V	1, 2
SCM5B38-34	Half	–30mV to +30mV	+10.0V	3mV/V	1, 2
SCM5B38-35	Full	–20mV to +20mV	+10.0V	2mV/V	1, 2
SCM5B38-36	Full	– 33.3mV to +33.3mV	+3.333V	10mV/V	1, 2
SCM5B38-37	Full	–100mV to +100mV	+10.0V	10mV/V	1, 2

†Output Ranges Available

Output Range	Part No. Suffix	Example
1. –5V to +5V	NONE	SCM5B38-31
2. –10V to +10V	D	SCM5B38-31D

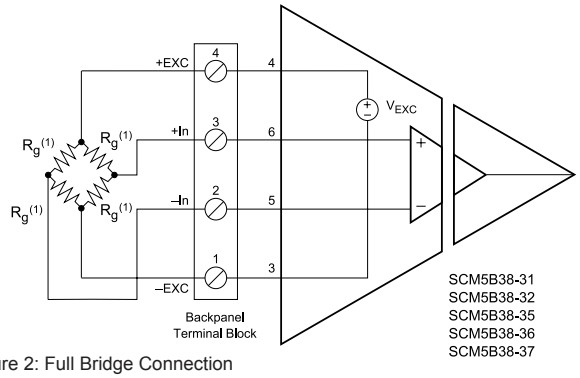

Figure 2: Full Bridge Connection

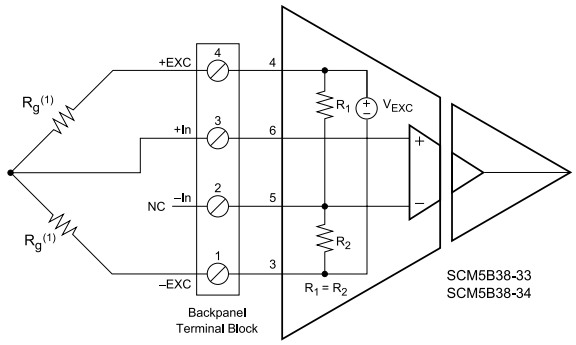

Figure 3: Half Bridge Connection

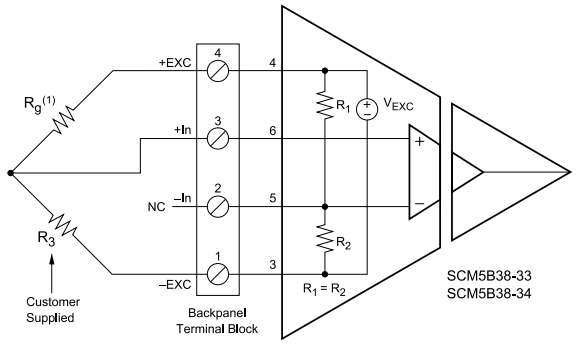

Figure 4: Quarter Bridge Connection

©1995-2017 Dataforth Corporation, All Rights Reserved ISO9001:2008-Registered QMS

SCM5B38

Strain Gage Input Modules, Wide Bandwidth

Description

Each SCM5B38 Strain Gage input module provides a single channel of strain gage input which is filtered, isolated, amplified, and converted to a high-level analog voltage output (Figure 1). This voltage output is logic switch controlled, which allows these modules to share a common analog bus without the requirement of external multiplexers.

The SCM5B modules are designed with a completely isolated computer side circuit which can be floated to ±50V from Power Common, pin 16. This complete isolation means that no connection is required between I/O Common and Power Common for proper operation of the output switch. If desired, the output switch can be turned on continuously by simply connecting pin 22, the Read- Enable pin, to I/O Common, pin 19.

The SCM5B38 can interface to full-bridge or half-bridge transducers with a nominal resistance of 100Ω to 10kΩ. A matched pair of bridge-completion resistors (to ±1mV at +10V excitation) allows use of low cost half-bridge or quarter-bridge transducers (Figures 2, 3, 4). The 10kHz bandwidth allows measurement of high speed processes such as vibration analysis.

Strain gage excitation is provided from the module by a very stable 10V or 3.333V source. The excitation supply is fully isolated, allowing the amplifier inputs to operate over the full range of the excitation voltage. This feature offers significant flexibility in real world applications. Full scale sensitivities of 2mV/V, 3mV/V or 10mV/V are offered as standard. With 10V excitation, this results in ±20mV, ±30mV or ±100mV full scale input range producing ±5V full scale output.

The input signal is processed through a wide bandwidth pre-amplifier on the field side of the isolation barrier. After amplification, the input signal is chopped by a proprietary chopper circuit. Isolation is provided by transformer coupling, again using a proprietary technique to suppress transmission of common mode spikes or surges. The module is powered from +5VDC, ±5%.

Special input circuits on the SCM5B38 module provide protection of the signal inputs and the isolated excitation supply up to 240VAC.

Features

- Interfaces to 100Ω Thru 10kΩ, Full-Bridge, Half-Bridge, or Quarter-Bridge Strain Gages
- High-Level Voltage Output
- 1500Vrms Transformer Isolation
- ANSI/IEEE C37.90.1 Transient Protection
- Input Protected to 240VAC Continuous
- Fully Isolated Excitation Supply
- 100dB CMR
- 10kHz Signal Bandwidth
- ±0.03% Accuracy
- ±0.01% Linearity
- ±1µV/°C Drift
- CSA C/US Certified
- CE and ATEX Compliant
- Mix and Match SCM5B Types on Backpanel

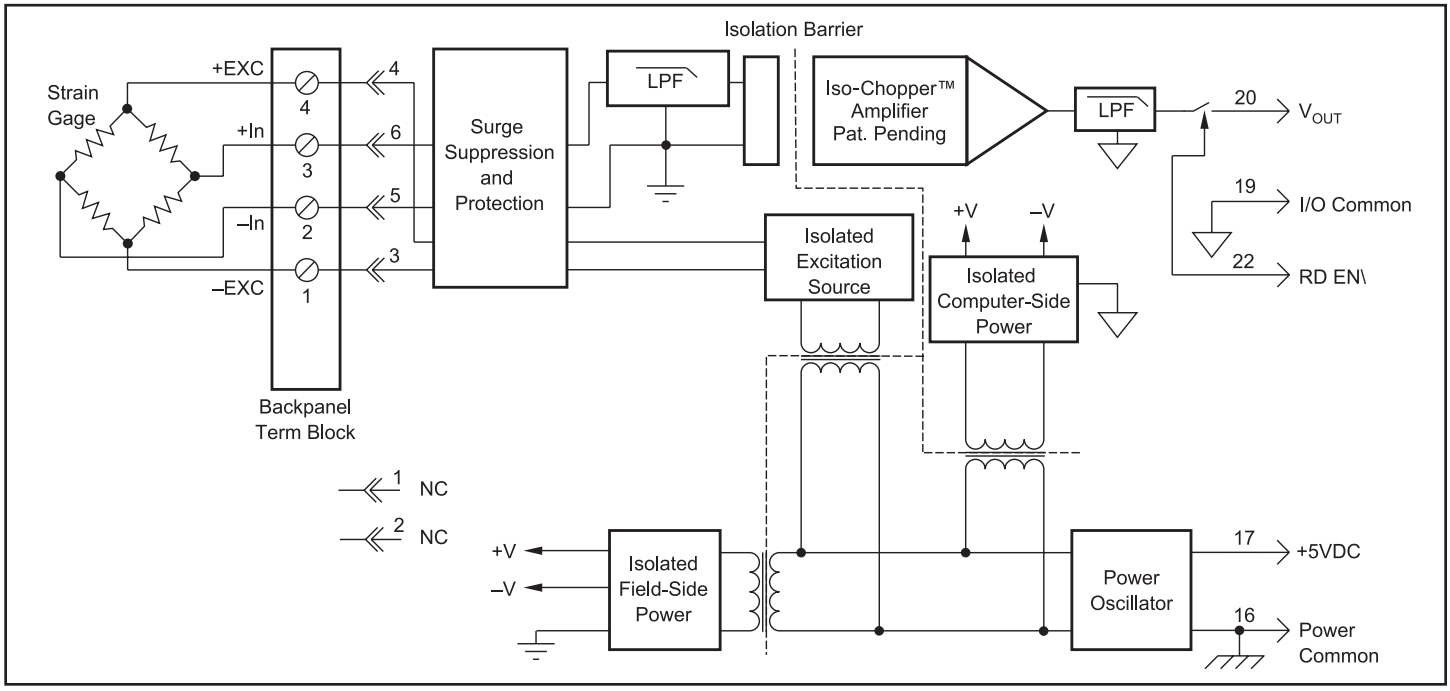

Figure 1: SCM5B38 Block Diagram

©1995-2017 Dataforth Corporation, All Rights Reserved ISO9001:2008-Registered QMS

Specifications

Typical* at T_A = +25°C and +5VDC power

Module	Full Bridge SCM5B38-01,-02,-05,-06,-07	Half Bridge SCM5B38-03,-04
Input Range	±10mV to ±100mV	*
Input Bias Current	±0.3nA	*
Input Resistance		
Normal	50MΩ	*
Power Off	40kΩ	*
Overload	40kΩ	*
Signal Input Protection		
Continuous	240Vrms max	*
Transient	ANSI/IEEE C37.90.1	*
Excitation Output (-02, -04, -05, -07)	+10V ±3mV	*
Load Resistance	300Ω to 10kΩ	*
Excitation Output (-01, -03, -06)	+3.333V ±2mV	*
Load Resistance	100Ω to 10kΩ	*
Excitation Load Regulation	±5ppm/mA	*
Excitation Stability	±15ppm/°C	*
Half Bridge Voltage Level (-04)	NA	+5V ±1mV
Half Bridge Voltage Level (-03)	NA	+1.667V ±1mV
Isolated Excitation Protection		
Continuous	240Vrms max	*
Transient	ANSI/IEEE C37.90.1	*
CMV, Input to Output		
Continuous	1500Vrms max	*
Transient	ANSI/IEEE C37.90.1	*
CMR (50 or 60Hz)	100dB	*
NMR (–3dB at 10kHz)	120dB per Decade above 10kHz	*
Accuracy(2)	±0.03% Span	*
Linearity	±0.01% Span	*
Stability		
Input Offset	±1µV/°C	*
Output Offset	±40µV/°C	*
Gain	±25ppm of Reading/°C	*
Noise		
Input, 0.1 to 10Hz	0.4µVrms	2µVrms
Output, 100kHz	10mVp-p	*
Bandwidth, –3dB	10kHz	*
Rise Time, 10 to 90% Span	35µs	*
Settling Time, to 0.1%	250µs	*
Output Range	See Ordering Information	*
Output Resistance	50Ω	*
Output Protection	Continuous Short to Ground	*
Output Selection Time (to ±1mV of V_{OUT})	6µs at C_{load} = 0 to 2000pF	*
Output Current Limit	±8mA	*
Output Enable Control		
Max Logic "0"	+0.8V	*
Min Logic "1"	+2.4V	*
Max Logic "1"	+36V	*
Input Current "0,1"	0.5µA	*
Power Supply Voltage	+5VDC ±5%	*
Power Supply Current	170mA Full Exc. Load, 70mA No Exc. Load	*
Power Supply Sensitivity	±2µV/% RTI(3)	*
Mechanical Dimensions (h)(w)(d)	2.28" x 2.26" x 0.60" (58mm x 57mm x 15mm)	*
Environmental		
Operating Temperature Range	–40°C to +85°C	*
Storage Temperature Range	–40°C to +85°C	*
Relative Humidity	0 to 95% Noncondensing	*
Emissions EN61000-6-4	ISM, Group 1	*
Radiated, Conducted	Class A	*
Immunity EN61000-6-2	ISM, Group 1	*
RF	Performance A ±0.5% Span Error	*
ESD, EFT	Performance B	*

*Contact factory or your local Dataforth sales office for maximum values.

NOTES:

* Same as –01, –02, –05, –06, –07 modules.

(1) Strain element. (2) Includes linearity, hysteresis and repeatability. (3) RTI = Referenced to input.

Ordering Information

Model (10kHz)	Type Bridge Input	Input Range	Excitation	Sens.	Output Range†
SCM5B38-01	Full	–10mV to +10mV	+3.333V	3mV/V	1, 2
SCM5B38-02	Full	–30mV to +30mV	+10.0V	3mV/V	1, 2
SCM5B38-03	Half	–10mV to +10mV	+3.333V	3mV/V	1, 2
SCM5B38-04	Half	–30mV to +30mV	+10.0V	3mV/V	1, 2
SCM5B38-05	Full	–20mV to +20mV	+10.0V	2mV/V	1, 2
SCM5B38-06	Full	– 33.3mV to +33.3mV	+3.333V	10mV/V	1, 2
SCM5B38-07	Full	–100mV to +100mV	+10.0V	10mV/V	1, 2

†Output Ranges Available

Output Range	Part No. Suffix	Example
1. –5V to +5V	NONE	SCM5B38-01
2. –10V to +10V	D	SCM5B38-01D

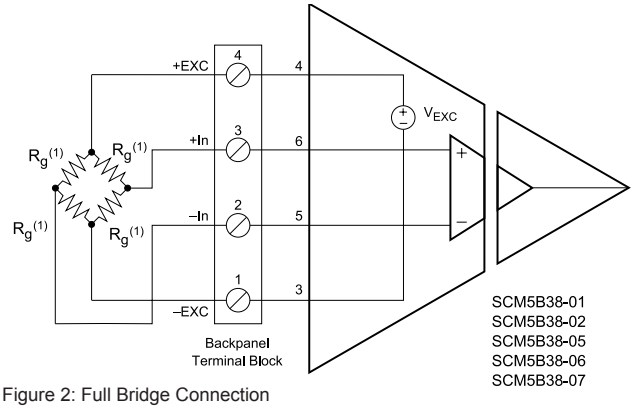

Figure 2: Full Bridge Connection

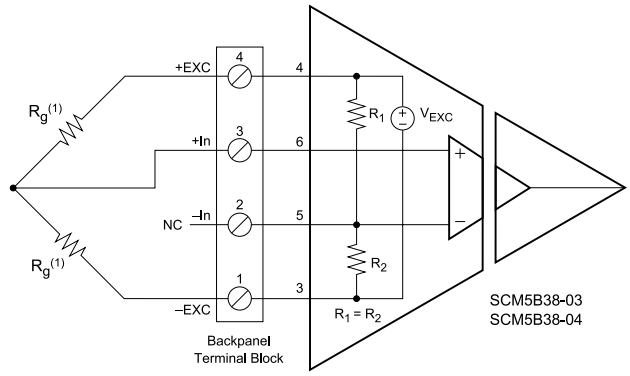

Figure 3: Half Bridge Connection

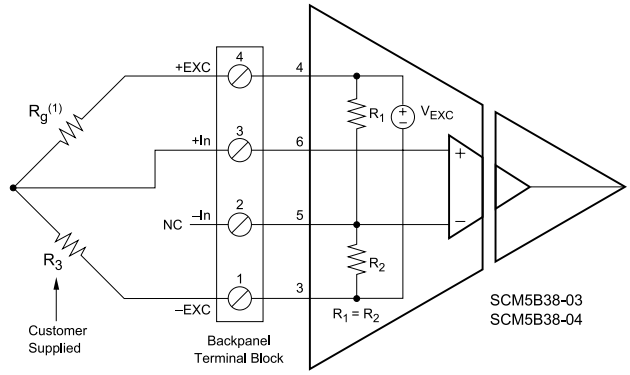

Figure 4: Quarter Bridge Connection

©1995-2017 Dataforth Corporation, All Rights Reserved ISO9001:2008-Registered QMS

SCM5B39

Current Output Modules

Description

Each SCM5B39 current output module provides a single channel of analog output. The track-and-hold circuit in the input stage can be operated in a hold mode where one DAC can supply many output modules, or a track mode where one DAC is dedicated to each module. In addition to the track-and-hold circuit, each module provides signal buffering, isolation, filtering, and conversion to a high-level current output (Figure 1).

Setting of the track or hold mode is controlled by the logic state of WR EN\, module pin 23. When pin 23 is low, the track mode is enabled. If pin 23 is high, the hold mode is enabled. The module is designed with a completely isolated computer side circuit which can be floated to ±50V from Power Common, pin 16. This complete isolation means that no connection is required between I/O Common and Power Common for proper operation of the track and hold circuit. For a low state, simply connect pin 23, the Write-Enable pin, to I/O Common, pin 19.

The SCMPB02 and SCMPB06 backpanels allow host computer control of the WR EN\ control line, which allows multiplexing of one host DAC to up to 64 SCM5B39 output modules. During power-up, the output remains at 0mA for 100ms on all models except the SCM5B39-07, which allows the track-and-hold circuit to be initialized.

A special circuit in the output stage of the module provides protection against accidental connection of power-line voltages up to 240VAC on all models.

Features

- Accepts High-Level Voltage or Process Current Input
- Unipolar or Bipolar Current Output
- 1500Vrms Transformer Isolation
- ANSI/IEEE C37.90.1 Transient Protection
- Output Protected to 240VAC Continuous
- 110dB CMR
- 400Hz Signal Bandwidth
- ±0.03% Accuracy
- ±0.005% Linearity
- CSA C/US Certified
- CE and ATEX Compliant
- Mix and Match SCM5B Types on Backpanel

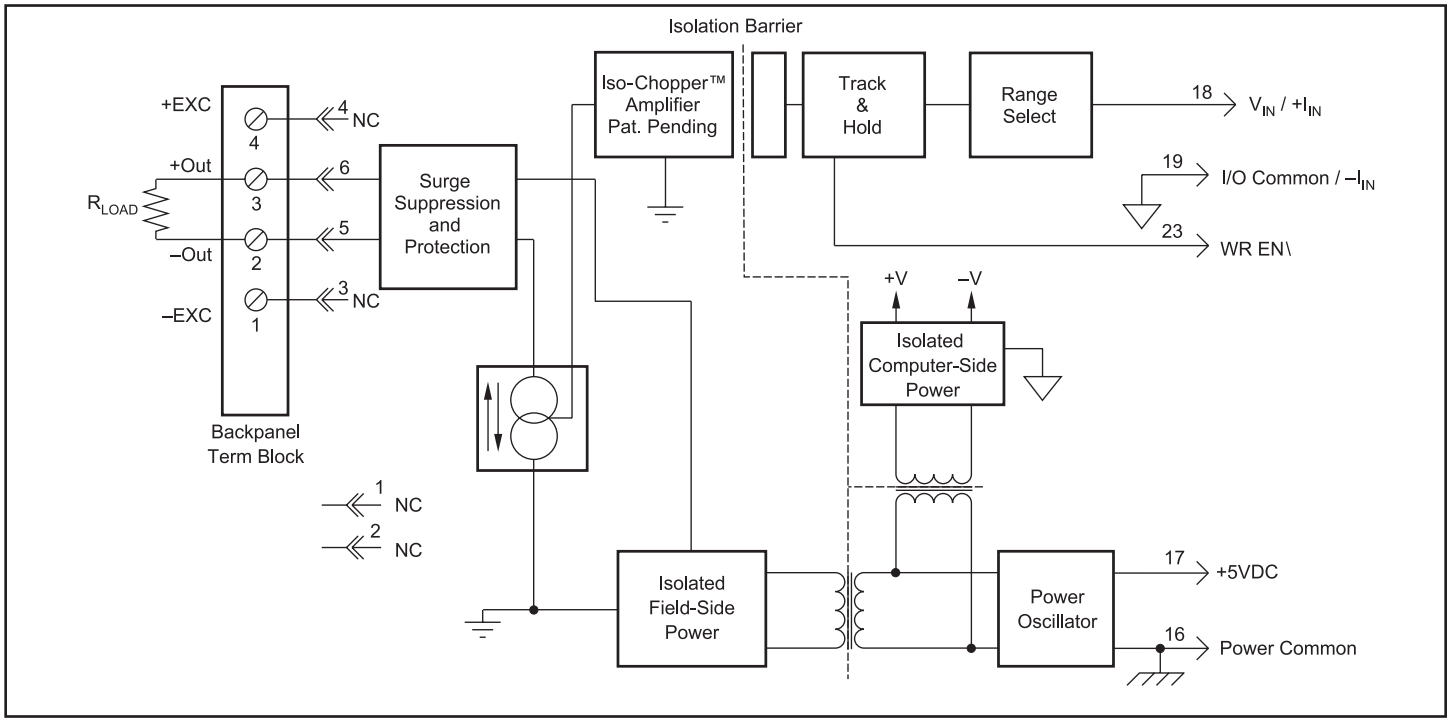

Figure 1: SCM5B39 Block Diagram

©1995-2017 Dataforth Corporation, All Rights Reserved ISO9001:2008-Registered QMS

Specifications

Typical* at T_A = +25°C and +5VDC power

Module	Unipolar Output Current SCM5B39-01,-02,-03,-04,-05	Bipolar Output Current SCM5B39-07
Input Voltage Range	±5V or 0V to +5V	±10V
Input Current Range (-05)	0 to 20mA	N/A
Input Voltage Maximum	±36V (no damage)	*
Input Current, Maximum (-05)	75mA (no damage)	N/A
Input Resistance	50MΩ	2MΩ
Input Resistance (-05)	250Ω	N/A
Output Current Range	0 to 20mA or 4 to 20mA	±20mA
Power-Up Delay(1)	100ms	N/A
Current Out	0mA	N/A
Over Range Capability	10%	*
Output Compliance Voltage (Open Circuit)	22VDC	±15VDC
Load Resistance Range	0 to 650Ω (0 to 750Ω for Power Supply Voltage greater than 4.95VDC)	0 to 450Ω (0 to 500Ω for Power Supply Voltage greater than 4.95VDC)
Output I Under Fault, max	26mA	*
Output Protection		
Continuous	240Vrms max	*
Transient	ANSI/IEEE C37.90.1	*
CMV, Output to Input		
Continuous	1500Vrms max	*
Transient	ANSI/IEEE C37.90.1	*
CMR (50Hz or 60Hz)	110dB	*
NMR (–3dB)	80dB per Decade above 400Hz	80dB per Decade above 275Hz
Accuracy	±0.03% Span	±0.05% Span
Linearity	±0.005% Span	±0.03% Span
Stability		
Offset	±0.5µA/°C	*
Gain	±20ppm/°C	±40ppm/°C
Noise		
Output Ripple, 100kHz	10µAp-p	*
Bandwidth, –3dB	400Hz	275Hz
Rise Time, 10 to 90% Span	1.0ms	1.2ms
Sample and Hold		
Output Droop Rate	40µA/s	*
Acquisition Time	50µs	*
Track-and-Hold Enable Control		
Max Logic "0"	+0.8V	*
Min Logic "1"	+2.4V	*
Max Logic "1"	+36V	*
Input Current "0"	0.5µA	*
Power Supply Voltage	+5VDC ±5%	*
Power Supply Current	170mA	130mA
Power Supply Sensitivity	±0.5µA/% typ	*
Mechanical Dimensions (h)(w)(d)	2.28" x 2.26" x 0.6" (58mm x 57mm x 15mm)	*
Environmental		
Operating Temp. Range	–40°C to +85°C	*
Storage Temp. Range	–40°C to +85°C	*
Relative Humidity	0 to 95% Noncondensing	*
Emissions EN61000-6-4	ISM, Group 1	*
Radiated, Conducted	Class A	*
Immunity EN61000-6-2	ISM, Group 1	*
RF	Performance A ±0.5% Span Error	*
ESD, EFT	Performance B	*

NOTES:
*Contact factory or your local Dataforth sales office for maximum values.
* Same as -01, -02, -03, -04, -05 modules.
(1) See Product Description for further details.

Ordering Information

Model	Input Range	Output Range	Bandwidth
SCM5B39-01	0V to +5V	4mA to 20mA	400Hz
SCM5B39-02	–5V to +5V	4mA to 20mA	400Hz
SCM5B39-03	0V to +5V	0mA to 20mA	400Hz
SCM5B39-04	–5V to +5V	0mA to 20mA	400Hz
SCM5B39-05	0mA to 20mA	0mA to 20mA	400Hz
SCM5B39-07	–10V to +10V	–20mA to +20mA	275Hz

Refer to SCM5B392 specifications, p.27, for additional current output models.

©1995-2017 Dataforth Corporation, All Rights Reserved ISO9001:2008-Registered QMS

SCM5B392

Matched-Pair Servo/Motor Controller Modules

Description

The SCM5B392 servo/motor controller module set is designed to solve the problem of extending a servo or motor controller signal a long distance with the possibility for noise pickup and/or contacting hazardous voltages. Each SCM5B392 module set is made up of two modules: a voltage input/current output module and a current input/voltage output module (Figure 1).

The voltage input module connects to the servo or motor controller voltage output and provides an isolated 4 to 20mA output which connects to the input of the current input module. The current input module isolates and provides an output voltage identical to that of the servo or motor controller. Thus the original control signal has been isolated (twice) and extended via a 4 to 20mA current loop.

Several mounting options are available for the SCM5B392 module set. If a large number of channels are required, the SCMPB01 16 channel backpanel and SCMPB05 8 channel backpanel are available. Smaller channel numbers can be accommodated with the SCMPB03 single channel mounting panel and SCMPB04 dual channel mounting panel. These can be mounted on a DIN rail.

Features

- Extends the Distance and Isolates Servo/Motor Controller Signals
- Provides Isolated Current Loop Interface Between Controller and Motor or Actuator
- Accepts High-Level Voltage Inputs up to ±10V
- Provides High-Level Voltage Outputs up to ±10V
- 1500VrmsTransformer Isolation (3000Vrms Total Loop)
- ANSI/IEEE C37.90.1 Transient Protection
- Current Loop is Protected to 240VAC Continuous
- 1kHz Signal Bandwidth
- 100dB CMR
- ±0.06% Total Loop Accuracy
- ±0.01% Total Loop Linearity
- CSA C/US Certified
- CE and ATEX Compliant
- Mix and Match SCM5B Types on Backpanel

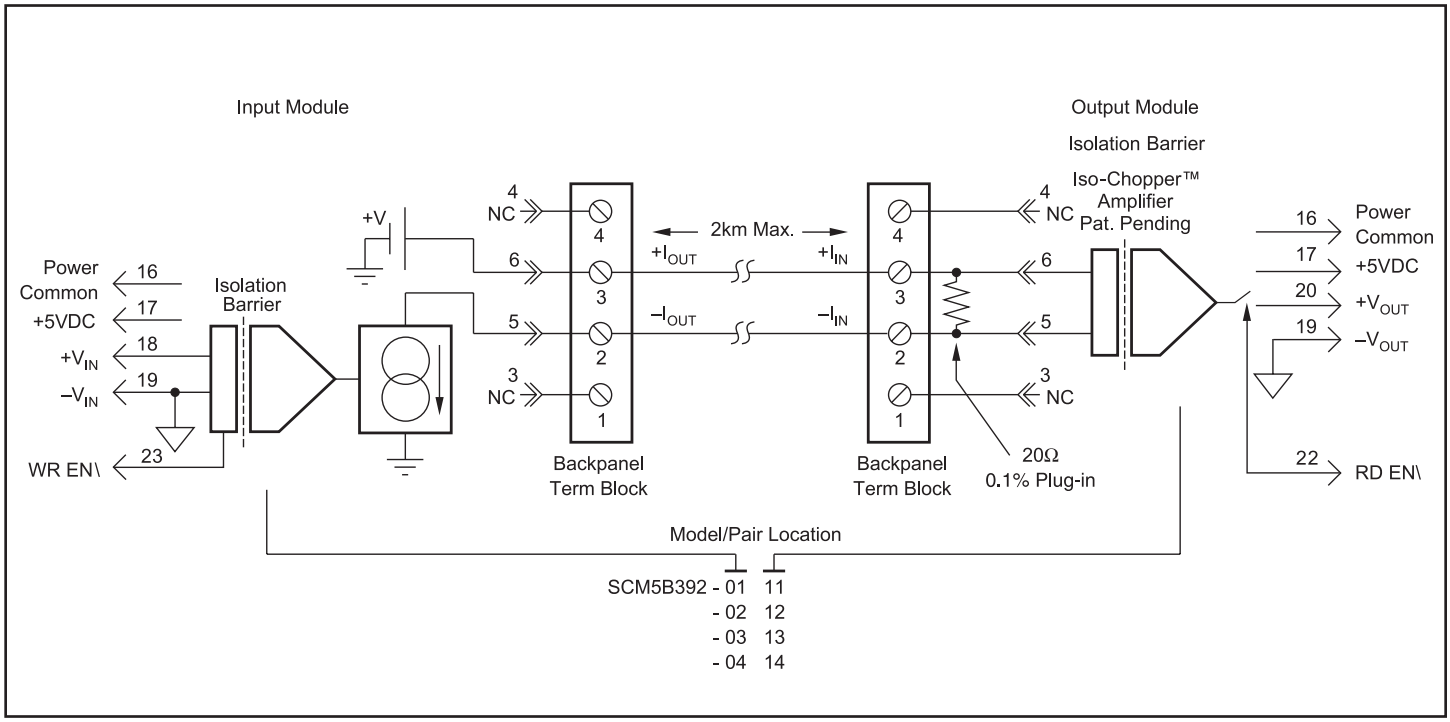

Figure 1: SCM5B392 Block Diagram

©1995-2017 Dataforth Corporation, All Rights Reserved ISO9001:2008-Registered QMS

Specifications Typical* at T_A = +25°C and +5VDC power

Module	SCM5B392-01,-02,-03,-04 (Input)	SCM5B392-11,-12,-13,-14 (Output)
Input Range	See Ordering Information	4mA to 20mA
Input Resistance	50MΩ (-01,-02) 2MΩ (-03,-04)	20Ω
Accuracy	N/A	±0.1%
Stability	N/A	±10ppm/°C
Input Protection		
Continuous	±36V (no damage)	240Vrms max
Transient	N/A	ANSI/IEEE C37.90.1
Output Range	4mA to 20mA	See Ordering Information
Over Range Capability	10%	N/A
Output Compliance Voltage		
(Open Circuit)	22VDC	N/A
Loop Resistance Range	0 to 600Ω (0 to 700Ω for Power Supply Voltage greater than 4.95VDC)	N/A
Output Resistance	N/A	50Ω
Output Selection Time	N/A	6µs at C_{load} = 0 to 2000pF
(to ±1mV of V_{OUT})		
Output Current Limit	26mA	+8mA
Output Protection		
Continuous	240Vrms max	Short to Ground
Transient	ANSI/IEEE C37.90.1	N/A
CMV		
Continuous	1500Vrms max, output to input	*
Transient	ANSI/IEEE C37.90.1	*
CMR (50Hz or 60Hz)	100dB	*
NMR (–3dB at 1KHz)	80dB per Decade above 1kHz	120dB per Decade above 1kHz
Accuracy	±0.03% Span	*
Linearity	±0.005% Span	*
Stability		
Offset	±0.5µA/°C	±50µV/°C
Gain	±20ppm/°C	±25ppm/°C
Noise		
Output, 100kHz	10µAp-p	200µVrms
Bandwidth, –3dB	1kHz	1kHz
Rise Time, 10 to 90% Span	340µs	750µs
Sample and Hold		
Output Droop Rate	40µA/s	N/A
Acquisition Time	50µs	N/A
Enable Control		
Max Logic "0"	+0.8V	*
Min Logic "1"	+2.4V	*
Max Logic "1"	+36V	*
Input Current "0"	0.5µA	*
Power Supply Voltage	+5VDC ±5%	*
Power Supply Current	170mA	30mA
Power Supply Sensitivity	±0.5µA/% typ	±1µA/% RTI(1)
Mechanical Dimensions (h)(w)(d)	2.28" x 2.26" x 0.6" (58mm x 57mm x 15mm)	*
Environmental		
Operating Temp. Range	–40°C to +85°C	*
Storage Temp. Range	–40°C to +85°C	*
Relative Humidity	0 to 95% Noncondensing	*
Emissions EN61000-6-4	ISM, Group 1	*
Radiated, Conducted	Class A	*
Immunity EN61000-6-2	ISM, Group 1	*
RF	Performance A ±0.5% Span Error	*
ESD, EFT	Performance B	*

NOTES:
*Contact factory or your local Dataforth sales office for maximum values.
* Same as -01, -02, -03, -04 modules.
(1) RTI = Referenced to input.

Ordering Information (for module pairs)

Model	Input Range	Interface	Output Range
SCM5B392-0111	0V to +5V	4mA to 20mA	0V to +5V
SCM5B392-0212	–5V to +5V	4mA to 20mA	–5V to +5V
SCM5B392-0313	0V to +10V	4mA to 20mA	0V to +10V
SCM5B392-0414	–10V to +10V	4mA to 20mA	–10V to +10V

Ordering Information (for single modules)

Model	Input Range	Output Range	Bandwidth
SCM5B392-01	0V to +5V	4mA to 20mA	1kHz
SCM5B392-02	–5V to +5V	4mA to 20mA	1kHz
SCM5B392-03	0V to +10V	4mA to 20mA	1kHz
SCM5B392-04	–10V to +10V	4mA to 20mA	1kHz
SCM5B392-11	4mA to 20mA	0V to +5V	1kHz
SCM5B392-12	4mA to 20mA	–5V to +5V	1kHz
SCM5B392-13	4mA to 20mA	0V to +10V	1kHz
SCM5B392-14	4mA to 20mA	–10V to +10V	1kHz

©1995-2017 Dataforth Corporation, All Rights Reserved ISO9001:2008-Registered QMS

SCM5B40/41

Analog Voltage Input Modules, Wide Bandwidth

Description

Each SCM5B40 and SCM5B41 wide bandwidth voltage input module provides a single channel of analog input which is amplified, isolated, and converted to a high-level analog voltage output (Figure 1). This voltage output is logic-switch controlled, allowing these modules to share a common analog bus without the requirement of external multiplexers.

The SCM5B modules are designed with a completely isolated computer side circuit which can be floated to ±50V from Power Common, pin 16. This complete isolation means that no connection is required between I/O Common and Power Common for proper operation of the output switch. If desired, the output switch can be turned on continuously by simply connecting pin 22, the Read-Enable pin, to I/O Common, pin 19.

The input signal is processed through a wide bandwidth pre-amplifier on the field side of the isolation barrier. After amplification, the input signal is chopped by a proprietary chopper circuit. Isolation is provided by transformer coupling, again using a proprietary technique to suppress transmission of common mode spikes or surges. The module is powered from +5VDC, ±5%.

A special input circuit on the SCM5B40 and SCM5B41 modules provides protection against accidental connection of power-line voltages up to 240VAC.

Features

- Accepts Millivolt and Voltage Level Signals
- High-Level Voltage Outputs
- 1500Vrms Transformer Isolation
- ANSI/IEEE C37.90.1 Transient Protection
- Input Protected to 240VAC Continuous
- 100dB CMR
- 10kHz Signal Bandwidth
- ±0.03% Accuracy
- ±0.01% Linearity
- ±1µV/°C Drift
- CSA C/US Certified
- CE and ATEX Compliant
- Mix and Match SCM5B Types on Backpanel

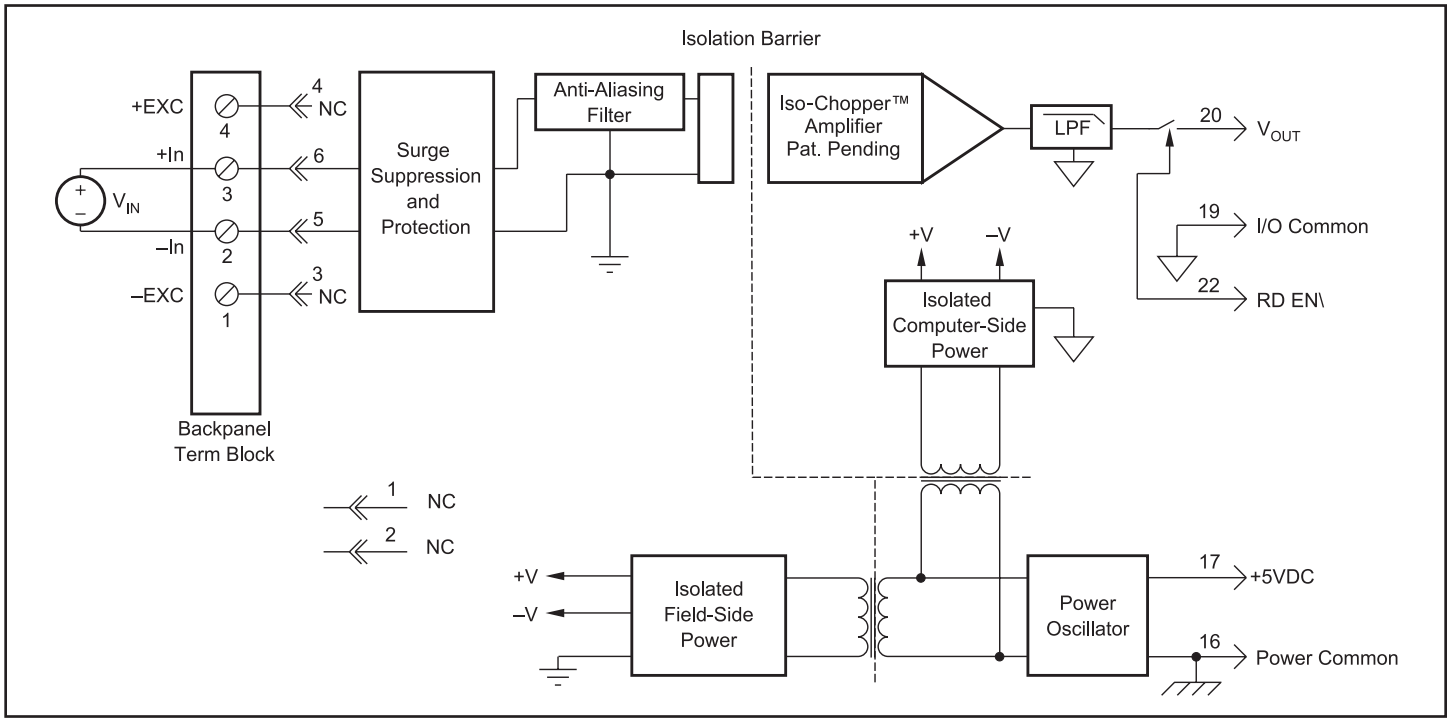

Figure 1: SCM5B40/41 Block Diagram

©1995-2017 Dataforth Corporation, All Rights Reserved ISO9001:2008-Registered QMS

Specifications

Typical* at T_A = +25°C and +5VDC power

Module	SCM5B40	SCM5B41
Input Range	±10mV to ±1V	±1V to ±40V
Input Bias Current	±0.5nA	±0.05nA
Input Resistance		
Normal	200MΩ	650kΩ(-01 thru -04) 2MΩ(-05 thru -10)
Power Off	40kΩ	650kΩ(-01 thru -04) 2MΩ(-05 thru -10)
Overload	40kΩ	650kΩ(-01 thru -04) 2MΩ(-05 thru -10)
Input Protection		
Continuous	240Vrms max	*
Transient	ANSI/IEEE C37.90.1	*
CMV, Input to Output		*
Continuous	1500Vrms max	*
Transient	ANSI/IEEE C37.90.1	*
CMR (50Hz or 60Hz)	100dB	*
NMR (–3dB at 10kHz)	120dB per Decade above 10kHz	
Accuracy(1)	±0.03% Span	*
Linearity	±0.01% Span	*
Stability		
Input Offset	±1µV/°C	±20µV/°C
Output Offset	±40µV/°C	*
Gain	±25ppm/°C	±50ppm/°C
Noise		
Input, 0.1 to 10Hz	0.4µVrms	2µVrms
Output, 100kHz	10mVp-p	*
Bandwidth, –3dB	10kHz	*
Rise Time, 10 to 90% Span	35µs	*
Settling Time, to 0.1%	250µs	*
Output Range	See Ordering Information	*
Output Resistance	50Ω	*
Output Protection	Continuous Short to Ground	*
Output Selection Time	6µs at C_{load} = 0 to 2000pF	
(to ±1mV of V_{OUT})		*
Output Current Limit	±8mA	*
Output Enable Control		
Max Logic "0"	+0.8V	*
Min Logic "1"	+2.4V	*
Max Logic "1"	+36V	*
Input Current "0,1"	0.5µA	*
Power Supply Voltage	+5VDC ±5%	*
Power Supply Current	30mA	*
Power Supply Sensitivity	±2µV/% RTI(2)	±200µV/% RTI(2)
Mechanical Dimensions (h)(w)(d)	2.28" x 2.26" x 0.60" (58mm x 57mm x 15mm)	*
Environmental		
Operating Temp. Range	–40°C to +85°C	*
Storage Temp. Range	–40°C to +85°C	*
Relative Humidity	0 to 95% Noncondensing	*
Emissions EN61000-6-4	ISM, Group 1	*
Radiated, Conducted	Class A	*
Immunity EN61000-6-2	ISM, Group 1	*
RF	Performance A ±0.5% Span Error	*
ESD,EFT	Performance B	*

NOTES:
*Contact factory or your local Dataforth sales office for maximum values.
* Same specification as SCM5B40.
(1) Includes linearity, hysteresis and repeatability.
(2) RTI = Referenced to input.
(3) Same as SCM5B41-01 with 200MΩ input resistance.

Ordering Information

Model	Input Range	Output Range†
SCM5B40-01	–10mV to +10mV	1, 2
SCM5B40-02	–50mV to +50mV	1, 2
SCM5B40-03	–100mV to +100mV	1, 2
SCM5B40-04	–10mV to +10mV	3, 4
SCM5B40-05	–50mV to +50mV	3, 4
SCM5B40-06	–100mV to +100mV	3, 4
SCM5B40-07(3)	–1V to +1V	1, 2
SCM5B41-01	–1V to +1V	1, 2
SCM5B41-02	–5V to +5V	1, 2
SCM5B41-03	–10V to +10V	1, 2
SCM5B41-04	–1V to +1V	3, 4
SCM5B41-05	–5V to +5V	3, 4
SCM5B41-06	–10V to +10V	3, 4
SCM5B41-07	–20V to +20V	1, 2
SCM5B41-08	–20V to +20V	3, 4
SCM5B41-09	–40V to +40V	1, 2
SCM5B41-10	–40V to +40V	3, 4

†Output Ranges Available

Output Range	Part No. Suffix	Example
1. –5V to +5V	NONE	SCM5B40-01
2. –10V to +10V	D	SCM5B40-01D
3. 0V to +5V	NONE	SCM5B40-04
4. 0V to +10V	D	SCM5B40-04D

©1995-2017 Dataforth Corporation, All Rights Reserved ISO9001:2008-Registered QMS

SCM5B42

2-Wire Transmitter Interface Modules

Description

Each SCM5B42 2-wire transmitter interface module provides a single channel which accepts a 4 to 20mA process current input and provides a standard +1 to +5V or +2 to +10V output signal (Figure 1). An isolated +20VDC regulated power supply is provided to power the current transmitter. This allows a 2-wire loop powered transmitter to be directly connected to the SCM5B42 without requiring an external power supply. The regulated supply will provide a nominal +20VDC at a loop current of 4mA to 20mA.

The SCM5B42 will provide a 1500V isolation barrier for non-isolated 2-wire field transmitters. It can also be used when additional isolation is required between an isolated 2-wire transmitter and the input stage of the control room computer.

The voltage output is logic switch controlled, which allows these modules to share a common analog bus without the requirement of external multiplexers.

The SCM5B modules are designed with a completely isolated computer side circuit which can be floated to ±50V from Power Common, pin 16. This complete isolation means that no connection is required between I/O Common and Power Common for proper operation of the output switch. If desired, the output switch can be turned on continuously by simply connecting pin 22, the Read-Enable pin, to I/O Common, pin 19.

A precision 20Ω current conversion resistor is supplied with the module. Sockets are provided on the SCMPB01/02/03/04/05/06/07 backpanels to allow installation of this resistor. Extra resistors are available under part number SCMXR1. All field inputs are fully protected from accidental connection of power-line voltages up to 240VAC. The module has a 3dB bandwidth of 100Hz. Signal filtering is accomplished with a six-pole filter, with two poles on the field side of the isolation barrier, and the other four on the computer side.

Features

- Isolated +20VDC Current Loop Supply
- Provides Isolation for Non-Isolated 2-Wire Transmitters
- High-Level Voltage Output +1V to +5V or +2V to +10V
- 1500Vrms Transformer Isolation
- ANSI/IEEE C37.90.1 Transient Protection
- Input Protected to 240VAC Continuous
- 100dB CMR
- 100Hz Signal Bandwidth
- ±0.03% Accuracy
- ±0.005% Linearity
- CSA C/US Certified
- CE and ATEX Compliant
- Mix and Match SCM5B Types on Backpanel

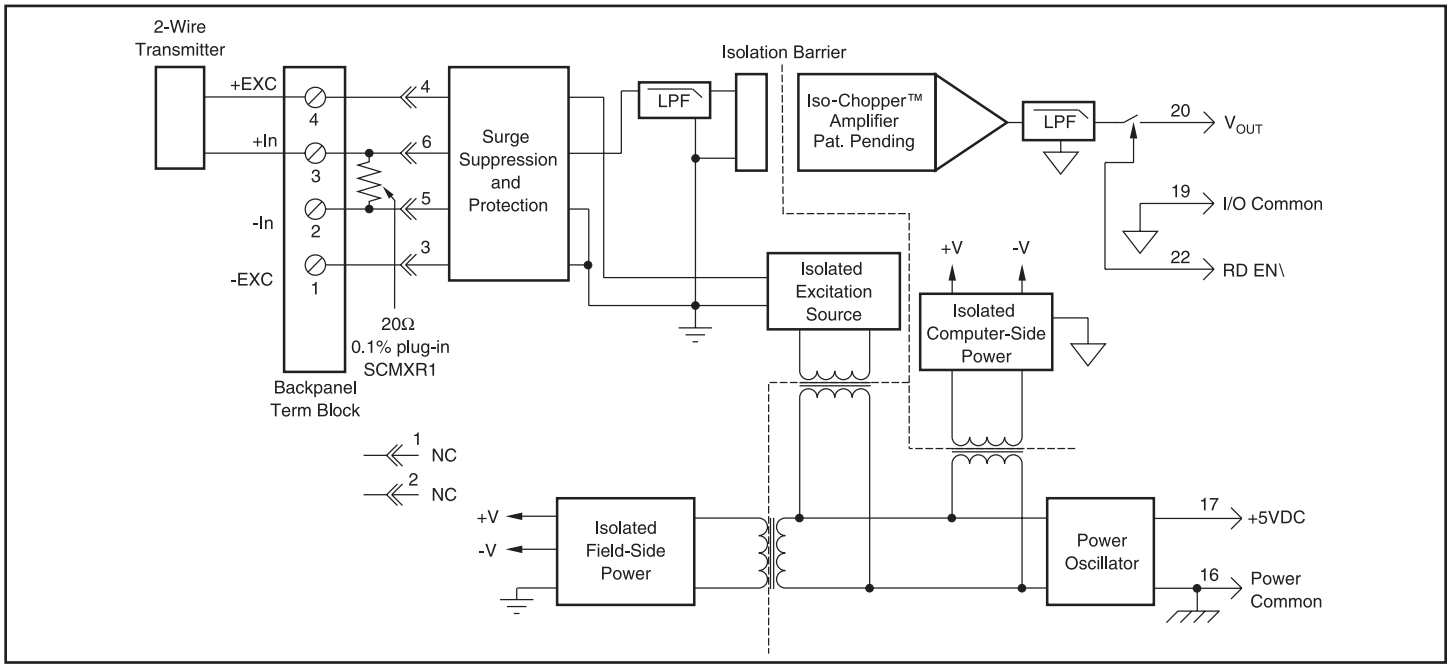

Figure 1: SCM5B42 Block Diagram

©1995-2017 Dataforth Corporation, All Rights Reserved ISO9001:2008-Registered QMS

Specifications

Typical* at T_A = +25°C and +5VDC power

Module	SCM5B42
Input Range	4mA to 20mA
Input Resistor	
Value	20.00Ω
Accuracy	±0.1%
Stability	±10ppm/°C
Loop Supply Voltage	Nominal 20V at 4mA to 20mA
Isolated Excitation Protection	
Continuous	240Vrms max
Transient	ANSI/IEEE C37.90.1
Input Protection	
Continuous	240Vrms max
Transient	ANSI/IEEE C37.90.1
CMV, Input to Output	
Continuous	1500Vrms max
Transient	ANSI/IEEE C37.90.1
CMR (50 or 60Hz)	100dB
NMR (–3dB at 100Hz)	120dB per Decade above 100Hz
Accuracy(1)	±0.03% Span
Linearity	±0.005% Span
Stability	
Input Offset	±1µV/°C
Output Offset	±40µV/°C
Gain	±25ppm/°C of Reading
Noise	
Input, 0.1 to 10Hz	10nArms
Output, 100kHz	500µVrms
Bandwidth, –3dB	100Hz
Response Time, 90% Span	4mS
Output Range	+1V to +5V or +2V to +10V
Output Resistance	50Ω
Output Protection	Continuous Short to Ground
Output Selection Time (to ±1mV of V_{OUT}).	6µs at C_{load} = 0 to 2000pF
Output Current Limit	+8mA
Output Enable Control	
Max Logic "0"	+0.8V
Min Logic "1"	+2.4V
Max Logic "1"	+36V
Input Current "0,1"	0.5µA
Power Supply Voltage	+5VDC ±5%
Power Supply Current	180mA at Transmitter Load of 20mA 100mA at Transmitter Load of 4mA
Power Supply Sensitivity	±10µV/% RTI(2)
Mechanical Dimensions (h)(w)(d)	2.28" x 2.26" x 0.60" (58mm x 57mm x 15mm)
Environmental	
Operating Temp. Range	–40°C to +85°C
Storage Temp. Range	–40°C to +85°C
Relative Humidity	0 to 95% Noncondensing
Emissions EN61000-6-4	ISM, Group 1
Radiated, Conducted	Class A
Immunity EN61000-6-2	ISM, Group 1
RF	Performance A ±0.5% Span Error
ESD,EFT	Performance B

NOTES:
*Contact factory or your local Dataforth sales office for maximum values.
(1) Includes linearity, hysteresis and repeatability. Does not include SCMXR1 accuracy.
(2) RTI = Referenced to input.

Ordering Information

Model	Input Range	Output Range
SCM5B42-01	4mA to 20mA	+1V to +5V
SCM5B42-02	4mA to 20mA	+2V to +10V

©1995-2017 Dataforth Corporation, All Rights Reserved ISO9001:2008-Registered QMS

SCM5B43

General Purpose Input Modules, with DC Excitation

Description

Each SCM5B43 general purpose input module provides a single channel of transducer input which is filtered, isolated, scaled, and converted to a high-level analog voltage output (Figure 1). This voltage output is logic switch controlled, which allows these modules to share a common analog bus without the requirement of external multiplexers.

The SCM5B modules are designed with a completely isolated computer side circuit which can be floated to ±50V from Power Common, pin 16. This complete isolation means that no connection is required between I/O Common and Power Common for proper operation of the output switch. If desired, the output switch can be turned on continuously by simply connecting pin 22, the Read-Enable pin, to I/O Common, pin 19.

The SCM5B43 can interface to devices which require a precision 10VDC excitation supply. The 1kHz bandwidth significantly reduces ripple and noise inherent in these devices.

Transducer excitation is provided from the module by a very stable 10V source. The excitation supply is fully isolated, allowing the amplifier inputs to operate over the full range of the excitation voltage. This feature offers significant flexibility in real world applications. Ten full scale input ranges are provided, from ±1V to ±10V, producing ±5V full scale output.

The input signal is processed through a pre-amplifier on the field side of the isolation barrier. This pre-amplifier has a gain-bandwidth product of 5MHz and is bandwidth limited to 1kHz. After amplification, the input signal is chopped by a proprietary chopper circuit. Isolation is provided by transformer coupling, again using a proprietary technique to suppress transmission of common mode spikes or surges. The module is powered from +5VDC, ±5%.

Special input circuits on the SCM5B43 module provide protection of the signal inputs and the isolated excitation supply up to 240VAC.

Features

- Interfaces to DC Displacement Transducers and Other Devices Requiring a Stable DC Supply
- High-Level Voltage Outputs
- 1500Vrms Transformer Isolation
- ANSI/IEEE C37.90.1 Transient Protection
- Input Protected to 240VAC Continuous
- Fully Isolated Excitation Supply
- 100dB CMR
- 1kHz Signal Bandwidth
- ±0.03% Accuracy
- ±0.005% Linearity
- ±20µV/°C Drift
- CSA C/US Certified
- CE and ATEX Compliant
- Mix and Match SCM5B Types on Backpanel

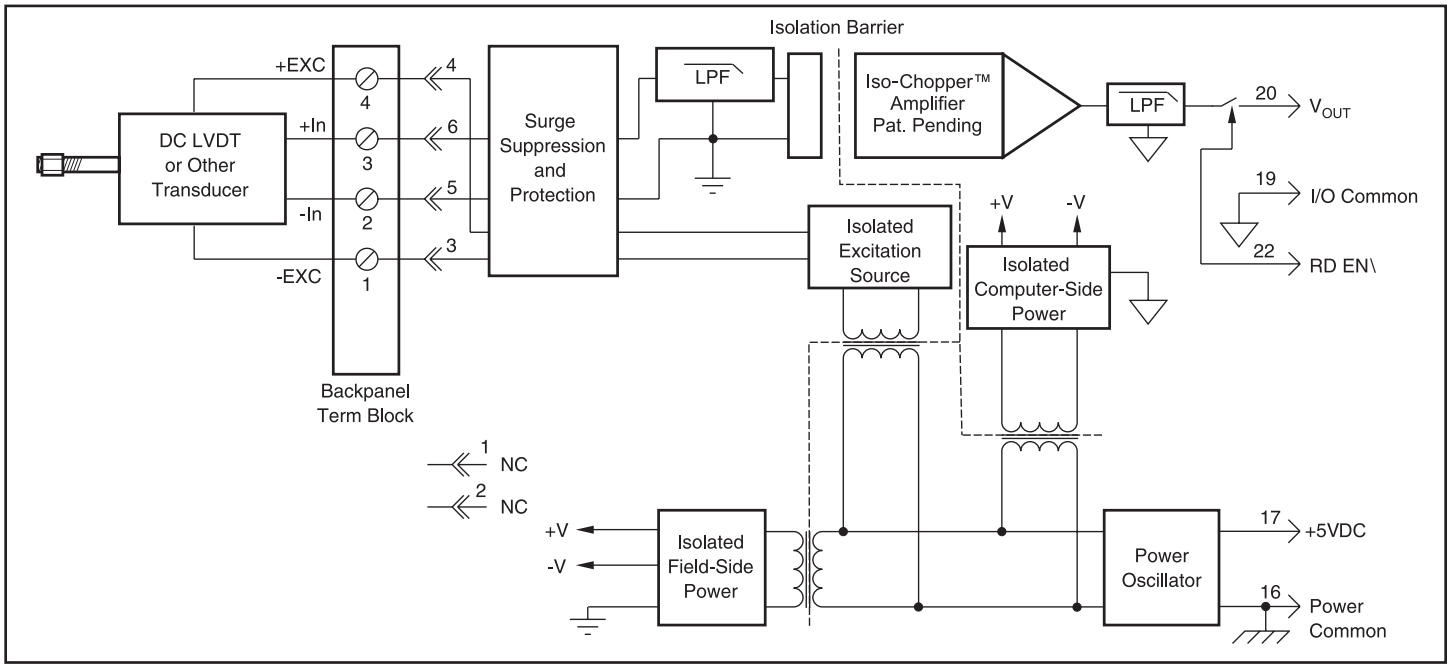

Figure 1: SCM5B43 Block Diagram

©1995-2017 Dataforth Corporation, All Rights Reserved ISO9001:2008-Registered QMS

Specifications

Typical* at T_A = +25°C and +5VDC power

Module	SCM5B43
Input Range	±1V to ±10V
Input Bias Current	±0.05nA
Input Resistance	
Normal	2MΩ (minimum)
Power Off	2MΩ (minimum)
Overload	2MΩ (minimum)
Input Protection	
Continuous	240Vrms max
Transient	ANSI/IEEE C37.90.1 (formerly IEEE-472)
Excitation Voltage, V_{EXC}	+10.0VDC ±2mV
Excitation Current	40mA (maximum)
Excitation Load Regulation	±5ppm/mA
Excitation Stability	±15ppm/°C
Isolated Excitation Protection	
Continuous	240Vrms max
Transient	ANSI/IEEE C37.90.1 (formerly IEEE-472)
CMV, Input to Output	
Continuous	1500Vrms max
Transient	ANSI/IEEE C37.90.1 (formerly IEEE-472)
CMR (50 or 60Hz)	100dB
NMR (–3dB at 1kHz)	120dB per Decade above 1kHz
Accuracy(1)	±0.03% Span
Linearity	±0.005% Span
Stability	
Input Offset	±20µV/°C
Output Offset	±40µV/°C
Gain	±50ppm/°C
Noise	
Input, 0.1 to 10Hz	0.4µVrms
Output, 100kHz	5mVp-p
Bandwidth, –3dB	1kHz
Response Time (to 90% final value)	750µs
Output Range	See Ordering Information
Output Resistance	50Ω
Output Protection	Continuous Short to Ground
Output Selection Time (to ±1mV of V_{OUT})	6.0µs at C_{load} = 0 to 2000pF
Output Current Limit	±8mA
Output Enable Control	
Max Logic "0"	+0.8V
Min Logic "1"	+2.4V
Max Logic "1"	+36V
Input Current "0,1"	0.5µA
Power Supply Voltage	+5VDC ±5%
Power Supply Current	200mA at Full Exc. Load, 100mA at No Exc. Load
Power Supply Sensitivity	±200µV/% RTI(2)
Mechanical Dimensions (h)(w)(d)	2.28" x 2.26" x 0.60" (58mm x 57mm x 15mm)
Environmental	
Operating Temp. Range	–40°C to +85°C
Storage Temp. Range	–40°C to +85°C
Relative Humidity	0 to 95% Noncondensing
Emissions EN61000-6-4	ISM, Group 1
Radiated, Conducted	Class A
Immunity EN61000-6-2	ISM, Group 1
RF	Performance A ±0.5% Span Error
ESD,EFT	Performance B

Ordering Information

Model	Maximum Input	Output Range†
SCM5B43-01	±1V	1, 2
SCM5B43-02	±2V	1, 2
SCM5B43-03	±3V	1, 2
SCM5B43-04	±4V	1, 2
SCM5B43-05	±5V	1, 2
SCM5B43-06	±6V	1, 2
SCM5B43-07	±7V	1, 2
SCM5B43-08	±8V	1, 2
SCM5B43-09	±9V	1, 2
SCM5B43-10	±10V	1, 2

†Output Ranges Available

Output Range	Part No. Suffix	Example
1. –5V to +5V	NONE	SCM5B43-01
2. –10V to +10V	D	SCM5B43-01D

NOTES:
*Contact factory or your local Dataforth sales office for maximum values.
(1) Includes excitation error, linearity, hysteresis and repeatability.
(2) RTI = Referenced to input.

©1995-2017 Dataforth Corporation, All Rights Reserved ISO9001:2008-Registered QMS

SCM5B45

Frequency Input Modules

Description

Each SCM5B45 frequency input module provides a single channel of frequency input which is isolated and converted to a high-level analog voltage output (Figure 1). This voltage output is logic switch controlled, which allows these modules to share a common analog bus without the requirement of external multiplexers.

The frequency input signal can be a TTL level signal or a zero-crossing signal. Terminal 3 on the field-side terminal block is the "common" or ground connection for input signals. A TTL signal is connected from terminal 2 to terminal 3, while a zero-crossing signal is connected from terminal 4 to terminal 3. Input circuitry for each of the signal types has hysteresis built in. An input signal must cross entirely through the hysteresis region in order to trigger the threshold comparator.

A 5.1V excitation is available for use with magnetic pick-up or contact-closure type sensors. The excitation is available on pin 1 and the excitation common is pin 3.

The SCM5B modules are designed with a completely isolated computer side circuit which can be floated to ±50V from Power Common, pin 16. This complete isolation means that no connection is required between I/O Common and Power Common for proper operation of the output switch. If desired, the output switch can be turned on continuously by simply connecting pin 22, the Read-Enable pin, to I/O Common, pin 19.

A special circuit in the input stage of the module provides protection against accidental connection of power-line voltages up to 240VAC.

Features

- Accepts Frequency Inputs of 0 to 100kHz
- Provides High-Level Voltage Outputs
- TTL or Zero Crossing Signal Inputs
- 1500 Vrms Transformer Isolation
- ANSI/IEEE C37.90.1 Transient Protection
- Input Protected to 240VAC Continuous
- 120dB CMR
- ±0.05% Accuracy
- CSA C/US Certified
- CE and ATEX Compliant
- Mix and Match SCM5B Types on Backpanel

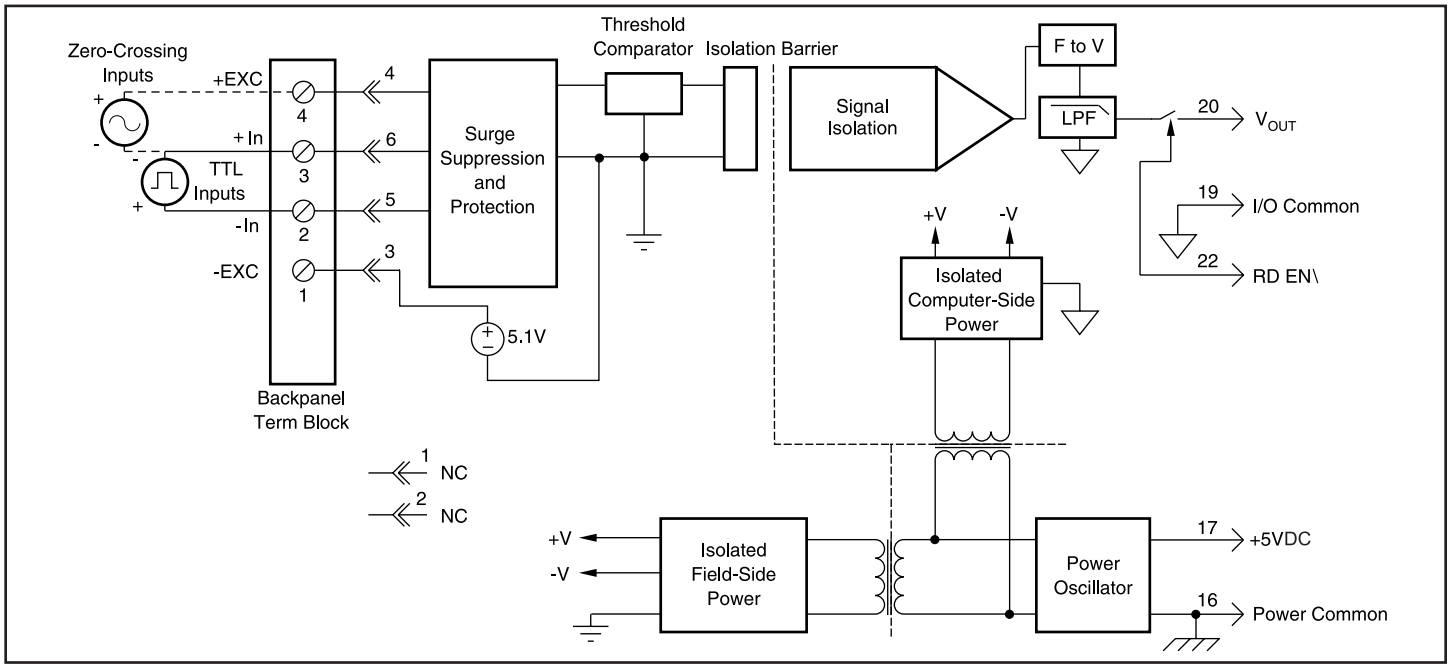

Figure 1: SCM5B45 Block Diagram

©1995-2017 Dataforth Corporation, All Rights Reserved ISO9001:2008-Registered QMS

Specifications

Typical* at T_A = +25°C and +5VDC power

Module	SCM5B45
Input Range	0Hz to 100kHz
Input Threshold	Zero Crossing
Minimum Input	60mVp-p
Maximum Input	350Vp-p
Minimum Pulse Width	4µs
TTL Input Low	0.8V max
TTL Input High	2.4V min
Input Hysteresis	
Zero Crossing	±20mV (±400mV on -2x models)
TTL	1.5V
Input Resistance	
Normal	100kΩ
Power Off	100kΩ
Overload	100kΩ
Input Protection	
Continuous	240Vrms max
Transient	ANSI/IEEE C37.90.1
Excitation	+5.1V at 8mA max
CMV, Input to Output	
Continuous	1500Vrms max
Transient	ANSI/IEEE C37.90.1
CMR (50 or 60Hz)	120dB
Accuracy(1)	±0.05% Span
Linearity	±0.02% Span
Stability	
Offset	±8ppm/°C
Gain	±40ppm/°C
Noise	
Output Ripple	<10mVp-p at Input >2% span
Response Time (0 to 90%)	
SCM5B45-01, -02, -21, -22	300ms
SCM5B45-03, -23	170ms
SCM5B45-04, -05, -24, -25	90ms
SCM5B45-06, -07, -08, -26, -27, -28	20ms
Output Range	See Ordering Information
Output Resistance	50Ω
Output Protection	Continuous Short to Ground
Output Selection Time (to ±1mV of V_{OUT})	6µs at C_{load} = 0 to 2000pF
Output Current Limit	+8mA
Output Enable Control	
Max Logic "0"	+0.8V
Min Logic "1"	+2.4V
Max Logic "1"	+36V
Input Current "0,1"	0.5µA
Power Supply Voltage	+5VDC ±5%
Power Supply Current	110mA
Power Supply Sensitivity	±150µV/% RTO(2)
Mechanical Dimensions (h)(w)(d)	2.28" x 2.26" x 0.60" (58mm x 57mm x 15mm)
Environmental	
Operating Temperature Range	–40°C to +85°C
Storage Temperature Range	–40°C to +85°C
Relative Humidity	0 to 95% Noncondensing
Emissions EN61000-6-4	ISM, Group 1
Radiated, Conducted	Class A
Immunity EN61000-6-2	ISM, Group 1
RF	Performance A ±0.5% Span Error
ESD,EFT	Performance B

NOTES:
*Contact factory or your local Dataforth sales office for maximum values.
(1) Includes linearity, hysteresis and repeatability.
(2) RTO = Referenced to output.

Ordering Information

Model	Input Range	Output Range†	Zero Crossing Hysteresis
SCM5B45-01	0Hz to 500Hz	3, 4	±20mV
SCM5B45-02	0Hz to 1kHz	3, 4	±20mV
SCM5B45-03	0Hz to 3kHz	3, 4	±20mV
SCM5B45-04	0Hz to 5kHz	3, 4	±20mV
SCM5B45-05	0Hz to 10kHz	3, 4	±20mV
SCM5B45-06	0Hz to 25kHz	3, 4	±20mV
SCM5B45-07	0Hz to 50kHz	3, 4	±20mV
SCM5B45-08	0Hz to 100kHz	3, 4	±20mV
SCM5B45-21	0Hz to 500Hz	3, 4	±400mV
SCM5B45-22	0Hz to 1kHz	3, 4	±400mV
SCM5B45-23	0Hz to 3kHz	3, 4	±400mV
SCM5B45-24	0Hz to 5kHz	3, 4	±400mV
SCM5B45-25	0Hz to 10kHz	3, 4	±400mV
SCM5B45-26	0Hz to 25kHz	3, 4	±400mV
SCM5B45-27	0Hz to 50kHz	3, 4	±400mV
SCM5B45-28	0Hz to 100kHz	3, 4	±400mV

†Output Ranges Available

Output Range	Part No. Suffix	Example
3. 0V to +5V	NONE	SCM5B45-01
4. 0V to +10V	D	SCM5B45-01D

©1995-2017 Dataforth Corporation, All Rights Reserved ISO9001:2008-Registered QMS

SCM5B47

Linearized Thermocouple Input Modules

Description

Each SCM5B47 thermocouple input module provides a single channel of thermocouple input which is filtered, isolated, amplified, linearized and converted to a high-level analog voltage output (Figure 1). This voltage output is logic-switch controlled, allowing these modules to share a common analog bus without the requirement of external multiplexers.

The SCM5B modules are designed with a completely isolated computer side circuit which can be floated to ±50V from Power Common, pin 16. This complete isolation means that no connection is required between I/O Common and Power Common for proper operation of the output switch. If desired, the output switch can be turned on continuously by simply connecting pin 22, the Read-Enable pin, to I/O Common, pin 19.

The SCM5B47 can interface to eight industry standard thermocouple types: J, K, T, E, R, S, N, and B. Its corresponding output signal operates over a 0V to +5V range. Each module is cold-junction compensated to correct for parasitic thermocouples formed by the thermocouple wire and screw terminals on the mounting backpanel. Upscale open thermocouple detect is provided by an internal pull-up resistor. Downscale indication can be implemented by installing an external 47MΩ resistor, ±20% tolerance, between screw terminals 1 and 3 on the SCMPB01/02/03/04/05/06/07 backpanels.

Signal filtering is accomplished with a six-pole filter which provides 95dB of normal-mode rejection at 60Hz and 90dB at 50Hz. Two poles of this filter are on the field side of the isolation barrier, and the other four are on the computer side.

After the initial field-side filtering, the input signal is chopped by a proprietary chopper circuit. Isolation is provided by transformer coupling, again using a proprietary technique to suppress transmission of common mode spikes or surges. The module is powered from +5VDC, ±5%.

Features

- Interfaces to Types J, K, T, E, R, S, N and B Thermocouples
- Linearizes Thermocouple Signal
- High-Level Voltage Outputs
- 1500Vrms Transformer Isolation
- ANSI/IEEE C37.90.1 Transient Protection
- Input Protected to 240VAC Continuous
- 160dB CMR
- 95dB NMR at 60Hz, 90dB at 50Hz
- ±1µV/°C Drift
- CSA C/US Certified
- CE and ATEX Compliant
- Mix and Match SCM5B Types on Backpanel

A special input circuit on the SCM5B47 modules provides protection against accidental connection of power-line voltages up to 240VAC.

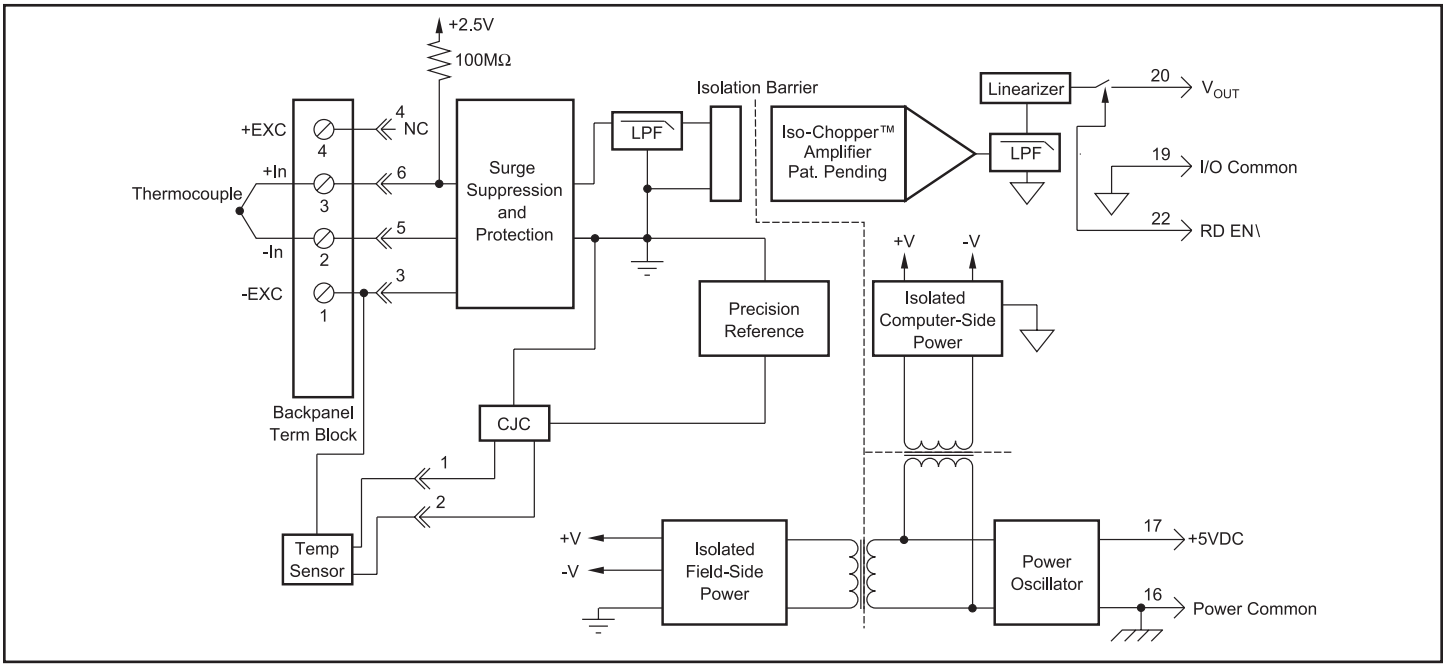

Figure 1: SCM5B47 Block Diagram

©1995-2017 Dataforth Corporation, All Rights Reserved ISO9001:2008-Registered QMS

Specifications

Typical* at T_A = +25°C and +5VDC power

Module	SCM5B47
Input Range	–0.1V to +0.5V
Input Bias Current	–25nA
Input Resistance	
Normal	50MΩ
Power Off	40kΩ
Overload	40kΩ
Input Protection	
Continuous	240Vrms max
Transient	ANSI/IEEE C37.90.1
CMV, Input to Output	
Continuous	1500Vrms max
Transient	ANSI/IEEE C37.90.1
CMR (50Hz or 60Hz)	160dB
NMR	95dB at 60Hz, 90dB at 50Hz
Accuracy	See Ordering Information
Stability	
Input Offset	±1µV/°C(2)
Output Offset	±20µV/°C
Gain	±25ppm/°C
Noise	
Input, 0.1 to 10Hz	0.2µVrms
Output, 100kHz	300µVp-p, 150µVrms
Bandwidth, –3dB	4Hz
Response Time, 90% Span	0.2s
Output Range	See Ordering Information
Output Resistance	50Ω
Output Protection	Continuous Short to Ground
Output Selection Time (to ±1mV of V_{OUT})	6µs at C_{load} = 0 to 2000pF
Output Current Limit	+8mA
Output Enable Control	
Max Logic "0"	+0.8V
Min Logic "1"	+2.4V
Max Logic "1"	+36V
Input Current "0,1"	0.5µA
Open Input Response	Upscale
Open Input Detection Time	<10s
Cold Junction Compensation	
Accuracy, 25°C	±0.25°C
Accuracy, +5°C to +45°C	±0.5°C
Accuracy, –40°C to +85°C	±1.25°C
Power Supply Voltage	+5VDC ±5%
Power Supply Current	30mA
Power Supply Sensitivity	±2µV/% RTI(3)
Mechanical Dimensions (h)(w)(d)	2.28" x 2.26" x 0.6" (58mm x 57mm x 15mm)
Environmental	
Operating Temperature Range	–40°C to +85°C
Storage Temperature Range	–40°C to +85°C
Relative Humidity	0 to 95% Noncondensing
Emissions EN61000-6-4	ISM, Group 1
Radiated, Conducted	Class A
Immunity EN61000-6-2	ISM, Group 1
RF	Performance A ±0.5% Span Error
ESD, EFT	Performance B

NOTES:
*Contact factory or your local Dataforth sales office for maximum values.
(1) Includes conformity, hysteresis and repeatability. Does not include CJC accuracy.
(2) This is equivalent to °C as follows: Type J 0.020 °C/°C, Types K, T 0.025°C/°C, Type E 0.016°C/°C, Types R, S 0.168°C/°C, Type N 0.037°C/°C, Type C 0.072°C/°C.
(3) RTI = Referenced to input.

Ordering Information

Model	TC Type‡	Input Range	Output Range†	Accuracy(1)	
SCM5B47J-01	J	0°C to +760°C (+32°F to +1400°F)	3, 4	±0.08%	±0.61°C
SCM5B47J-02	J	–100°C to +300°C (–148°F to +572°F)	3, 4	±0.08%	±0.32°C
SCM5B47J-03	J	0°C to +500°C (+32°F to 932°F)	3, 4	±0.07%	±0.36°C
SCM5B47K-04	K	0°C to +1000°C (+32°F to +1832°F)	3, 4	±0.08%	±0.80°C
SCM5B47K-05	K	0°C to +500°C (+32°F to +932°F)	3, 4	±0.08%	±0.38°C
SCM5B47T-06	T	–100°C to +400°C (–148°F to +752°F)	3, 4	±0.16%	±0.80°C
SCM5B47T-07	T	0°C to +200°C (+32°F to +392°F)	3, 4	±0.16%	±0.32°C
SCM5B47E-08	E	0°C to +1000°C (+32°F to +1832°F)	3, 4	±0.10%	±1.0°C
SCM5B47R-09	R	+500°C to +1750°C (+932°F to +3182°F)	3, 4	±0.10%	±1.3°C
SCM5B47S-10	S	+500°C to +1750°C (+932°F to +3182°F)	3, 4	±0.10%	±1.3°C
SCM5B47B-11	B	+500°C to +1800°C (+932°F to +3272°F)	3, 4	±0.15%	±2.0°C
SCM5B47J-12	J	–100°C to +760°C (–148°F to +1400°F)	3, 4	±0.08%	±0.70°C
SCM5B47K-13	K	–100°C to +1350°C (–148°F to +2462°F)	3, 4	±0.10%	±1.5°C
SCM5B47K-14	K	0°C to +1200°C (+32°F to +2192°F)	3, 4	±0.08%	±0.96°C
SCM5B47N-15	N	–100°C to +1300°C (–148°F to +2372°F)	3, 4	±0.08%	±1.15°C

‡Thermocouple Alloy Combinations

Standards: DIN IEC 584, ANSI MC96-1-82, JIS C 1602-1981

Type	Material
J	Iron vs. Copper-Nickel
K	Nickel-Chromium vs. Nickel-Aluminum
T	Copper vs. Copper-Nickel
E	Nickel-Chromium vs. Copper-Nickel
R	Platinum-13% Rhodium vs. Platinum
S	Platinum-10% Rhodium vs. Platinum
B	Platinum-30% Rhodium vs. Platinum-6% Rhodium
N	Nickel-14.2% Chromium-1.4% Silicon vs. Nickel-4.4% Silicon- 0.1% Magnesium

†Output Ranges Available

Output Range	Part No. Suffix	Example
3. 0V to +5V	NONE	SCM5B47J-01
4. 0V to +10V	D	SCM5B47J-01D

©1995-2017 Dataforth Corporation, All Rights Reserved ISO9001:2008-Registered QMS

SCM5B48

Accelerometer Input Module

Description

The SCM5B48 provides excitation to piezoelectric sensors with built-in microelectronic amplifiers, commonly known as ICP®* or IEPE* or LIVM* sensors. The module provides a constant current excitation to the sensor, then isolates, filters, and amplifies the sensor output, yielding a high-level analog voltage output (Figure 1). The excitation current, signal gain, and filter high-pass and low-pass cutoff frequencies are field-configurable through a set of slide switches.

Six poles of signal filtering in the SCM5B48 module result in greater than 100dB of normal-mode rejection for signal frequencies above the cutoff frequency. One pole of filtering is on the field side of the isolation barrier for anti-aliasing purposes and the remaining five-pole programmable Bessel filter is located on the system side. High-pass filtering is achieved through a second order passive filter, located on the field side. If desired, the output switch can be turned on continuously by simply connecting pin 22, the Read-Enable pin, to I/O Common, pin 19.

The SCM5B48 offers the option of setting the constant current source for sensor excitation to common values of 4mA or 9mA with a compliance voltage of 24VDC. Programmable gains of 1, 10 and 100 are selectable and the module offers a ±10V output. The required supply level is +5VDC, ±5%.

To ensure protection of expensive data acquisition equipment, the SCM5B48 module signal inputs and sensor excitation outputs are protected against accidental connection of voltages up to 240Vrms.

*ICP is a registered trademark of PCB Group Inc.
*IEPE is Integrated Electronic Piezo-Electric
*LIVM is Low Impedance Voltage Mode

Features

- Interfaces to ICP®* or IEPE* or LIVM* Sensors
- ±5V or ±10V Output Range
- 1500Vrms Transformer Isolation
- ANSI/IEEE C37.90.1 Transient Protection
- Input Protection to 240Vrms Continuous
- 1, 10, and 100 Programmable Gain
- 2.5, 5, 10, and 20kHz Programmable LP Filter
- 0.2 and 10Hz Programmable HP Filter
- 4mA or 9mA Programmable Current Excitation
- 100dB CMR
- ±0.2% Accuracy
- ±0.01% Linearity
- Low Drift with Ambient Temperature
- –40°C to +85°C Operating Temperature Range
- CSA C/US Certified
- CE Compliant
- ATEX Compliance Pending
- Mix and Match SCM5B Types on Backpanel

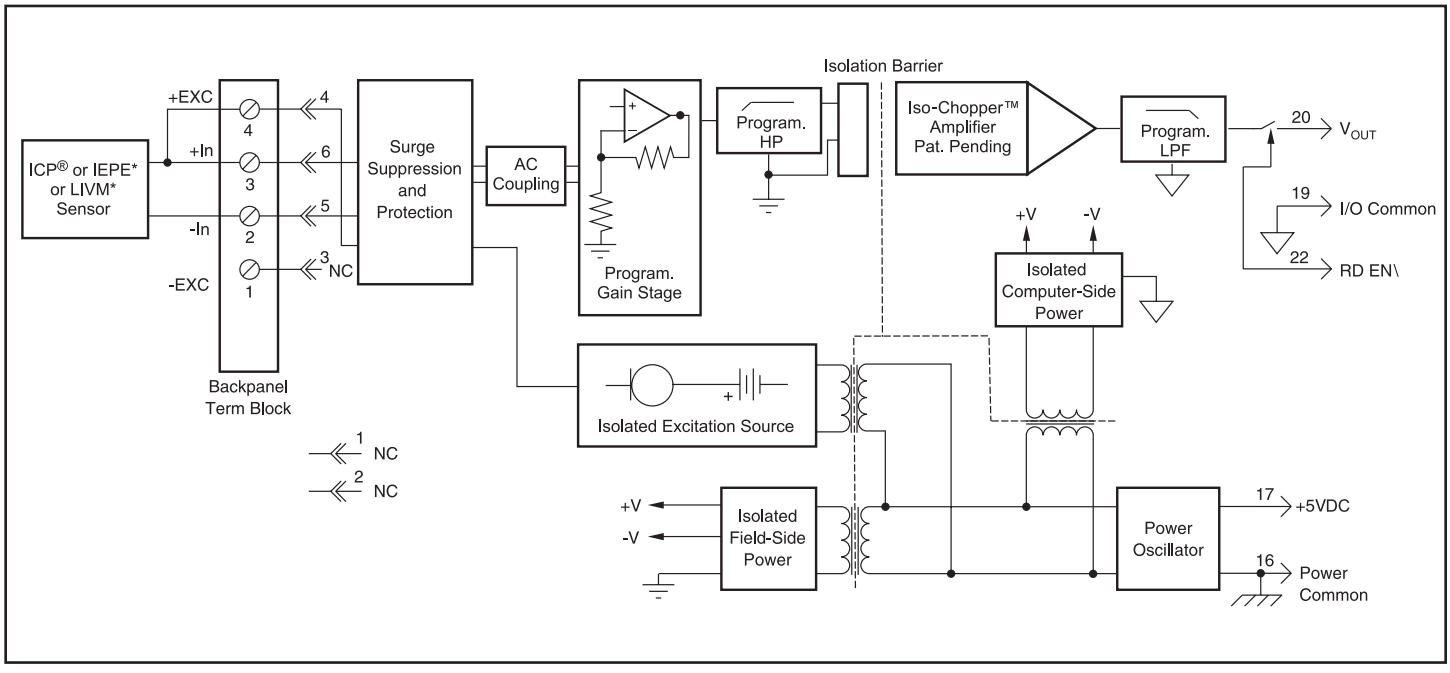

Figure 1: SCM5B48 Block Diagram

©1995-2017 Dataforth Corporation, All Rights Reserved ISO9001:2008-Registered QMS

Specifications

Typical* at T_A = +25°C and +5VDC power

Module	SCM5B48
Input Type	Accelerometer
Range(1)	±10V
Protection	
Continuous	240Vrms max
Transient	ANSI/IEEE C37.90.1
Excitation	
Constant Current(2)	4mA or 9mA, ±10%
Compliance Voltage	24V ±10%
Protection	
Continuous	240Vrms max
Transient	ANSI/IEEE C37.90.1
Output Range	See Ordering Information
Resistance	50Ω
Protection	Continuous Short to Ground
Gain	
Programmable(2)	1, 10, 100
CMR (50/60Hz)	100dB
Accuracy(3)	±0.2% Span
Linearity	±0.01% Span
Stability	
Offset	±25ppm/°C
Gain	±100ppm/°C
Output Noise, Gain=1, BW=20kHz	200µVrms
Low Pass Filter	
Type	Bessel
Programmable(2)	2.5kHz, 5kHz, 10kHz, 20kHz
High Pass Filter	
Programmable(2)	DC, 0.2Hz, 10Hz
CMV (Input to Output)	
Continuous	1500Vrms max
Transient	ANSI/IEEE C37.90.1
NMR	100db per Decade above cutoff frequency
Power Supply Voltage	+5VDC ±5%
Power Supply Current	110mA typical (9mA excitation) 70mA typical (4mA excitation)
Power Supply Sensitivity	±600µV/% RTI (4)
Mechanical Dimensions (h)(w)(d)	2.28" x 2.26" x 0.6" (58mm x 57mm x 15mm)
Environmental	
Operating Temperature Range	–40°C to +85°C
Storage Temperature Range	–40°C to +85°C

NOTES:
*Contact factory or your local Dataforth sales office for maximum values.
(1) AC peak for AC coupling. For DC coupling input range (AC + DC): 0 to +10V.
(2) Programmable using slide switches on the bottom of the module.
(3) Includes linearity, repeatability and hysteresis.
(4) RTI = Referenced to input.

Ordering Information

Model	Input Range(1)	Output Range	Bandwidth
SCM5B48-01	–10V to +10V	–10V to +10V	2.5kHz to 20kHz(2)
SCM5B48-02	–10V to +10V	–5V to +5V	2.5kHz to 20kHz(2)

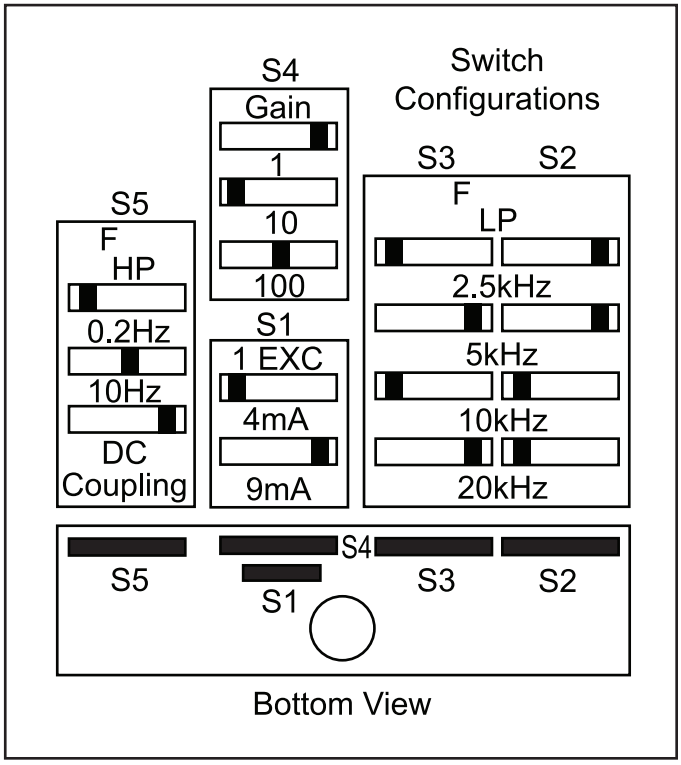

Figure 2: SCM5B48 Side Label

©1995-2017 Dataforth Corporation, All Rights Reserved ISO9001:2008-Registered QMS

SCM5B49

Voltage Output Modules

Description

Each SCM5B49 voltage output module provides a single channel of analog output. The track-and-hold circuit in the input stage can be operated in a hold mode where one DAC can supply many output modules, or a track mode where one DAC is dedicated to each module. In addition to the track-and-hold circuit, each module provides signal buffering, isolation, filtering, and conversion to a high-level voltage output (Figure 1).

Setting of the track or hold mode is controlled by the logic state of WR EN\, module pin 23. When pin 23 is low, the track mode is enabled. If pin 23 is high, the hold mode is enabled. The module is designed with a completely isolated computer side circuit which can be floated to ±50V from Power Common, pin 16. This complete isolation means that no connection is required between I/O Common and Power Common for proper operation of the track and hold circuit. For a low state, simply connect pin 23, the Write-Enable pin, to I/O Common, pin 19.

The SCMPB02 and SCMPB06 backpanels allow host computer control of the WR EN\ control line, which allows multiplexing of one host DAC to up to 64 SCM5B49 output modules.

Features

- Accepts High-Level Voltage Inputs to ±10V
- Provides High-Level Voltage Outputs to ±10V
- 1500 Vrms Transformer Isolation
- ANSI/IEEE C37.90.1 Transient Protection
- 5 Poles of Filtering
- 110dB CMR
- 400Hz Signal Bandwidth
- ±0.03% Accuracy
- ±0.015% Linearity
- CSA C/US Certified
- CE and ATEX Compliant
- Mix and Match SCM5B Types on Backpanel

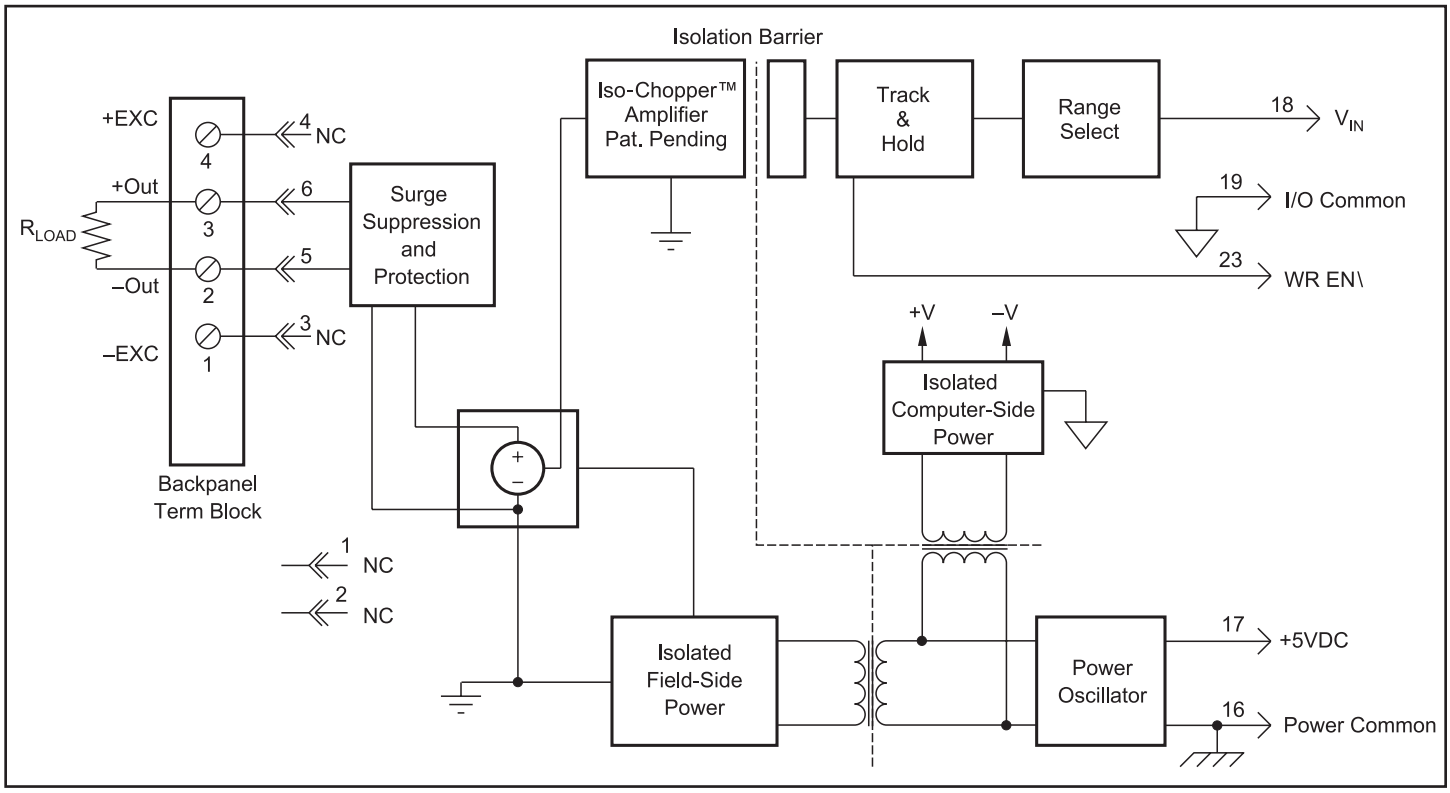

Figure 1: SCM5B49 Block Diagram

©1995-2017 Dataforth Corporation, All Rights Reserved ISO9001:2008-Registered QMS

Specifications

Typical* at T_A = +25°C and +5VDC power

Module	SCM5B49
Input Voltage Range	±5V, 0 to +5V, ±10V, 0 to +10V
Input Voltage Maximum	±36V (no damage)
Input Resistance	50MΩ
Output Voltage Range	±5V, 0 to +5V, ±10V, 0 to +10V
Over Range Capability	5% at 10V output
Output Drive	50mA max
Output Resistance	0.5Ω
Output I Under Fault, Max	75mA
Output Protection	
Continuous	240Vrms max
Transient	ANSI/IEEE C37.90.1
CMV, Output to Input	
Continuous	1500Vrms max
Transient	ANSI/IEEE C37.90.1
CMR (50 or 60Hz)	110dB
NMR (–3dB at 400Hz)	80dB per Decade above 400Hz
Accuracy(1)	±0.03% Span (0-5mA Load)
Linearity	±0.015% Span
Stability	
Zero	±25ppm/°C
Span	±20ppm/°C
Noise	
Output Ripple, 100kHz bandwidth	2mVp-p
Bandwidth, –3dB	400Hz
Response Time, 90% Span	1.25ms
Sample and Hold	
Output Droop Rate	0.2% Span/s
Acquisition Time	50µs
Track-and-Hold Enable Control	
Max Logic "0"	+0.8V
Min Logic "1"	+2.4V
Max Logic "1"	+36V
Input Current "0"	0.5µA
Power Supply Voltage	+5VDC ±5%
Power Supply Current	350mA Full Load, 135mA no load
Power Supply Sensitivity	±12.5ppm/%
Mechanical Dimensions (h)(w)(d)	2.28" x 2.26" x 0.60" (58mm x 57mm x 15mm)
Environmental	
Operating Temperature Range	–40°C to +85°C
Storage Temperature Range	–40°C to +85°C
Relative Humidity	0 to 95% Noncondensing
Emissions EN61000-6-4	ISM, Group 1
Radiated, Conducted	Class A
Immunity EN61000-6-2	ISM, Group 1
RF	Performance A ±0.5% Span Error
ESD, EFT	Performance B

NOTES:
*Contact factory or your local Dataforth sales office for maximum values.
(1) Includes linearity, hysteresis and repeatability.

Ordering Information

Model	Input Range	Output Range
SCM5B49-01	0V to +5V	–5V to +5V
SCM5B49-02	–5V to +5V	–5V to +5V
SCM5B49-03	–5V to +5V	0V to +5V
SCM5B49-04	0V to +10V	–10V to +10V
SCM5B49-05	–10V to +10V	–10V to +10V
SCM5B49-06	–10V to +10V	0V to +10V
SCM5B49-07	–5V to +5V	–10V to +10V

©1995-2017 Dataforth Corporation, All Rights Reserved ISO9001:2008-Registered QMS

SCM5B

Module Dimensions and Pinouts

The following mechanical drawing is useful if designing circuit boards to mount the SCM5B modules. Many sockets are available which accept the mounting pins. As an example, AMP Inc. provides a socket with part number 50865-5. The captive nut for the 3mm mounting screw can be obtained from PEM (Penn Engineering and Manufacturing), part number KFS2-M3.

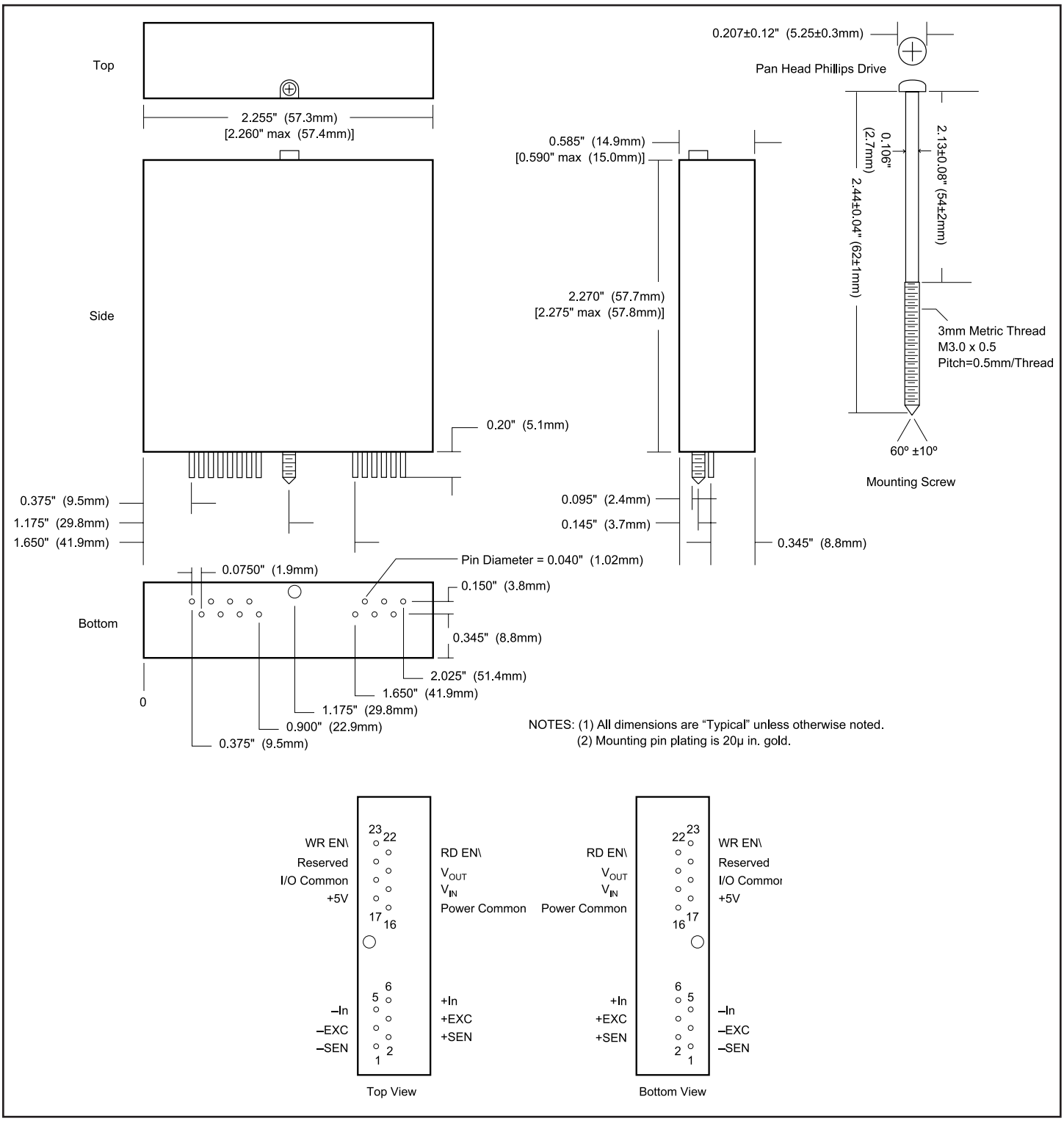

©1995-2017 Dataforth Corporation, All Rights Reserved ISO9001:2008-Registered QMS

SCMVAS

Voltage Attenuator System

Description

The SCMVAS (Signal Conditioning Modular Voltage Attenuator System) is an analog signal conditioning system designed to safely monitor and accurately measure voltage potentials up to 495VAC (1400V peak-to-peak). These highlevel voltages are typically found in industrial applications such as induction heaters or electric-motor drive controllers. The system reduces the input signal to a level suitable for interface to data acquisition systems, while at the same time providing various filter characteristics and 1500Vrms isolation (Figure 1).

For each channel of analog input, an attenuator module, SCMVAS-Mnnn, pre-conditions the signal which is then filtered, isolated, and converted to a high-level voltage output using an SCM5B30-07 or SCM5B40-07 module. The SCM5B40-07 module with a 10kHz bandwidth is recommended for common 50/ 60Hz signals low in harmonics where the user is interested in measuring only AC voltage. The SCM5B30-07 module is used for low frequency AC signals below 4Hz. The attenuator and signal conditioning modules have excellent stability over time and do not require recalibration. Overall system accuracy is ±0.06%.

Input signal connections to the SCMVAS-Mnnn attenuator module are made using a pluggable terminal block for ease of system assembly and reconfiguration. For safety purposes, the terminal block has a cover over the screws and there are no other exposed high-voltage points on the SCMVAS-Mnnn series modules, SCM5B30-07 or SCM5B40-07 module, or the mounting backpanel.

The SCMVAS system has two specially designed backpanels for mounting the attenuator and signal conditioning modules. The SCMVAS-PB8 high density, 8- channel backpanel (Figures 2, 3) can be panel mounted or DIN rail mounted and provides the conditioned output signal on screw terminal blocks. Jumpers are provided on each channel to optionally connect or isolate each module's I/O Common from other channel's I/O Common and/or Power Common. The SCMVAS-PB16 (Figures 4, 5) has 16 channels of analog I/O simultaneously available to high-speed data acquisition (ADC) boards through a 26-conductor ribbon cable. Refer to the SCMPB01 Data Sheet in this catalog and Application Note AN502 at www.dataforth.com for recommended ground connections and host system interfaces. Both the SCMVAS-PB8 and SCMVAS-PB16 backpanels can be mounted on the SCMXRK-002 19-inch metal rack.

Features

- Accepts High Voltage Signals up to 495VAC (1400V Peak-to-Peak)
- 5 or 10 Volt Output for A/D Systems
- 1500Vrms Transformer Isolation
- True 3-Way Isolation
- Up to 160dB CMR
- ±0.06% Accuracy
- Panel or DIN Rail Mounting Options
- CSA Certified
- CE Compliant
- ATEX Compliant (all models except SCMVAS-M400, -M500, -M600, -M650)

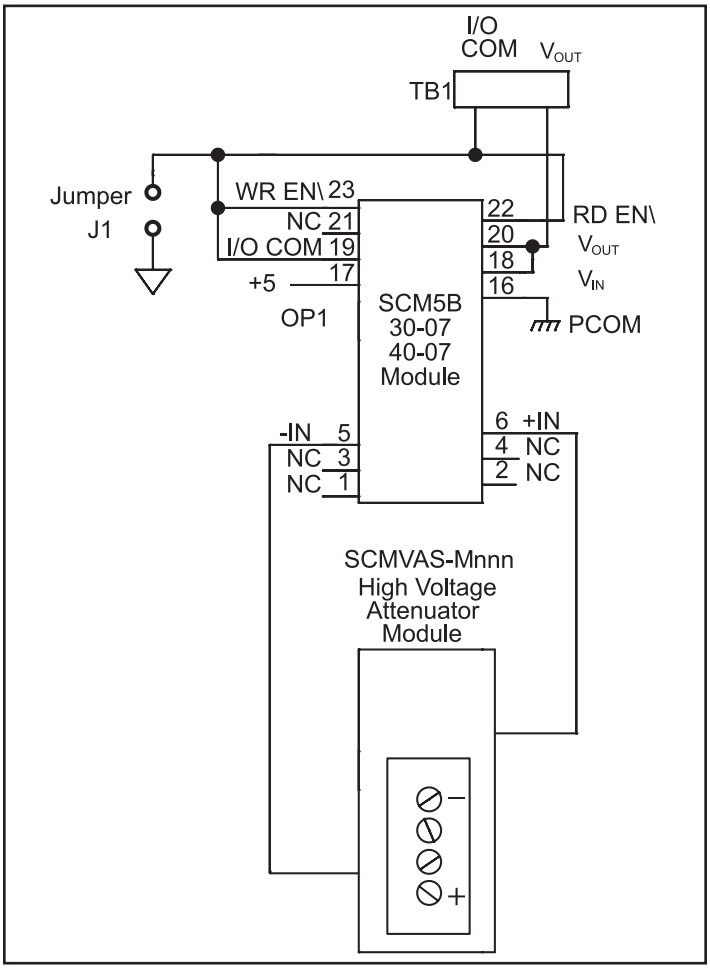

Figure 1: SCMVAS Schematic

©1995-2017 Dataforth Corporation, All Rights Reserved ISO9001:2008-Registered QMS

SCM5B30/40-07

Isolated Analog Voltage Input Modules

Specifications

Typical* at T_A = +25°C and +5VDC power

Module	SCM5B30-07	SCM5B40-07
Input Range	–1.0V to +1.0V	*
Input Bias Current	±0.5nA	*
Input Resistance		
Normal	50MΩ	200MΩ
Power Off	40kΩ	*
Overload	40kΩ	*
Input Protection		
Continuous	240Vrms max	*
Transient	ANSI/IEEE C37.90.1	*
CMV, Input to Output		
Continuous	1500Vrms max	*
Transient	ANSI/IEEE C37.90.1	*
CMR (50 or 60Hz)	160dB	100dB
NMR	95dB at 50Hz, 90dB at 60Hz	120dB per Decade above 10kHz
Accuracy(1)	±0.03% Span	*
Linearity	±0.005% Span	±0.01% Span
Stability		
Input Offset	±20µV/°C	*
Output Offset	±20µV/°C	*
Gain	±50ppm/°C	*
Noise		
Input, DC to 10Hz	2µVrms	*
Output, 100kHz	200µVrms	2mVp-p
Bandwidth, -3dB	4Hz	10kHz
Response Time (to 90% final value)	0.2s	35µ s
Output Range	–5V to +5V (–10V to +10V, D model versions)	*
Output Resistance	50Ω	*
Output Protection	Continuous Short to Ground	*
Output Selection Time (to ±1mV of V_{OUT})	6.0µS at C_{load} = 0 to 2000pF	*
Output Current Limit	±8mA	*
Output Enable Control		
Max Logic "0"	+0.8V	*
Min Logic "1"	+2.4V	*
Max Logic "1"	+36V	*
Input Current "0,1"	0.5µA	*
Power Supply Voltage	+5VDC ±5%	*
Power Supply Current	30mA	*
Power Supply Sensitivity	±200µ V/% RTI(2)	*
Mechanical Dimensions (h)(w)(d)	2.28"x 2.26"x 0.60" (58mm x 57mm x 15mm)	*
Environmental		
Operating Temp. Range	–40°C to +85°C	*
Storage Temp. Range	–40°C to +85°C	*
Relative Humidity	0 to 95% Noncondensing	*
Emissions EN61000-6-4	ISM, Group 1	*
Radiated, Conducted	Class A	*
Immunity EN61000-6-2	ISM, Group 1	*
RF	Performance A ±0.5% Span Error	*
ESD,EFT	Performance B	*

Ordering Information

Model	Description
SCM5B30-07	V Isolation Module, ±5V Output, 4Hz Bandwidth
SCM5B40-07	V Isolation Module, ±5V Output, 10kHz Bandwidth
SCM5B30-07D	V Isolation Module, ±10V Output, 4Hz Bandwidth
SCM5B40-07D	V Isolation Module, ±10V Output, 10kHz Bandwidth

NOTES:
*Contact factory or your local Dataforth sales office for maximum values.
(1) Includes linearity, hysteresis and repeatability.
(2) RTI = Referenced to input.

©1995-2017 Dataforth Corporation, All Rights Reserved ISO9001:2008-Registered QMS

SCMVAS-Mnnn

High Voltage Attenuator Modules

Specifications

Typical* at T_A = +25°C

Module	SCMVAS-Mnnn
Input Range Input Voltage Maximum Input Resistance	±100Vpeak to ±700Vpeak (70VAC to 495VAC) ±750Vpeak 10MΩ
Accuracy Stability	±0.03% ±50ppm/°C
Output Range Output Resistance	±1V <100kΩ
Mechanical Dimensions (h)(w)(d)	1.70"x 1.98"x 0.69" (44mm x 51mm x 18mm)
Environmental Operating Temp. Range Storage Temp. Range Relative Humidity HazLoc CSA ATEX	 –40°C to +85°C –40°C to +85°C 0 to 95% Noncondensing All models except SCMVAS-M700 All models except SCMVAS-M400, -M500, -M600, -M650, -M700

*Contact factory or your local Dataforth sales office for maximum values.

Ordering Information

Model	Description	Input Range with V Isolation Module
SCMVAS-M100	Attenuator Module	±100V Input (70VAC)
SCMVAS-M200	Attenuator Module	±200V Input (141VAC)
SCMVAS-M300	Attenuator Module	±300V Input (212VAC)
SCMVAS-M400	Attenuator Module	±400V Input (282VAC)
SCMVAS-M500	Attenuator Module	±500V Input (353VAC)
SCMVAS-M600	Attenuator Module	±600V Input (424VAC)
SCMVAS-M650	Attenuator Module	±650V Input (460VAC)
SCMVAS-M700	Attenuator Module	±700V Input (495VAC)
SCMVAS-MPT	Attenuator Module, Pass-Thru 1-to-1	

Accessories

Model	Description
SCMVAS-PB8	Backpanel, 8-Channel
SCMVAS-PB8D	Backpanel, 8-Channel, DIN Rail Mount
SCMVAS-PB16	Backpanel, 16-Channel
SCMVAS-PB16D	Backpanel, 16-Channel, DIN Rail Mount

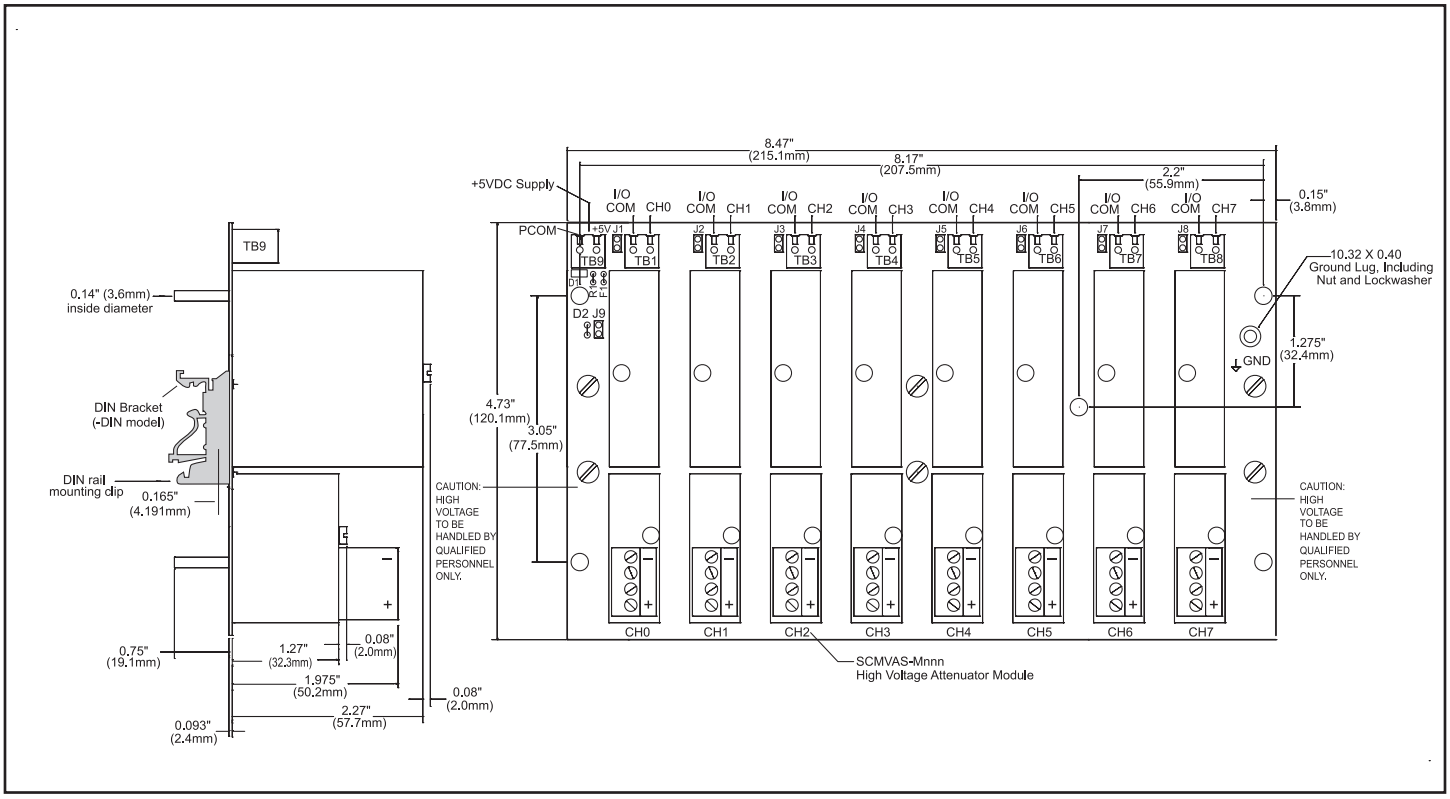

Figure 2: SCMVAS-PB8 Analog I/O Backpanel

©1995-2017 Dataforth Corporation, All Rights Reserved ISO9001:2008-Registered QMS

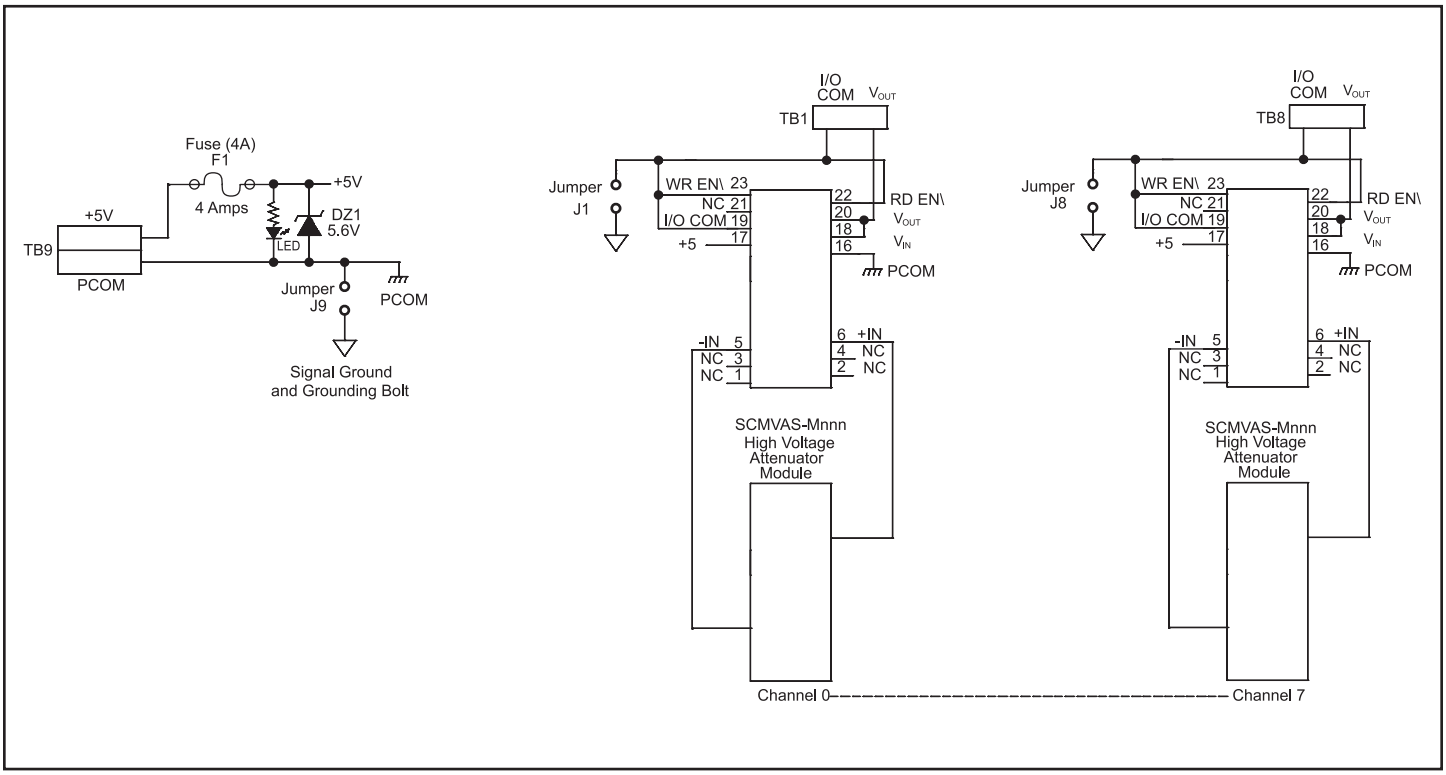

Figure 3: SCMVAS-PB8 Schematic

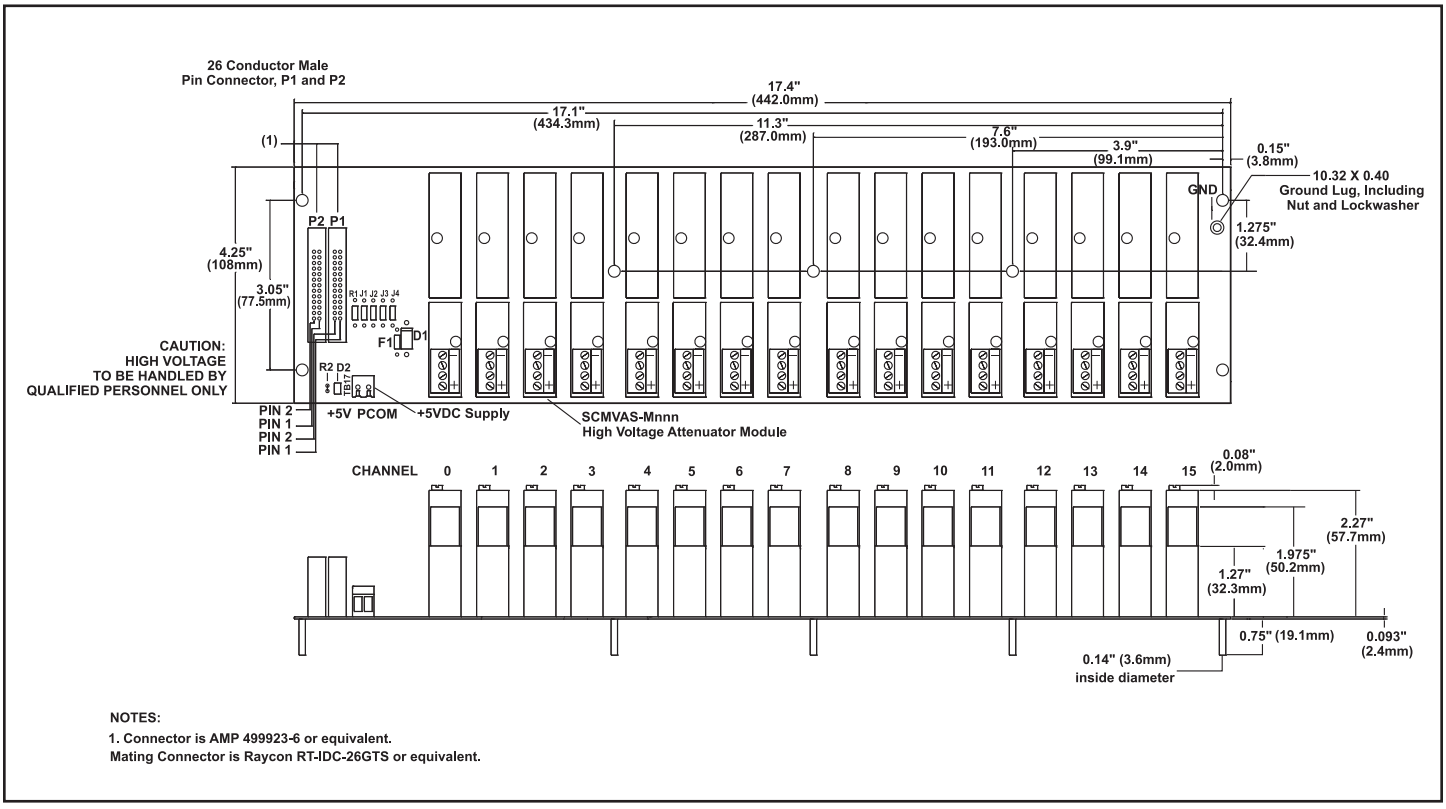

Figure 4: SCMVAS-PB16 Analog I/O Backpanel

©1995-2017 Dataforth Corporation, All Rights Reserved ISO9001:2008-Registered QMS

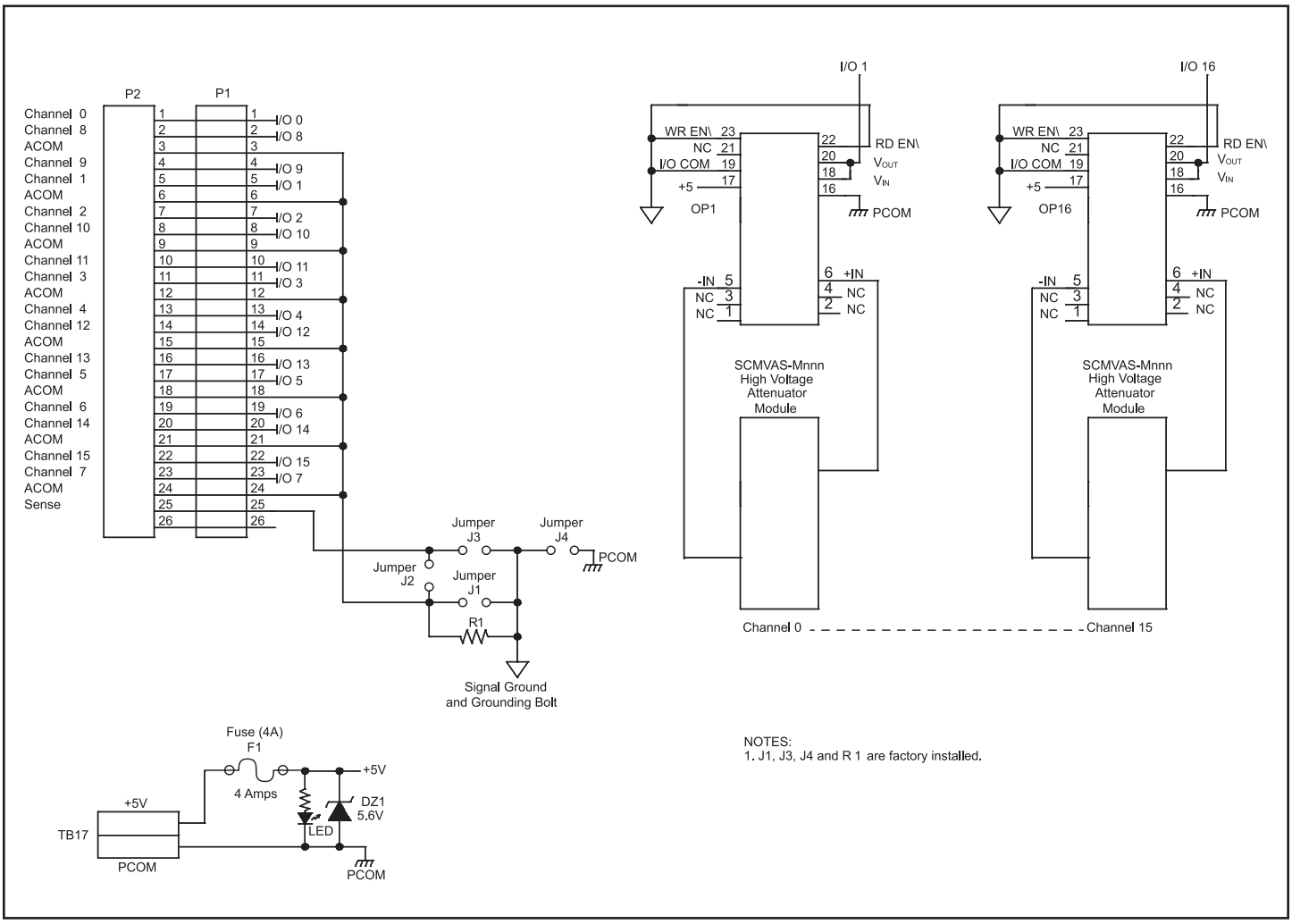

Figure 5: SCMVAS-PB16 Schematic

©1995-2017 Dataforth Corporation, All Rights Reserved ISO9001:2008-Registered QMS

Accessories for SCM5B Analog Modules

Features

- 1-, 2-, 8-, 16-Position Backpanels
- Panel or DIN Rail Mounting Options
- 19-Inch Mounting Rack For Backpanels
- Multiplexed and Non-Multiplexed Backpanels
- Interface Cables
- Module Evaluation Board
- Cable-to-Screw-Terminal Interface Board
- Power Supplies

SCMPB01

16-Position Analog I/O Backpanel, Non-Multiplexed

Description

The SCMPB01 16-channel backpanel (Figure 1) can accept any of the SCM5B analog modules in any mixture. It can be mounted on the SCMXRK-002 19-inch metal rack. The SCMPB01 has 16 non-addressable analog I/O signal channels which provides each module with its own analog bus. The module output switch is continuously "on" when using this backpanel and all sixteen module outputs are simultaneously accessible to high-speed data acquisition (ADC) boards. A set of inter-channel bridge jumpers permits connecting an input module's output to an output module's input, providing two levels of isolation. A temperature sensor is mounted on each channel to provide cold junction compensation for thermocouple input modules (see Figure 2 for schematic). Field connections are terminated with four screw terminals at each module site. Use system interface cable SCMXCA004-XX for connection to the host system.

Specifications

Operating Temperature Relative Humidity	–40°C to +85°C 95% Noncondensing
Interface Connector: Field System	 high density screw clamp, 14 AWG max 26-pin, male header connector
Isolation: Input-to-Output Channel-to-Channel	 1500Vrms continuous, max 1500Vrms continuous, max

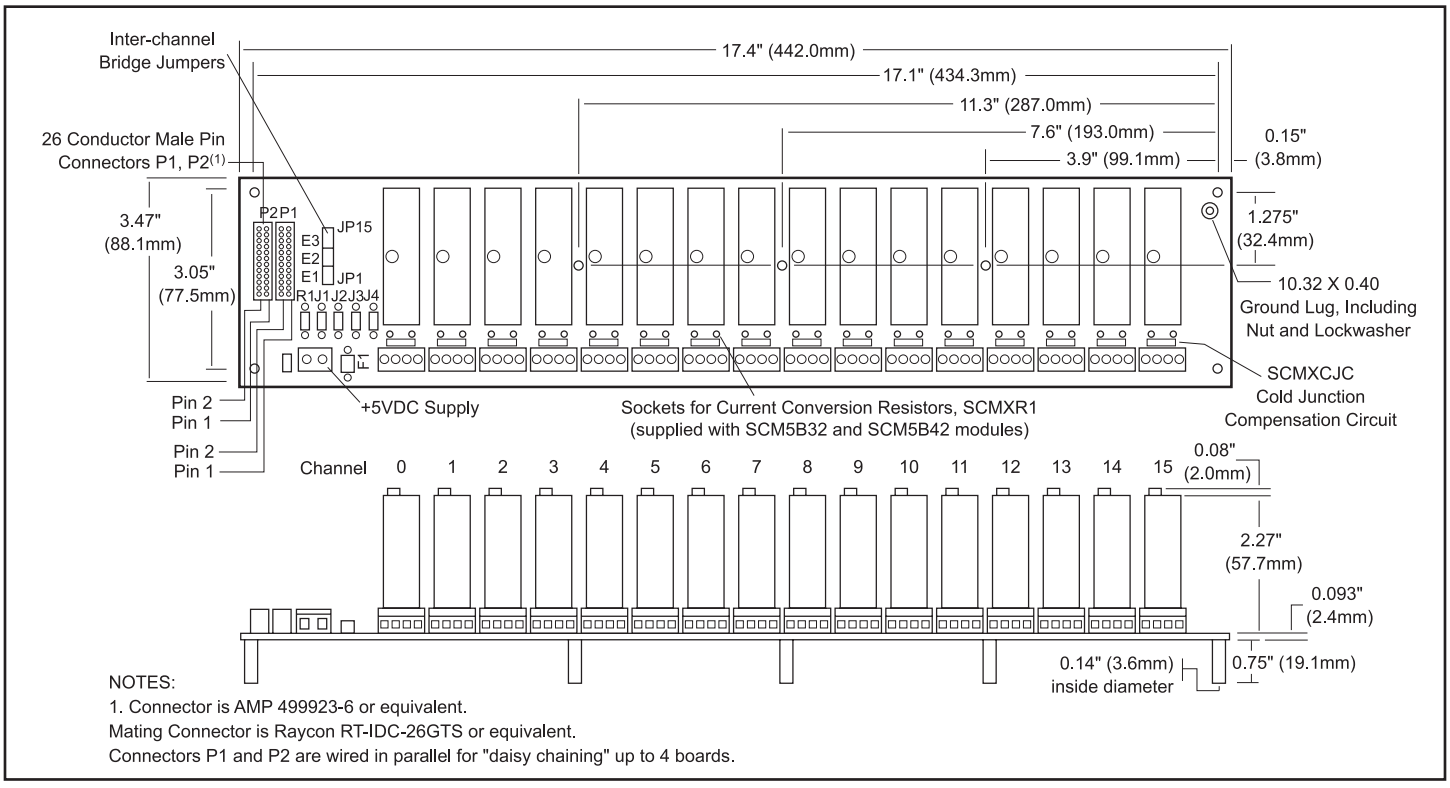

Figure 1: SCMPB01 Analog I/O Backpanel

©1995-2017 Dataforth Corporation, All Rights Reserved ISO9001:2008-Registered QMS

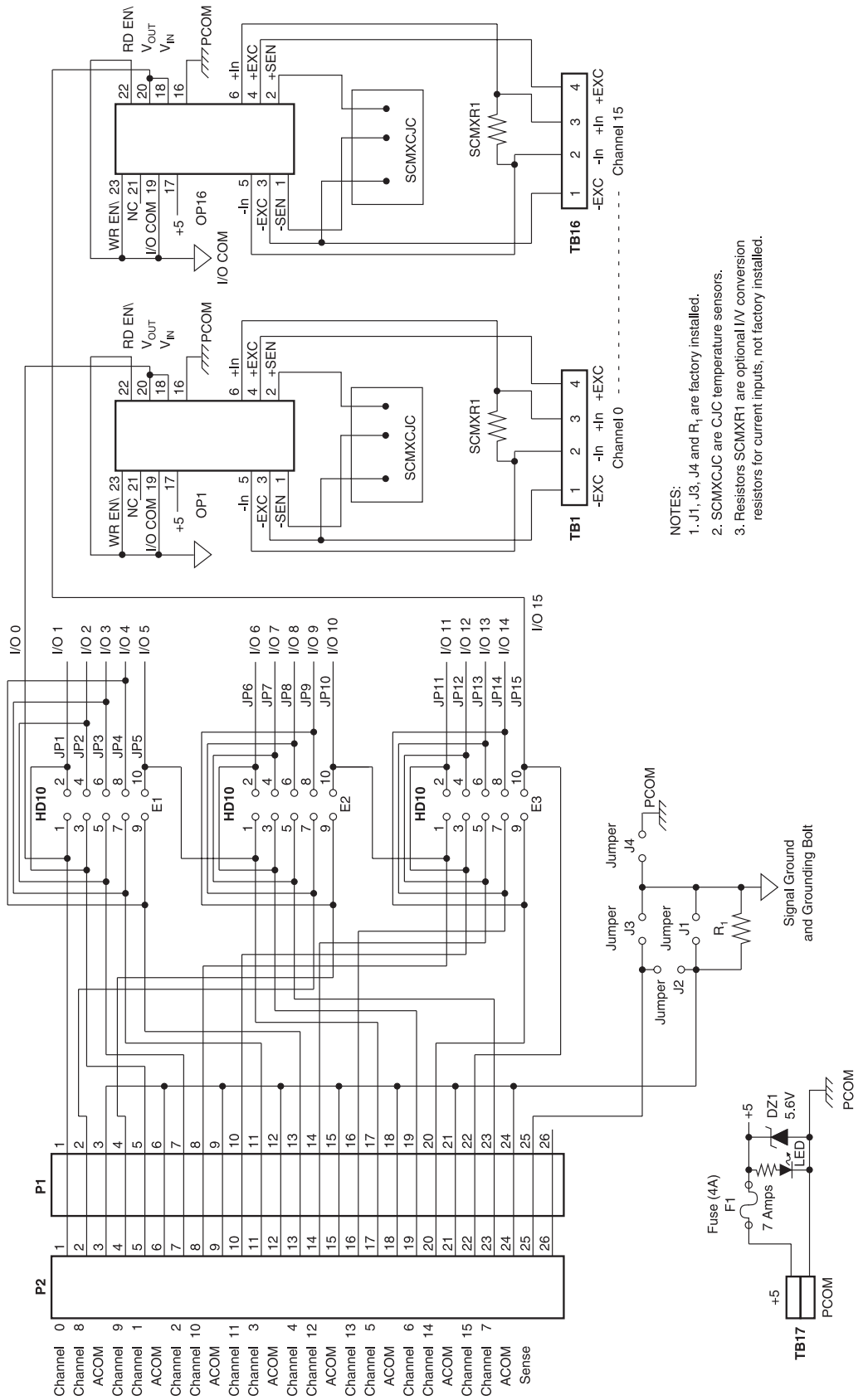

Figure 2: SCMPB01 Schematic

©1995-2017 Dataforth Corporation, All Rights Reserved ISO9001:2008-Registered QMS

Electrical

P1 and P2 Connector

Connection to the host system is made at connectors P1 and P2. These connectors are electrically equivalent. Two connectors are provided to allow both analog input and analog output from host systems having individual input and output connectors.

Adjacent Channel Jumpers

Adjacent channels may be connected together to provide an isolated output signal from an isolated input module, providing two levels of 1500V isolation. This capability is provided with the 15 jumpers labeled JP1 through JP15 on headers E1, E2, and E3. A simplified drawing of the SCMPB01 schematic for Channels 1 through 4 is shown in Figure 3.

Example: Assume an SCM5B30 input module is installed in Channel 0 position and an SCM5B39 output module is installed in Channel 1 position. If JP1 is installed, the output of Channel 0 is connected to the input of Channel 1, which provides two levels of 1500V isolation.

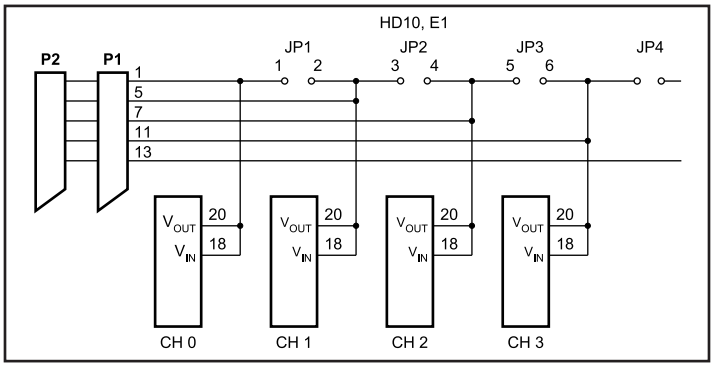

Figure 3: SCMPB01 Adjacent Channel Jumpers

Power

The SCMPB01 backpanel requires external +5VDC ±5% power. The chassis mounted SCMXPRE-003 or SCMXPRT-003 power supplies have adequate capacity to power any combination of modules.

Fusing

The SCMPB01 backpanel power is fuse protected through F1. This is a Littelfuse type 252007, 7 amp fuse. Zener diode DZ1 provides extra protection by clamping the input power voltage to +5.6V. If the input supply voltage connection is reversed, this zener diode will be forward biased and fuse F1 will be blown.

Grounding

Figure 4 details the optional ground jumper configuration available on the SCMPB01 backpanel. Jumpers J1, J3, and J4 are factory installed.

Jumper J1 connects the AGND shield wires (pins 3, 6, 9, 12, 15, 18, 21, and 24) to the backpanel signal ground. This provides a ground connection between the host system and backpanel. Jumper J1 is required if output modules (SCM5B39, SCM5B49) are used, or if there is no high impedance sense input (input low of a differential or pseudo-differential system) on the host measurement system.

Jumper J3 connects the SENSE line (pin 25) to the backpanel signal ground. If the host system has the capability, this allows measuring the SCMPB01 ground potential.

Ordering Information

Part Number	Description
SCMPB01	16-channel backpanel with standoffs for mounting.
SCMPB01-1	16-channel backpanel with standoffs for mounting but without cold junction compensation circuits. Use when cost savings is desired and thermocouple input modules SCM5B37 and SCM5B47 will not be used.
SCMPB01-2	16-channel backpanel with DIN rail mounting option. The backpanel is mounted on a plate which is captured by the SCMXBExx DIN rail mounting elements. Shipped fully assembled.
SCMPB01-3	16-channel backpanel without cold junction compensation circuits and with DIN rail mounting option. Shipped fully assembled.

For proper operation of the output switch or track-and-hold circuit when using the SCMPB01/05 backpanels, a current path must exist between the host control logic power common and module I/O Common (module pin 19). This path can be established on the SCMPB01 via jumper J4. If this connection exists elsewhere in the system, jumper J4 should be removed since possible ground loops could exist. Other connections of power ground and signal ground usually occur at the A/D or D/A converter of the host measurement system. More information on grounding can be found in Application Note AN502.

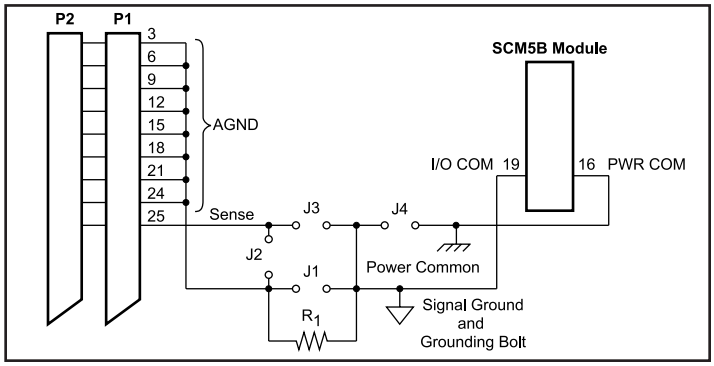

Figure 4: SCMPB01 Grounding Diagram

If the connection of power common and AGND shield wires exists in the host measurement system, an optional resistive connection between AGND and the backpanel signal ground can be made via R_1. R_1 can be as large as 10K ohms; 100 ohms is a recommended value. Jumper J2 can be used to connect the SENSE line to R_1 when this ground configuration is used.

For full protection against large electrical disturbances on the field-side of the SCM5B modules, a #10-32 ground stud is provided on the backpanel. An electrical connection between this ground stud and system ground should be provided with a large gauge wire of the shortest possible length. When this connection is made, a possible ground loop could result through the AGND shield wires and backpanel signal ground. If the application involves only input modules and a differential input is used by the host measurement system, J1 should be removed. Remember that J1 is required if output modules are used or if the host system does not have differential inputs.

©1995-2017 Dataforth Corporation, All Rights Reserved ISO9001:2008-Registered QMS

SCMPB02

16-Position Analog I/O Backpanel, Multiplexed

Description

The SCMPB02 16-channel backpanel (Figure 5) can accept any of the SCM5B analog modules in any mixture. It can be mounted on the SCMXRK-002 19-inch metal rack. The SCMPB02 has two analog buses; one for analog input and one for analog output. This two-bus configuration takes advantage of the switch controlled outputs on the input modules and the track-and-hold inputs on the output modules. A temperature sensor is mounted on each channel to provide cold junction compensation for thermocouple input modules (see Figure 6 for schematic). Field connections are terminated with four screw terminals at each module site. Up to four SCMPB02 backpanels may be daisy-chained.Use SCMXCA004-XX cable for daisy chaining and connecting to host computer.

Specifications

Operating Temperature Relative Humidity	–40°C to +85°C 95% Noncondensing
Interface Connector: Field System	 high density screw clamp, 14 AWG max 26-pin, male header connector
Isolation: Input-to-Output Channel-to-Channel	 1500Vrms continuous, max 1500Vrms continuous, max
Address Input Logic Levels: Max Logic “0” Min Logic “1”	 0.8V 2.0V
I_I Input Current, “0” or “1”	0.1µA max at 25°C 1.0µA max –25°C to +85°C
RD EN\ or WR EN\ Signal Delay from Connector P1 to Channels 1-16 Standalone (address 0-15) Expanded (address 16-63)	 51ns at 25°C 64ns at –25°C to +85°C 100ns at 25°C 126ns at –25°C to +85°C

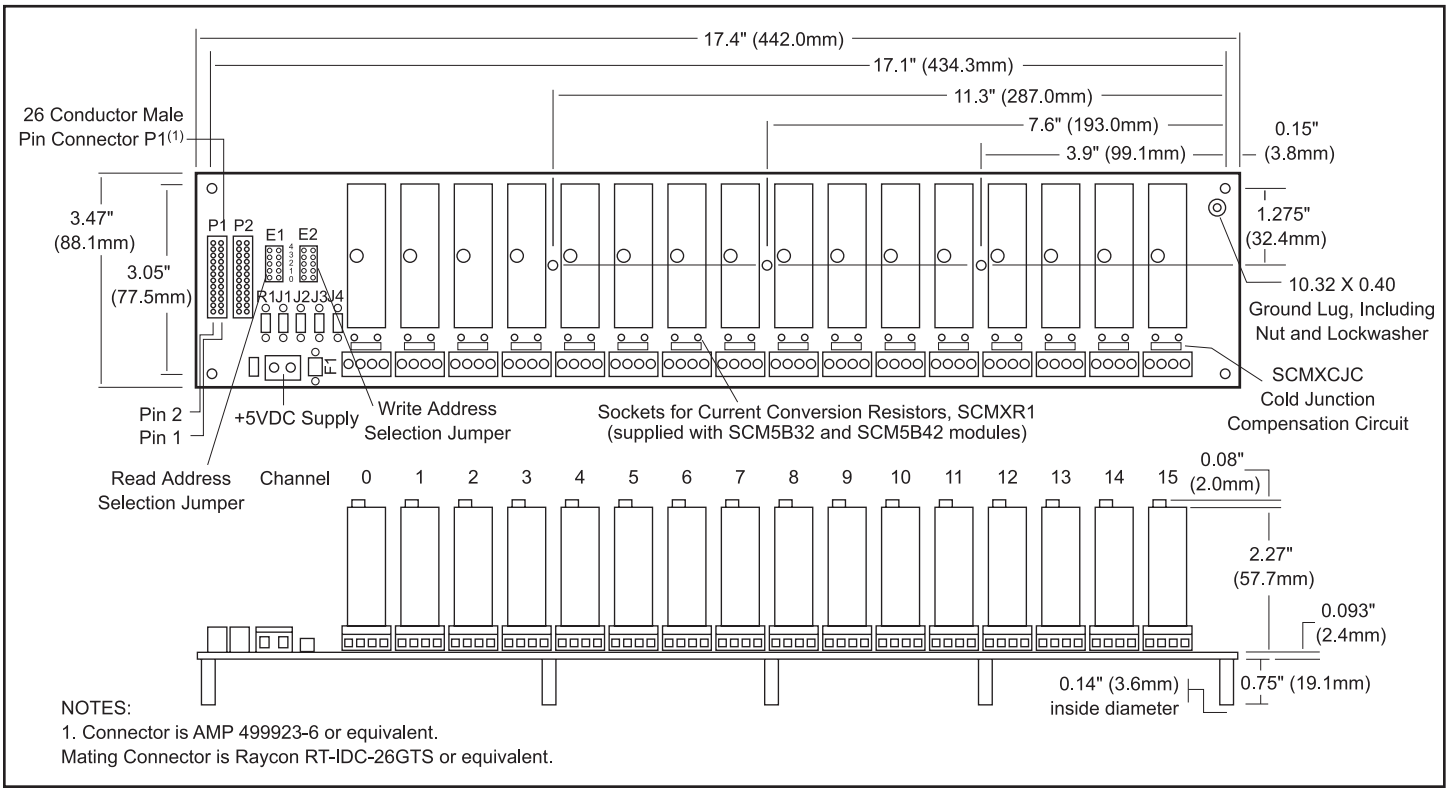

Figure 5: SCMPB02 Analog I/O Backpanel

©1995-2017 Dataforth Corporation, All Rights Reserved ISO9001:2008-Registered QMS

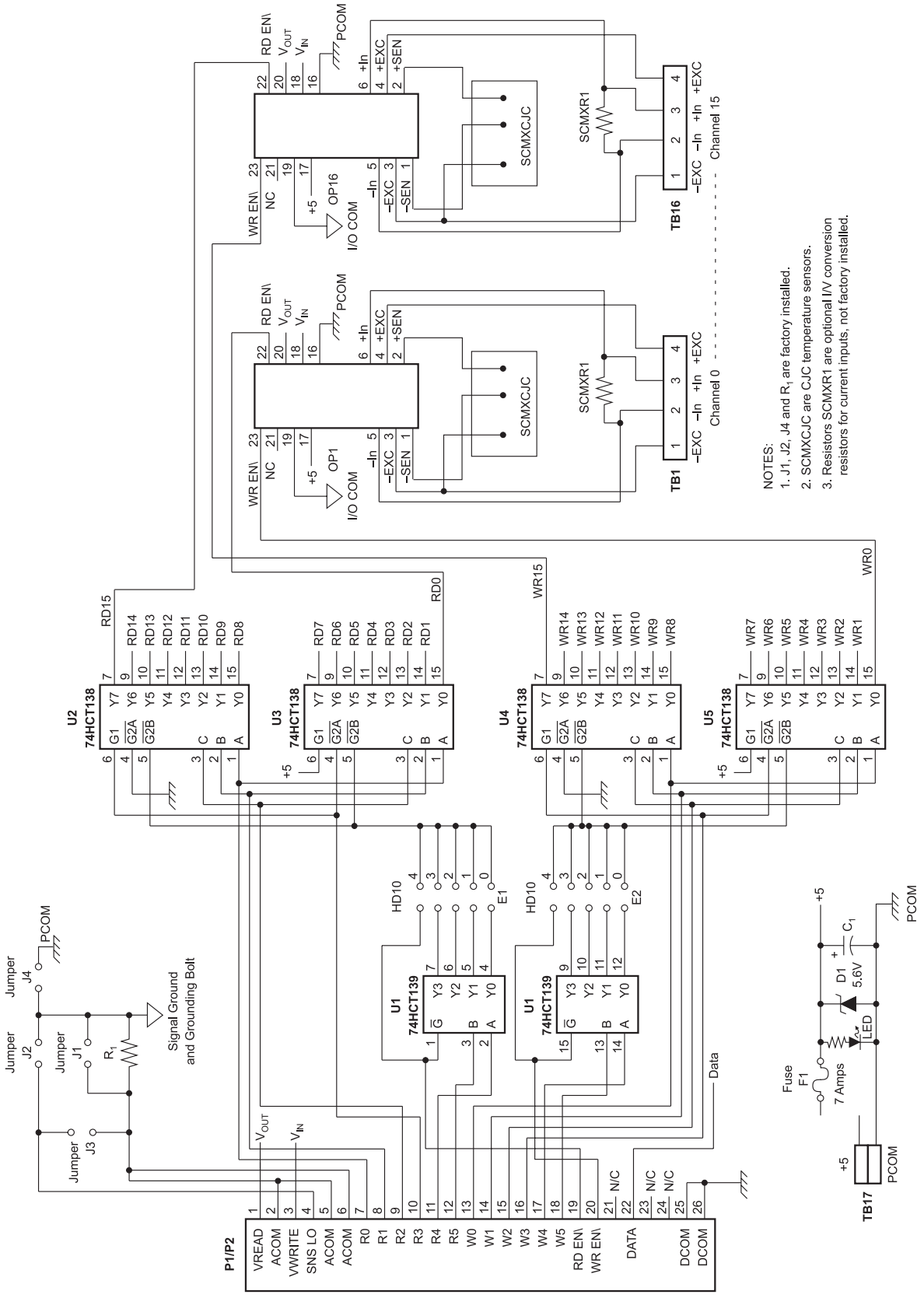

Figure 6: SCMPB02 Schematic

©1995-2017 Dataforth Corporation, All Rights Reserved ISO9001:2008-Registered QMS

Electrical

P1 Connector

The 26 pin P1 and P2 connectors provide the signal interface between the SCMPB02 backpanel and the host measurement system. Two separate analog bus connections are provided; one for analog input signals and one for analog output signals. Two sets of six address lines and an enable pin allow input and output modules to be independently multiplexed onto their respective analog signal bus. R0 thru R5 and RD EN\ are used for input modules, and W0 thru W5 and WR EN\ are used for output modules.

Address Selection

The SCMPB02 backpanel has address decoding circuitry to allow multiplexing any combination of up to 16 input or output modules. Capability is also provided in the address decode circuitry to expand the system to 64 channels (four SCMPB02 backpanels) of multiplexed input or output. Jumpers on HD10 header, E1 and E2 group, select which set of 16 addresses are assigned to a particular backpanel. The E1 group assigns a set of 16 addresses for input modules, and the E2 group assigns a set of 16 addresses for output modules. The table below shows the correlation of jumper position to address range.

E1 Jumper Pos	E2 Jumper Pos	Address Range/Mode
4	4	0-15, STAND ALONE
3	3	48-63, EXPANDED
2	2	32-47, EXPANDED
1	1	16-31, EXPANDED
0	0	0-15, EXPANDED

To connect multiple SCMPB02 backpanels in this expanded configuration, use interconnect cable SCMXCA004-XX.

Modules with system output of ±10V or 0-10V cannot be mixed with modules with system output of ±5V or 0-5V within a given system.

Power

The SCMPB02 backpanel requires external +5VDC ±5% power. The chassis mounted SCMXPRE-003 or SCMXPRT-003 power supplies have adequate capacity to power any combination of modules.

Fusing

The SCMPB02 backpanel power is fuse protected through F1. This is a Littelfuse type 252007, 7 amp fuse. Zener diode DZ1 provides extra protection by clamping the input power voltage to +5.6V. If the input supply voltage connection is reversed, this zener diode will be forward biased and fuse F1 will be blown.

Grounding

Figure 7 below details the optional ground jumper configuration available on the SCMPB02 backpanel. Jumpers J1, J2, and J4 are factory installed.

Jumper J1 connects the SIG COM shield wires (pins 2, 5, and 6) to the backpanel signal ground. This provides a ground connection between the host system and backpanel. Jumper J1 is required if output modules (SCM5B39, SCM5B49) are used, or if there is no high impedance sense input (input low of a differential or pseudo-differential system) on the host measurement system.

Jumper J2 connects the SNS LO line (pin 4) to the backpanel signal ground. If the host system has the capability, this allows measuring the SCMPB02 ground potential.

Ordering Information

Part Number	Description
SCMPB02	16-channel backpanel with standoffs for mounting.
SCMPB02-1	16-channel backpanel without cold junction compensation circuits and standoffs for mounting. Use when cost savings is desired and thermocouple input modules SCM5B37 and SCM5B47 will not be used.
SCMPB02-2	16-channel backpanel with DIN rail mounting option. The backpanel is mounted on a plate which is captured by the SCMXBExx DIN rail mounting elements. Shipped fully assembled.
SCMPB02-3	16-channel backpanel without cold junction compensation circuits and with DIN rail mounting option. Shipped fully assembled.

For proper operation of the output switch or track-and-hold circuit when using the SCMPB02/06 backpanels, a current path must exist between the host control logic power common and module I/O Common (module pin 19). This path can be established on the SCMPB02 via jumper J4. If this connection exists elsewhere in the system, jumper J4 should be removed since possible ground loops could exist. Other connections of power ground and signal ground usually occur at the A/D or D/A converter of the host measurement system. More information on grounding can be found in Application Note AN502.

If the connection of power common and SIG COM shield wires exists in the host measurement system, a resistive connection between SIG COM and the backpanel signal ground can be made via R_1. R_1 can be as large as 10K ohms; 100 ohms is a recommended value. Jumper J3 can be used to connect the SNS LO line to R_1 when this ground configuration is used.

For full protection against large electrical disturbances on the field-side of the SCM5B modules, a #10-32 ground stud is provided on the backpanel. An electrical connection between this ground stud and system ground should be provided with a large gauge wire of the shortest possible length. When this connection is made, a possible ground loop could result through the SIG COM shield wires and backpanel signal ground. If the application involves only input modules and a differential input is used by the host measurement system, J1 should be removed. Remember that J1 is required if output modules are used or if the host system does not have differential inputs.

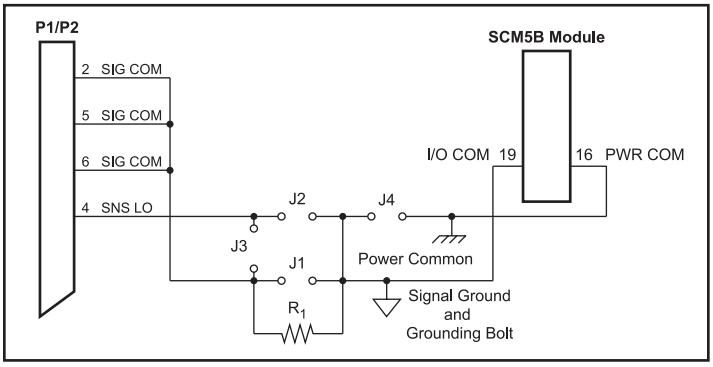

Figure 7: SCMPB02 Grounding Diagram

©1995-2017 Dataforth Corporation, All Rights Reserved ISO9001:2008-Registered QMS

SCMPB03/SCMPB04

One/Two Position Analog I/O Backpanels

Description

The SCMPB03 and SCMPB04 are single and dual channel mounting panels for the SCM5B modules. Both are intended for DIN rail mounting.

See Figures 9 and 10 for wiring diagrams, Figure 11 for schematic.

The following accessories are required for mounting one SCMPB03/04 panel (Figure 8):

Qty	Model	Description
1	SCMXBEFE	Base element with snap foot
2	SCMXSE	Side element

The following accessories are required for mounting two or more SCMPB03/04 panels:

Qty	Model	Description
2	SCMXBEFE	Base element with snap foot
2	SCMXSE	Side element
(# panels)-2	SCMXBE	Base element without snap foot
(4 x (# panels))-4	SCMXVS	Connection pins

The following DIN rail styles are available. Specify length in meters (-XX)

SCMXRAIL1-XX	DIN EN 50022-35x7.5 (slotted steel)
SCMXRAIL2-XX	DIN EN 50035-G32 (slotted steel)
SCMXRAIL3-XX	DIN EN 50022-35x15 (slotted steel)

Specifications

Operating Temperature Relative Humidity	–40°C to +85°C 95% Noncondensing
Interface Connector: Field System	 high density screw clamp, 14 AWG max high density screw clamp, 14 AWG max
Isolation: Input-to-Output Channel-to-Channel	 1500Vrms continuous, max 1500Vrms continuous, max

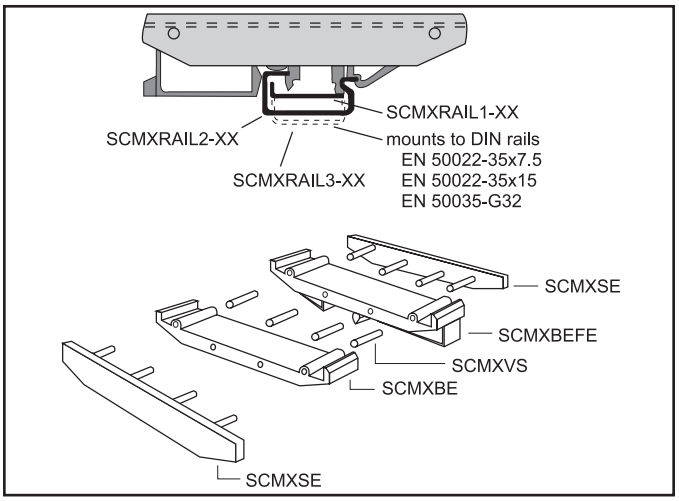

Figure 8: DIN Rail Mounting Elements

Ordering Information

Part Number	Description
SCMPB03	Single channel backpanel. No mounting hardware included.
SCMPB03-2	Single channel backpanel with DIN rail mounting hardware. Shipped fully assembled.
SCMPB04	Dual channel backpanel. No mounting hardware included.
SCMPB04-1	Dual channel backpanel without cold junction compensation circuits. Use when cost savings is desired and thermocouple input modules SCM5B37 and SCMPB47 will not be used. No mounting hardware included.
SCMPB04-2	Dual channel backpanel with DIN rail mounting hardware. Shipped fully assembled.
SCMPB04-3	Dual channel backpanel without cold junction compensation circuits and with DIN rail mounting hardware. Shipped fully assembled.

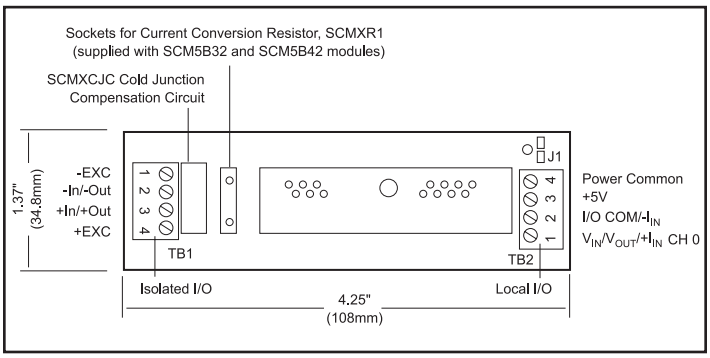

Figure 9: SCMPB03 Analog I/O Backpanel

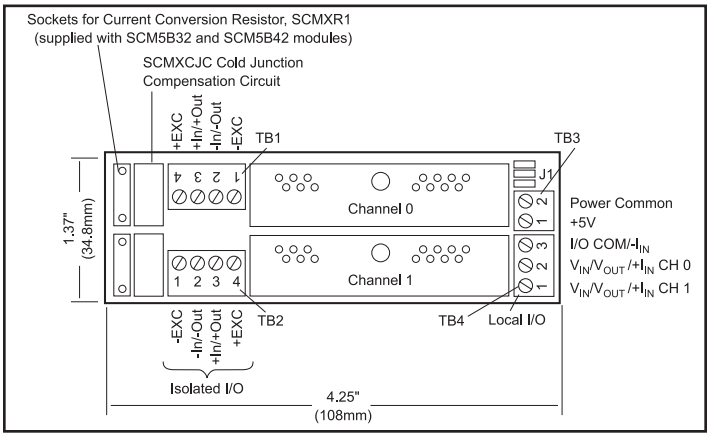

Figure 10: SCMPB04 Analog I/O Backpanel

©1995-2017 Dataforth Corporation, All Rights Reserved ISO9001:2008-Registered QMS

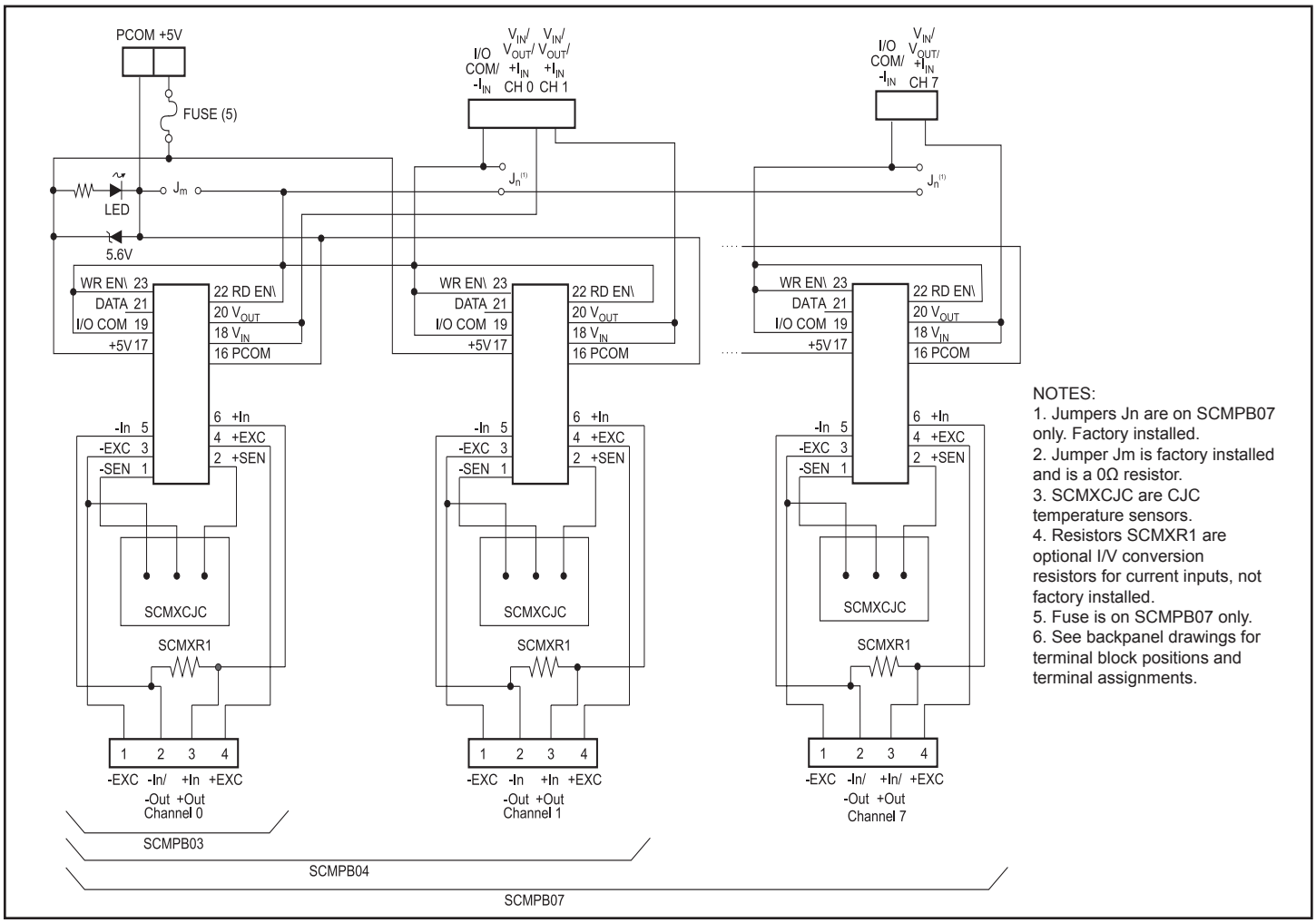

Figure 11: SCMPB03/SCMPB04/SCMPB07 Schematic

©1995-2017 Dataforth Corporation, All Rights Reserved ISO9001:2008-Registered QMS

SCMPB05

8-Position Analog I/O Backpanel, Non-Multiplexed

Description

The SCMPB05 backpanel (Figure 12) can accept up to eight SCM5B analog input and/or output modules in any combination. It can be mounted on the SCMXRK-002 19-inch metal rack. A separate analog signal path is provided for each channel and each channel's signal is accessible at redundant 26-pin connectors. The module output switch is continuously "on" when using this backpanel and all eight module outputs are simultaneously accessible to high-speed data acquistion (ADC) boards.

On-board jumpers permit paralleling two SCMPB05 boards to form a SCMPB01 equivalent. An additional set of inter-channel bridge jumpers permits connecting an input module's output to an output module's input, providing two levels of isolation (Figures 12, 13).

Jumpers on the SCMPB05 permit user selection of low (i.e. channels 0-7) or high (i.e. channels 8-15) addresses.

A temperature sensor mounted on each channel provides cold junction compensation for thermocouple input modules (see Fig. 13 for schematic). Field connections are terminated with four screw terminals at each module site. Use system interface cable SCMXCA004-XX for connection to the host system.

Specifications

Operating Temperature Relative Humidity	–40°C to +85°C 95% Noncondensing
Interface Connector: Field System	 high density screw clamp, 14 AWG max 26-pin, male header connector
Isolation: Input-to-Output Channel-to-Channel	 1500Vrms continuous, max 1500Vrms continuous, max

Ordering Information

Part Number	Description
SCMPB05	8-channel backpanel with standoffs for mounting.
SCMPB05-1	8-channel backpanel without cold junction compensation circuits and standoffs for mounting. Use when cost savings is desired and thermocouple input modules SCM5B37 and SCM5B47 will not be used.
SCMPB05-2	8-channel backpanel with DIN rail mounting option. The backpanel is mounted on a plate which is captured by the SCMXBExx DIN rail mounting elements. Shipped fully assembled.
SCMPB05-3	8-channel backpanel without cold junction compensation circuits and with DIN rail mounting option. Shipped fully assembled.

Electrical

Address Selection

Module addresses may be selected as low (channels 0-7) or high (channels 8- 15) using the sets of 3 pins labeled J5 through J12. Place a jumper over the two pins closest to the ribbon cable connectors, P1 and P2, to select a low address (factory configuration) or over the two pins furthest from the ribbon cable connectors, P1 and P2, to select a high address.

Adjacent Channel Jumper

Adjacent channels may be connected together to provide an isolated output signal from an isolated input module, providing two levels of 1500V isolation. This capability is provided with the seven jumpers labeled JP1–JP7. See page 57 for an example.

Refer to page 50 for additional notes on the P1 and P2 connectors, power requirements, fusing and grounding issues.

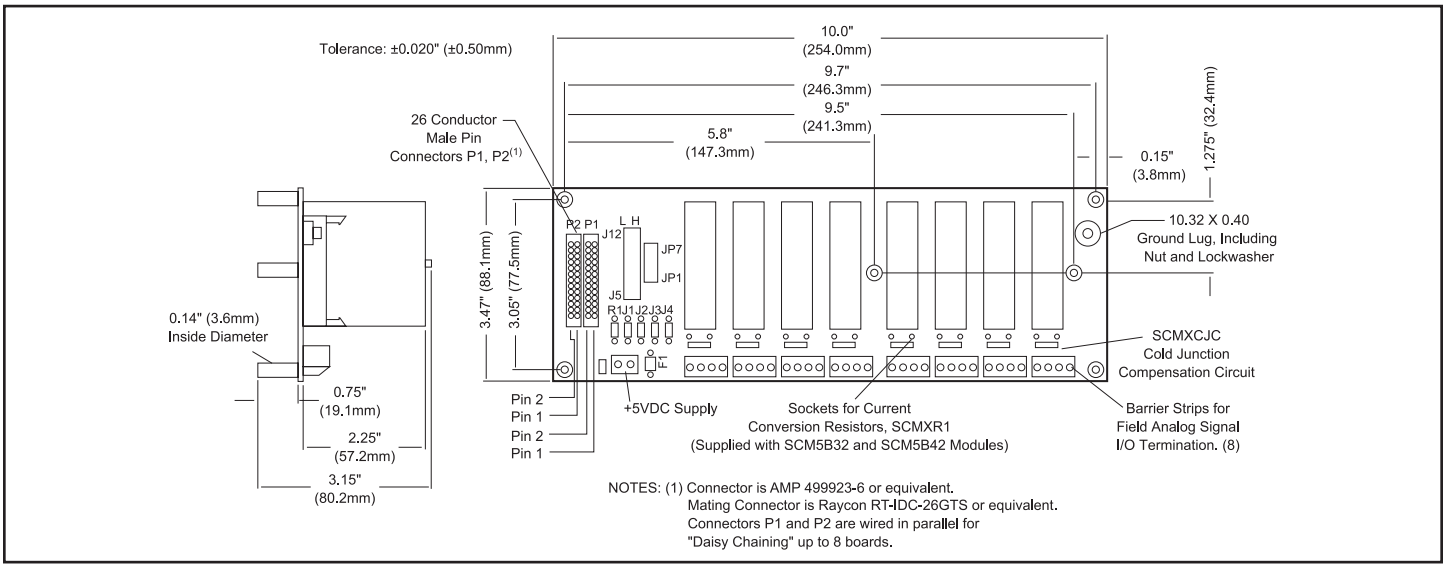

Figure 12: SCMPB05 Analog I/O Backpanel

©1995-2017 Dataforth Corporation, All Rights Reserved ISO9001:2008-Registered QMS

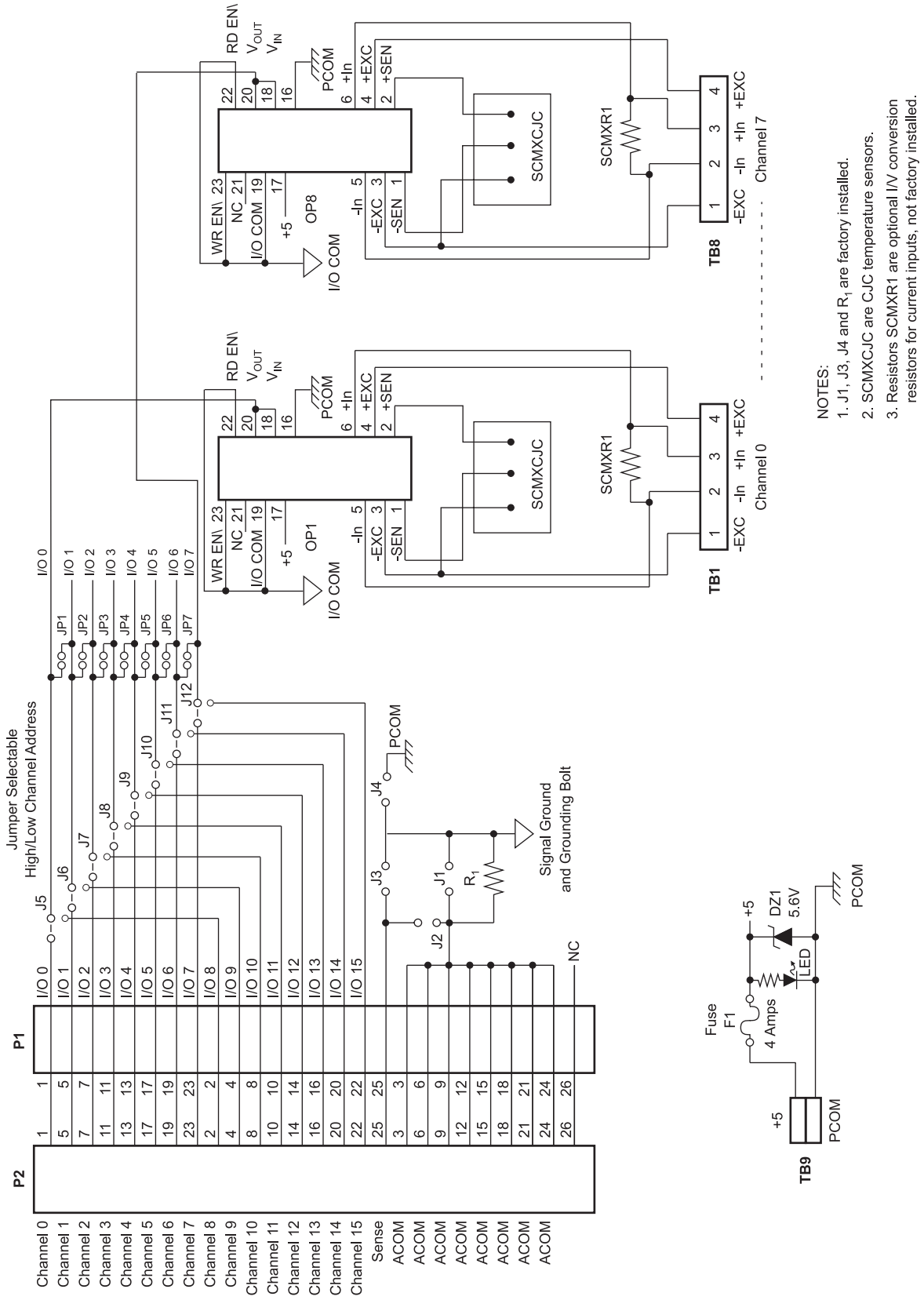

Figure 13: SCMPB05 Schematic

©1995-2017 Dataforth Corporation, All Rights Reserved ISO9001:2008-Registered QMS

SCMPB06

8-Position Analog I/O Backpanel, Multiplexed

Description

The SCMPB06 backpanel (Figure 14) can accept up to eight SCM5B modules in any combination. It can be mounted on the SCMXRK-002 19-inch metal rack. The SCMPB06 has two analog buses; one for analog input and one for analog output. This two-bus configuration takes advantage of the switch controlled outputs on the input modules and the track-and-hold inputs on the output modules. A temperature sensor is mounted on each channel to provide cold junction compensation for thermocouple input modules (see Figure 15 for schematic). Field connections are terminated with four screw terminals at each module site. Up to eight SCMPB06 backpanels may be daisy-chained. Use SCMXCA004-XX cable for daisy chaining and connecting to host computer.

Jumpers on the SCMPB06 permit user selection of low (i.e. channels 0-7) or high (i.e. channels 8-15) addresses.

Electrical

Address Selection

Module read and write addresses may be selected as low (channels 0-7) or high (channels 8-15) using the four sets of 3 position jumpers labeled J5 through J8. Place a jumper over the two pins furthest from the field I/O termination blocks on all four sets to select a low address (factory configuration) or over the two pins closest to the field I/O termination blocks on all four sets to select a high address.

The SCMPB06 backpanel has address decoding circuitry to allow multiplexing any combination of up to 8 input or output modules. Capability is also provided in the address decode circuitry to expand the system to 64 channels (eight SCMPB06 backpanels) of multiplexed input or output. Jumpers select which set of 16 addresses are assigned to a particular backpanel. The Read Address group assigns a set of 16 addresses for input modules, and the Write Address group assigns a set of 16 addresses for output modules. The table on the next page shows the correlation of jumper position to address range. Refer to page 53 for additional notes on the P1 and P4 connectors, power requirements, fusing, and grounding issues.

Modules with system output of ±10V or 0-10V cannot be mixed with modules with system output of ±5V or 0-5V within a given system.

Ordering Information

Part Number	Description
SCMPB06	8-channel backpanel with standoffs for mounting.
SCMPB06-1	8-channel backpanel without cold junction compensation circuits and standoffs for mounting. Use when cost savings is desired and thermocouple input modules SCM5B37 and SCM5B47 will not be used.
SCMPB06-2	8-channel backpanel with DIN rail mounting option. The backpanel is mounted on a plate which is captured by the SCMXBExx DIN rail mounting elements. Shipped fully assembled.
SCMPB06-3	8-channel backpanel without cold junction compensation circuits and with DIN rail mounting option. Shipped fully assembled.

Specifications

Operating Temperature	–40°C to +85°C
Relative Humidity	95% Noncondensing
Interface Connector:	
Field	high density screw clamp, 14 AWG max
System	26-pin, male header connector
Isolation:	
Input-to-Output	1500Vrms continuous, max
Channel-to-Channel	1500Vrms continuous, max
Address Input Logic Levels:	
Max Logic "0"	0.8V
Min Logic "1"	2.0V
I_I Input Current, "0" or "1"	0.1µA max at 25°C 1.0µA max –25°C to +85°C
RD EN\ or WR EN\ Signal Delay from Connector P1 to Channels 0-7	
Standalone (address 0-7)	51ns at 25°C, 64ns at –25°C to +85°C
Expanded (address 8-63)	100ns at 25°C, 126ns at –25°C to +85°C

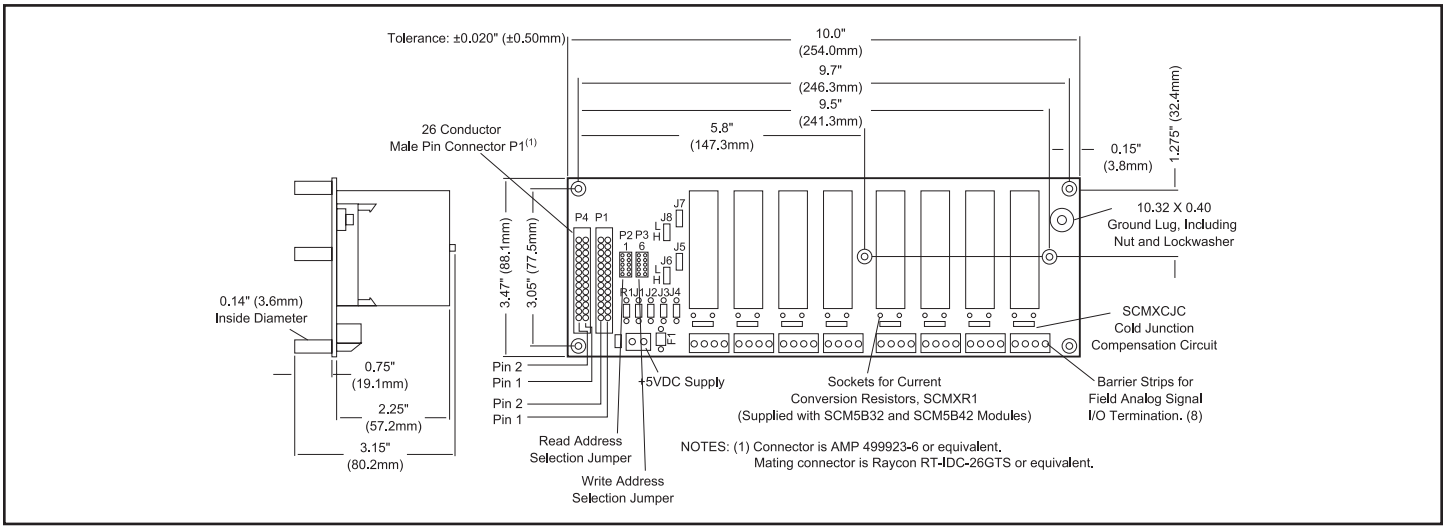

Figure 14: SCMPB06 Analog I/O Backpanel

©1995-2017 Dataforth Corporation, All Rights Reserved ISO9001:2008-Registered QMS

Address Selection Jumpers

Read Address Jumper (P2)	Write Address Jumper (P3)	High/Low Channel Address (J5,J6,J7,J8)	Address Range
1	6	L	0-7 Stand Alone
1	6	H	8-15 Stand Alone
2	7	L	48-55 Expanded
2	7	H	56-63 Expanded
3	8	L	32-39 Expanded
3	8	H	40-47 Expanded
4	9	L	16-23 Expanded
4	9	H	24-31 Expanded
5	10	L	0-7 Expanded
5	10	H	8-15 Expanded

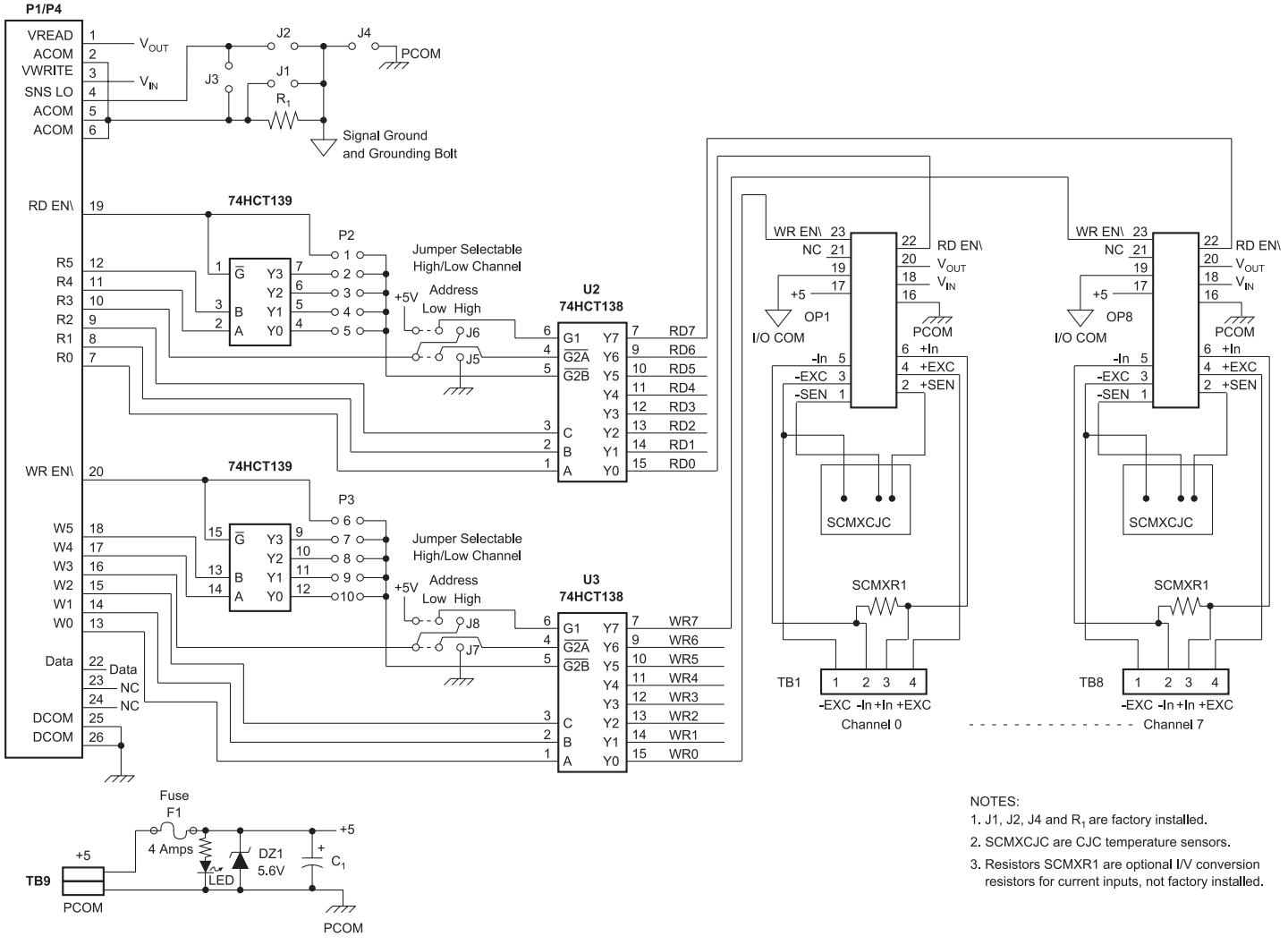

NOTES:
1. J1, J2, J4 and R_1 are factory installed.
2. SCMXCJC are CJC temperature sensors.
3. Resistors SCMXR1 are optional I/V conversion resistors for current inputs, not factory installed.

Figure 15: SCMPB06 Schematic

©1995-2017 Dataforth Corporation, All Rights Reserved ISO9001:2008-Registered QMS

SCMPB07

8-Position Backpanel, High Density

Description

The SCMPB07 8-channel high-density backpanel can accept any of the SCM5B analog modules in any mixture. Its overall width is 5.5 inches (139.7mm) versus 10 inches (254mm) for the SCMPB05 and SCMPB06 8-channel backpanels. Separate analog signal paths are provided for each channel. Each channel provides four high-density screw terminals for field connections and two high-density screw terminals for host system connection. It also provides a jumper on each channel to optionally connect or isolate each module's I/O common from other channel's I/O common and/or power common (Figure 16).

See Figure 11 on page 55 for schematic.

SCMPB07 and SCMPB07-1 can be upgraded to DIN rail mounting. The following accessories are required for mounting one SCMPB07 or one SCMPB07-1 backpanel (for a visual example, reference SCMPB03/ SCMPB04 page 54, Figure 8):

Qty	Model	Description
2	SCMXBEFE	Base element with snap foot
2	SCMXSE	Side element
2	SCMXBE	Base element without snap foot
12	SCMXVS	Connection pins

Ordering Information

Part Number	Description
SCMPB07	8-channel backpanel. No mounting hardware included.
SCMPB07-1	8-channel backpanel without cold junction compensation circuits. Use when cost savings is desired and thermocouple input modules SCM5B37 and SCMPB47 will not be used.
SCMPB07-2	8-channel backpanel with DIN rail mounting hardware. Shipped fully assembled.
SCMPB07-3	8-channel backpanel without cold junction compensation circuits and with DIN rail mounting hardware. Shipped fully assembled.

Specifications

Operating Temperature	–40°C to +85°C
Relative Humidity	95% Noncondensing
Interface Connector:	
Field	high density screw clamp, 14 AWG max
System	high density screw clamp, 14 AWG max
Isolation:	
Input-to-Output	1500Vrms continuous, max
Channel-to-Channel	1500Vrms continuous, max

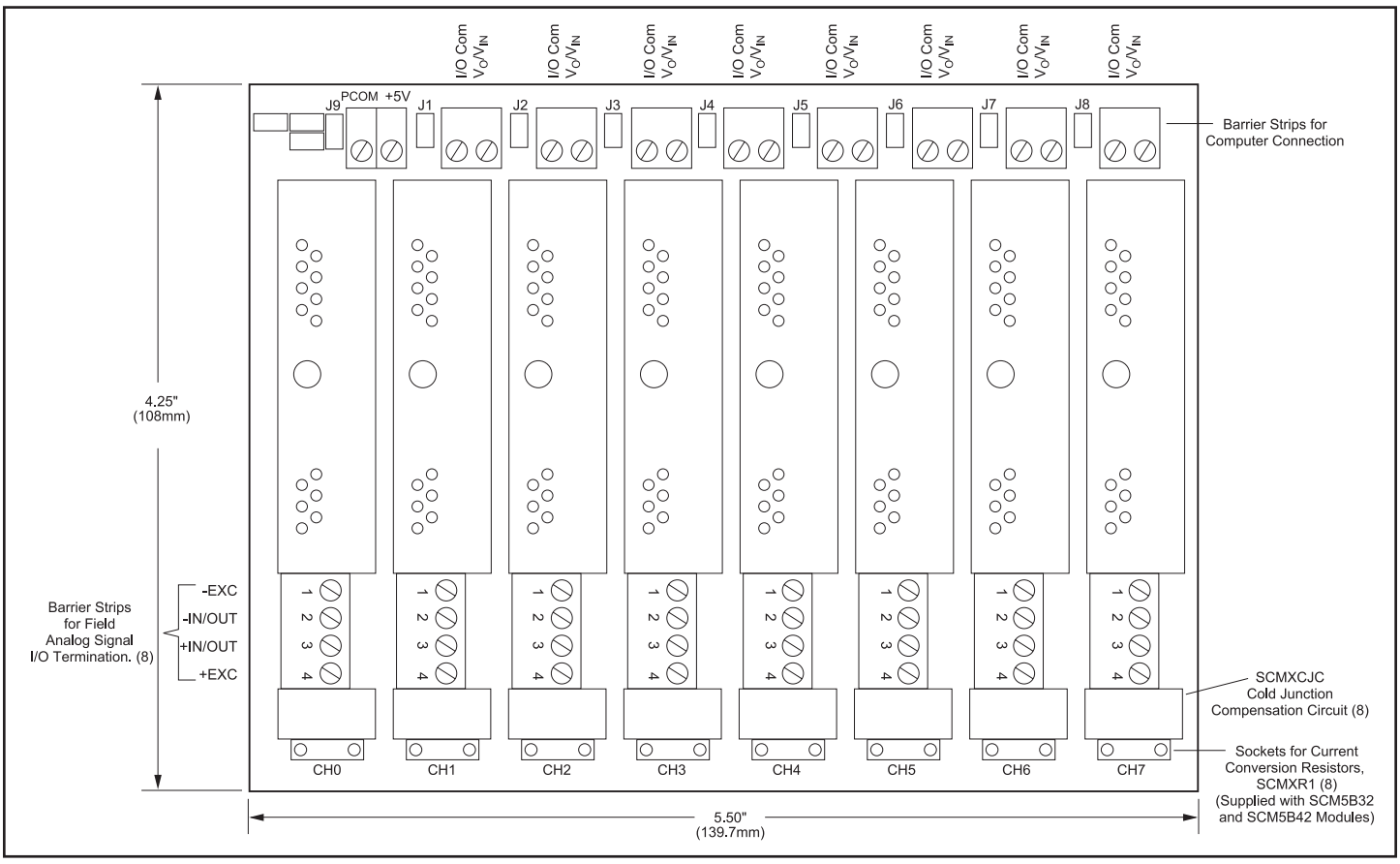

Figure 16: SCMPB07 Analog I/O Backpanel

©1995-2017 Dataforth Corporation, All Rights Reserved ISO9001:2008-Registered QMS

SCMXEV

Analog Module Evaluation Board

Description

The SCMXEV is a single channel board with a test socket for SCM5B module evaluation (Figure 17). All signal input/output, control, and power connections are connected to terminal blocks for ease of user access. A cold junction temperature sensor circuit is included for evaluation of thermocouple modules (see Figure 18 for schematic).

The SCMXEV is mechanically compatible with DIN rail mounting. The following accessories are required for mounting one SCMXEV board (for a visual example, reference SCMPB03/SCMPB04 page 54, Figure 8):

Qty	Model	Description
2	SCMXBEFE	Base element with snap foot
2	SCMXSE	Side element
4	SCMXVS	Connection pins

Two jumpers are provided for customer use. The first, J1, provides a current path between +5V Power Common (module pin 16) and I/O Common (module pin 19). A path must exist between the host control logic power common and module I/O Common for proper operation of the module output switch or trackand- hold circuit. If this connection exists elsewhere in the system, jumper J1 should be removed since possible ground loops could exist. Other connections of power ground and signal ground usually occur at the A/D or D/A converter of the host measurement system.

Jumper J2 is used in the cold junction compensation circuit. If it is installed, the compensation circuit is enabled and will provide the proper compensation voltage to correct for the thermoelectric effect at the +In and –In screw terminals.

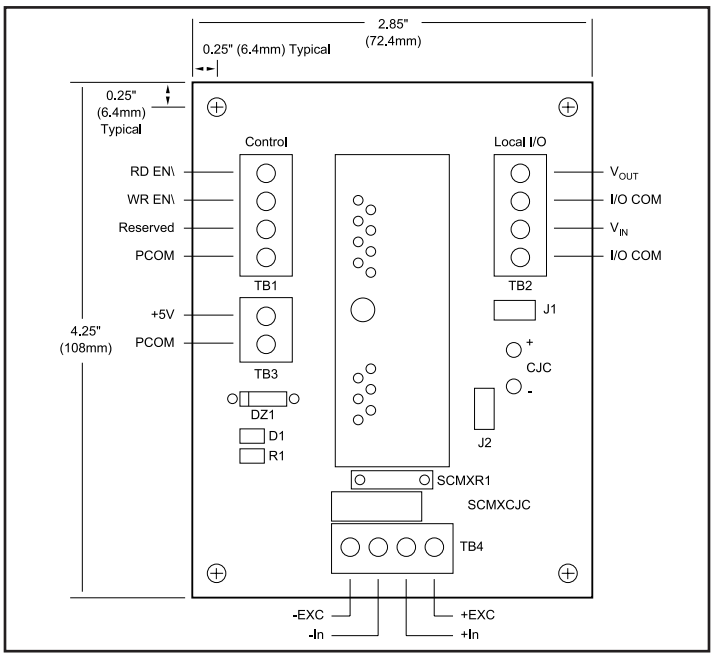

Figure 17: SCMXEV Evaluation Board Dimensions and Pin Layout

If an external simulation voltage is desired for cold junction compensation, J2 should be removed. The external voltage is applied at the sockets labled CJC+ and CJC–. An external voltage of 510.0mV corresponds to an ambient temperature of +25 °C. The transfer function of the onboard compensation circuit is V_{CJC} = 0.510 –0.0025(T–25)V.

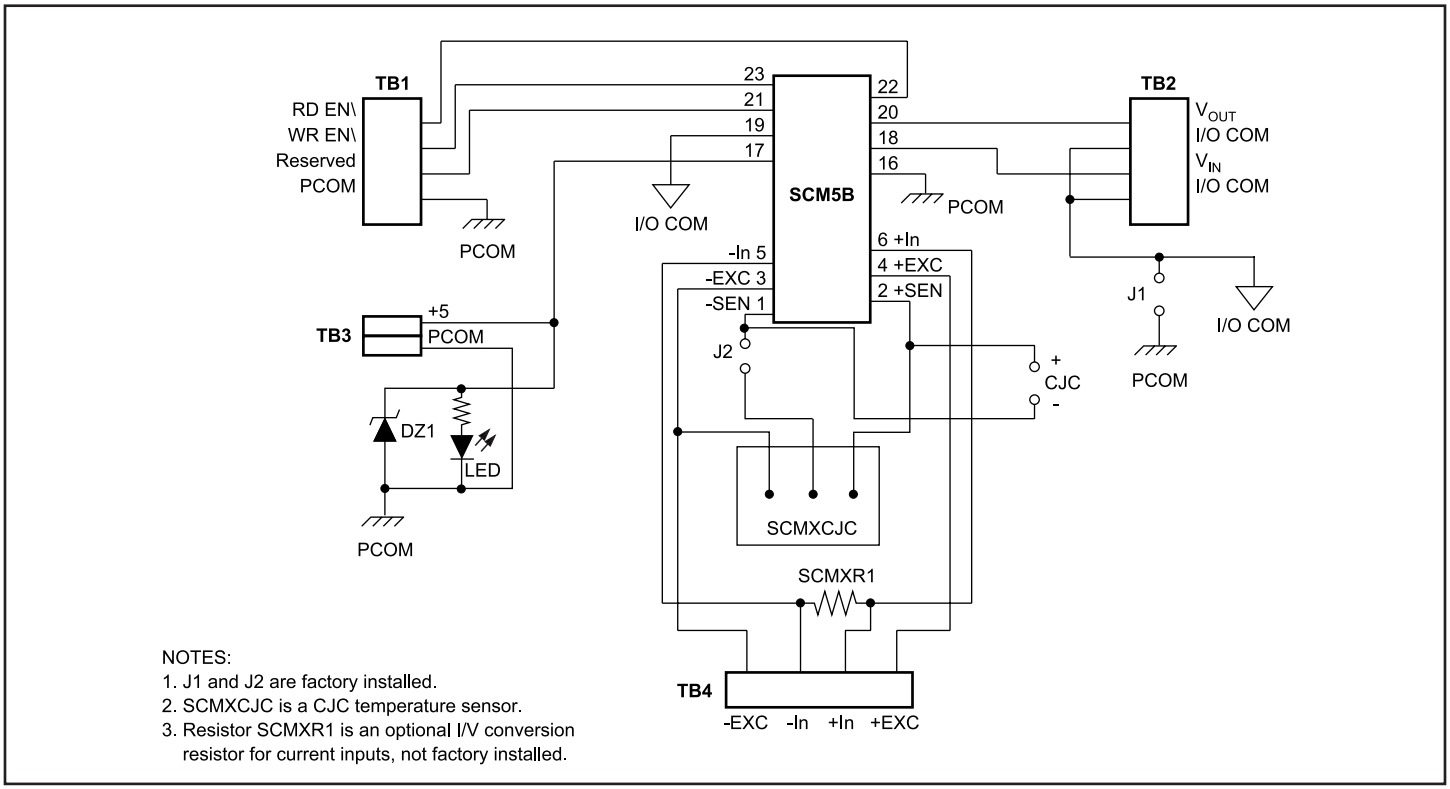

NOTES:
1. J1 and J2 are factory installed.
2. SCMXCJC is a CJC temperature sensor.
3. Resistor SCMXR1 is an optional I/V conversion resistor for current inputs, not factory installed.

Figure 18: SCMXEV Evaluation Board Schematic

©1995-2017 Dataforth Corporation, All Rights Reserved ISO9001:2008-Registered QMS

SCMXCA004-01, - 02

Interface Cable

Description

SCMXCA004-XX

System interface cable for the SCMPB01/02/05/06 backpanels. This is a 26 conductor ribbon cable with a mass-terminated socket connector installed on each end. It can be ordered in lengths of 1m and 2m; -xx denotes required length in meters (see Figure 19).

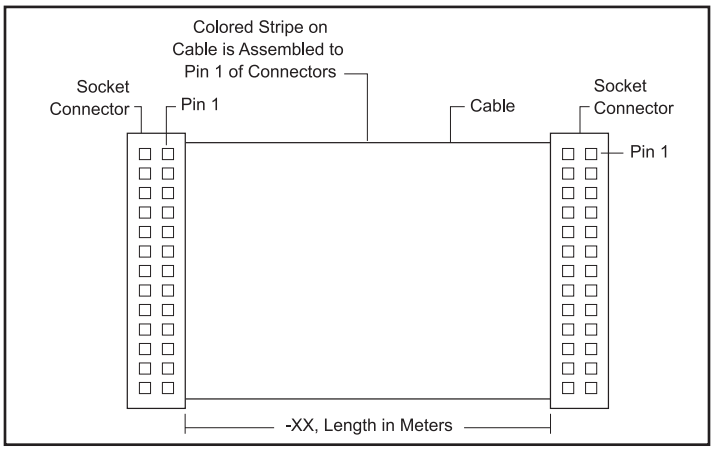

Figure 19: SCMXCA004-XX System Interface Cable

SCMXIF (-DIN)

Universal Interface Board

Description

The SCMXIF is a universal interface board which converts a 26-pin ribbon cable input to 26 screw terminals for discrete wire. It can be mounted on the back of the SCMXRK-002 mounting rack (SCMXIF) or on a DIN rail (SCMXIF-DIN). Required mounting hardware is included. Use SCMXCA004-XX cable (see Figure 20 for dimensions).

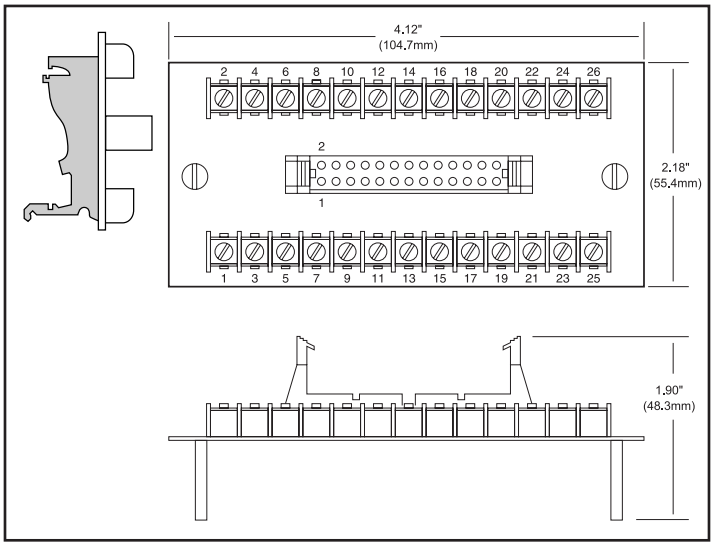

Figure 20: SCMXIF Universal Interface Board Dimensions

SCMXRK-002

19-Inch Metal Mounting Rack

Description

The SCMXRK-002 is a 19-inch metal rack for mounting the SCMPB01/02/05/06, SCM7BP04/08/16, SCMVAS-PB8/16 and isoLynx® SLX200-xx backpanels. It also provides capability to mount the SCMXPRT-001, SCMXPRE-001, SCMXPRT-003 or SCMXPRE-003 power supplies, and the SCMXIF interface board (see Figure 21 for dimensions).

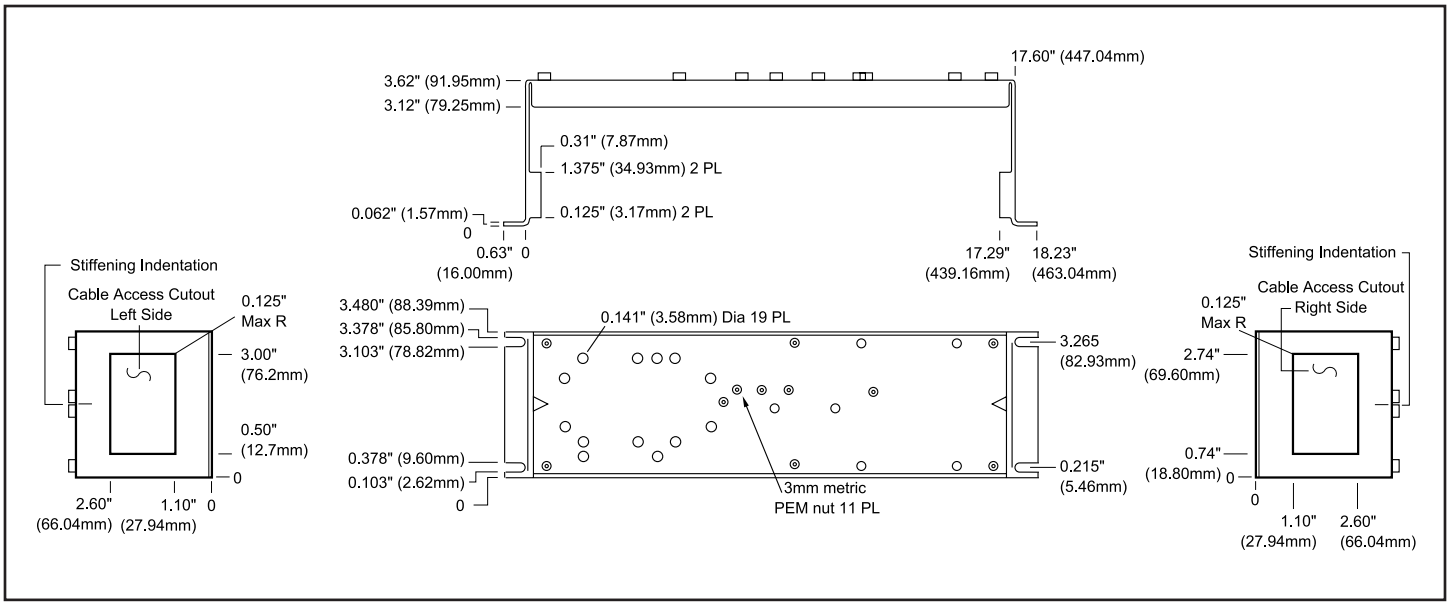

Figure 21: SCMXRK-002 Analog Rack Dimensions

©1995-2017 Dataforth Corporation, All Rights Reserved ISO9001:2008-Registered QMS

SCMXCJC

Encapsulated Cold Junction Compensation

Description

The SCMXCJC is the identical circuit used on the SCMPB01/02/03/04/05/06/07 backpanels except it is packaged as a component for use in customer designed mounting boards (Figure 22). When interfaced to an SCM5B37 or 47 module the transfer function of the voltage across the +SEN and –SEN pins is V_{CJC} = 0.510 –0.0025 (T –25)V.

Specifications

Accuracy	+25°C	±0.25°C
	+5°C to +45°C	±0.5°C
	–40°C to +85°C	±1.25°C

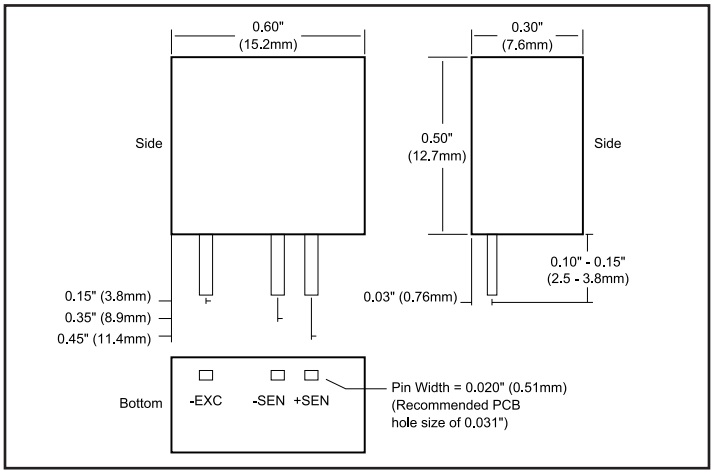

Figure 22: SCMXCJC Physical Dimensions and Pin Layout

SCM5BPT

Pass Thru Module

Description

The SCM5BPT is a pass-through module used to establish a direct connection between an input signal and the SCM5B series backplane analog bus. It has unity gain and no isolation. It accepts up to ±10V input and provides up to ±10V output.

SCM5BPT-1367

Pass Thru Module with Switch

Description

The SCM5BPT-1367 is a pass-through module used to establish a direct connection between an input signal and the SCM5B series backplane analog bus. It has unity gain, no isolation, and a logic controlled output switch which allows sharing of a common analog bus with other SCM5B modules. It accepts up to ±10V input and provides up to ±10V output. Resettable fuses and overvoltage protection circuitry protect computer-side electronics.

SCMXJP-003

Jumper Strap

Description

Package of 10 jumpers for connecting adjacent input/output modules on the SCMPB01 backpanel. This connection is made if it is desired to direct the output of any input module to the input of an adjacent output module. The jumpers can also be used for configuring I/O addresses on the SCMPB02 backpanel.

SCMXR1

Current Conversion Resistor

Description

A precision 20Ω, 0.1%, 10ppm/°C resistor used with the SCM5B32 current input module or SCM5B42 two-wire transmitter interface module (Figure 23). Sockets are provided on the SCMPB01/02/03/04/05/06/07 and SCMXEV backpanels to allow installation of this resistor. One SCMXR1 is shipped with each SCM5B32 or SCM5B42 module.

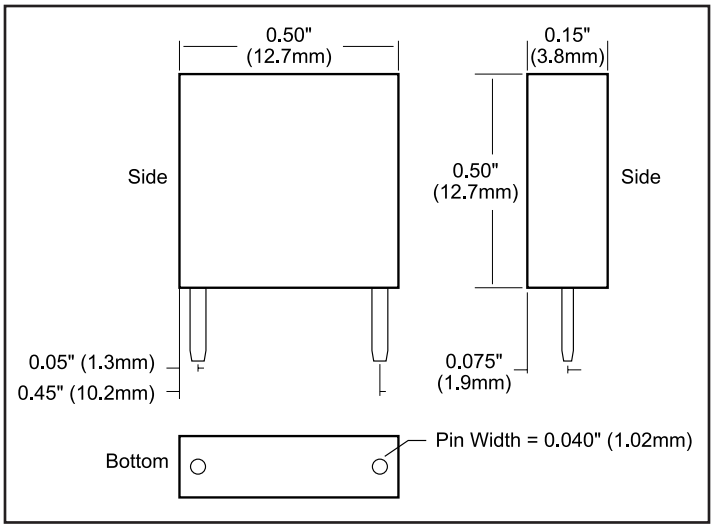

Figure 23: SCMXR1 Physical Dimensions

©1995-2017 Dataforth Corporation, All Rights Reserved ISO9001:2008-Registered QMS

SCM5B-PROTO

Breadboard Kit

Description

The SCM5B-PROTO breadboard kit was designed to allow users to incorporate their own module functions using an SCM5B format. The kit includes a pc board designed for breadboard circuits, a module case, header and mounting screw. Contact the factory for additional information.

SCMXRAIL1-XX, SCMXRAIL2-XX, SCMXRAIL3-XX

DIN Rail

Description

Three styles of DIN rail are available. Specify length (-xx) in meters when ordering, -01 for 1 meter or -02 for 2 meter.

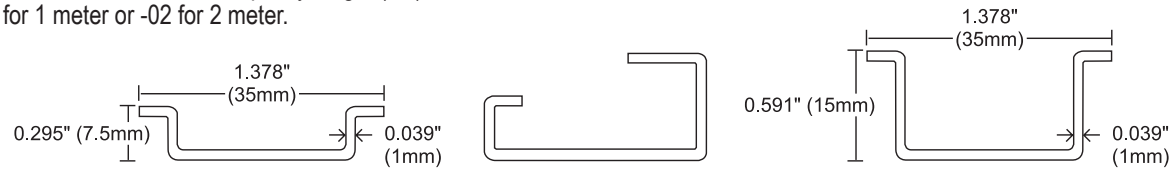

SCMXRAIL1-XX (EN 50022-35x7.5) | SCMXRAIL2-XX (EN 50035-G32) | SCMXRAIL3-XX (EN 50022-35x15)

Figure 24: DIN Rail Styles

SCMXPRT-001/D, SCMXPRE-001/D

Power Supplies

Description

The SCMXPRT-001/D and SCMXPRE-001/D encapsulated power supplies are available in 120VAC or 220VAC input voltage ranges and provide 5VDC outputs suitable for all SCM5B modules. They are designed to mount on the SCMXRK- 002 metal rack or DIN rail EN 50022-35x7.5 (D versions). The supplies are UL-recognized. Their compact size and low weight are ideal for high-density applications (see Figure 25).

Specifications Typical* at T_A = +25°C

Module	SCMXPRT-001/D	SCMXPRE-001/D
Input Voltage Range, 47Hz to 63Hz	105-125VAC	200-240VAC
Output Voltage	5VDC	5VDC
Output Current, +50°C	1A (derate 2.5%/°C above +50°C)	1A
Operating Temperature	–25°C to +71°C	–25°C to +71°C
Dielectric Withstand V (input to ground)	2500Vrms	2500Vrms
Line Regulation	±0.05%	±0.05%
Load Regulation	±0.15%	±0.15%
Output Ripple, max	2mVrms	2mVrms
Overvoltage Protection	6.2V	6.2V
Weight	1.25 lbs (567g)	1.25 lbs (567g)

NOTES:
* Contact factory or your local Dataforth sales office for maximum values.
Supplies are UL recognized, File No. E65890.

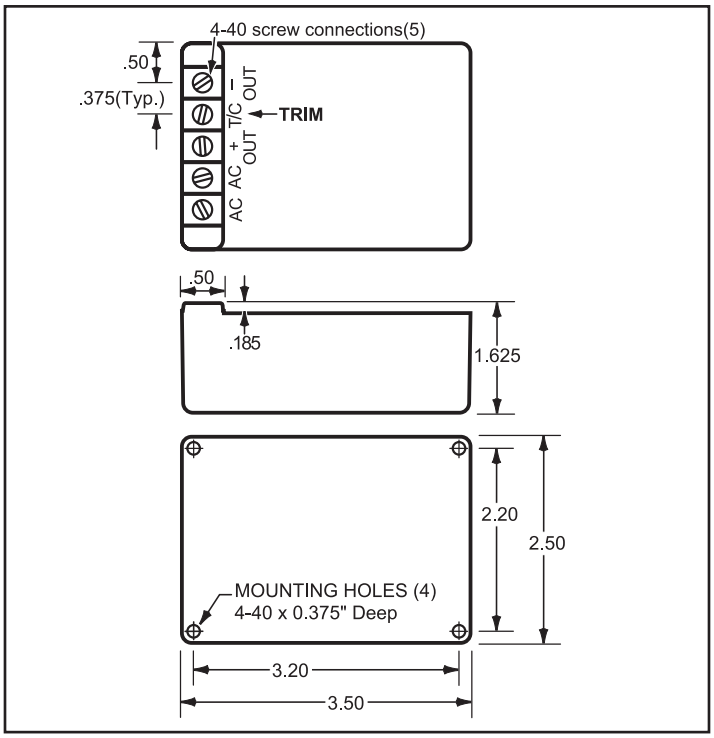

Figure 25: SCMXPRT-001/D and SCMXPRE-001/D Physical Dimensions

©1995-2017 Dataforth Corporation, All Rights Reserved ISO9001:2008-Registered QMS

SCMXPRT-003, SCMXPRE-003

Power Supplies

Description

The SCMXPRT/E-003 Linear Power Supplies are available in 120VAC or 220VAC input. They have sufficient output current capacity to supply any combination of SCM5B modules. The SCMXRK-002 metal rack provides mounting capability for the SCMXPRT/E-003 power supplies (see Figure 26).

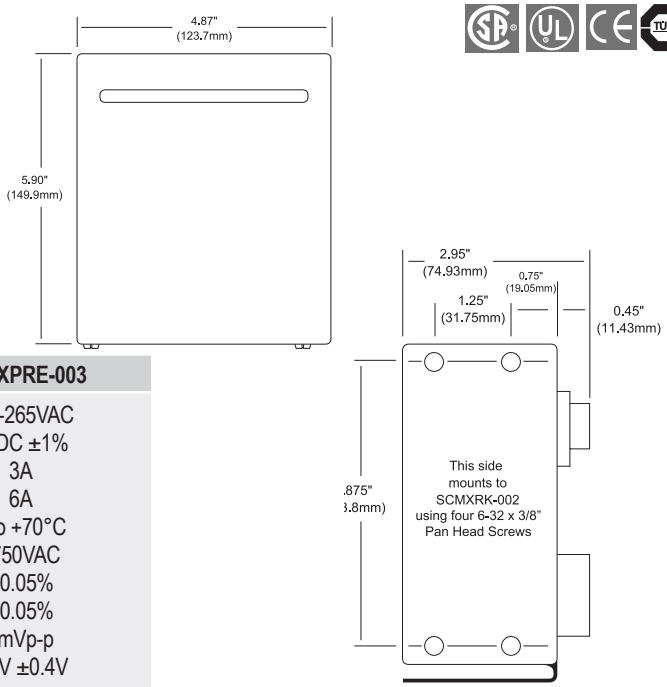

Figure 26: SCMXPRT-003/SCMXPRE-003 Physical Dimensions

Specifications Typical* at T_A = +25°C

Module	SCMXPRT-003	SCMXPRE-003
Input Voltage Range, 47Hz to 63Hz	104-132VAC	207-265VAC
Output Voltage	5VDC ±1%	5VDC ±1%
Output Current (at +70°C)	3A	3A
Output Current (at +50°C)	6A	6A
Operating Temp	0 to +70°C	0 to +70°C
Dielectric Withstand Voltage (input to ground)	3750VAC	3750VAC
Line Regulation (10% line change)	±0.05%	±0.05%
Load Regulation (50% load change)	±0.05%	±0.05%
Output Ripple (max)	5mVp-p	5mVp-p
Overvoltage Protection (factory set)	6.2V ±0.4V	6.2V ±0.4V

NOTES:
*Contact factory or your local Dataforth sales office for maximum values.
Both supplies are tested and certified by TUV to VDE 0806 and IEC 380. They are UL recognized (File Number E55974) and CSA Certified (CSA File Number LR38879).

PWR-4505

25W Single Output Industrial DIN Rail Switching Power Supply

Specifications Typical* at T_A = +25°C

Input Frequency Input Current Inrush Current Efficiency	85 to 264VAC, 120 to 370VDC 47 to 63Hz 1.5A/115VAC, 0.75A/230VAC Cold start 30A/115VAC, 60A/230VAC 72%
Output Voltage & Current Rating Temperature Coefficient Ripple Voltage	5V, 5A ±0.03%/°C 100mVp-p
Overload Protection Over Voltage Protection Over Temperature Protection	105 to 150% rated output power 5.75 to 6.75V 135°C detect on heatsink of power transistor
Dielectric Strength	Between input and output terminals: 3kV, 1 minute Between input and FG: 1.5kV, 1 minute Between output and FG: 0.5kV, 1 minute
Insulation Resistance	Between input and output terminals/input and FG/ output and FG: 100MΩ/500VDC
Operating Temperature Storage Temperature Relative Humidity	–10°C to +50°C –20°C to +85°C 10 to 95%
Mechanical Dimensions (l)(w)(h)	3.66" x 3.07" x 2.24" (93mm x 78mm x 57mm)
Terminal Screw	M3

NOTES:
*Contact factory or your local Dataforth sales office for maximum values.

Features

- Universal AC Input (85 to 264VAC)
- DC Compatible Input (120 to 370VDC)
- Protections: Short Circuit, Overload, Over Voltage, Over Temperature
- Mounts on DIN Rail TS-35/7.5 & 15
- Approvals: UL, CUL, TUV, CB, CE
- CE Compliant, UL 508 Listed
- TUV EN60950-1 Approved
- Compliant with EMC Directive EN50082-2
- LED Indicator for Power On

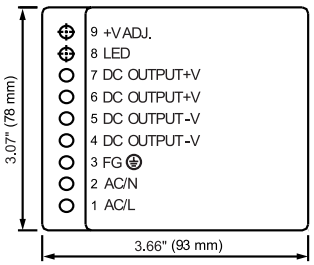

Terminal Pin No. Assignment

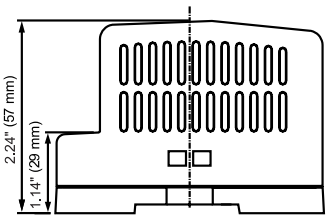

Figure 27 : PWR-4505 Physical Dimensions

©1995-2017 Dataforth Corporation, All Rights Reserved ISO9001:2008-Registered QMS

SCM7B

Isolated Process Control Signal Conditioning Products

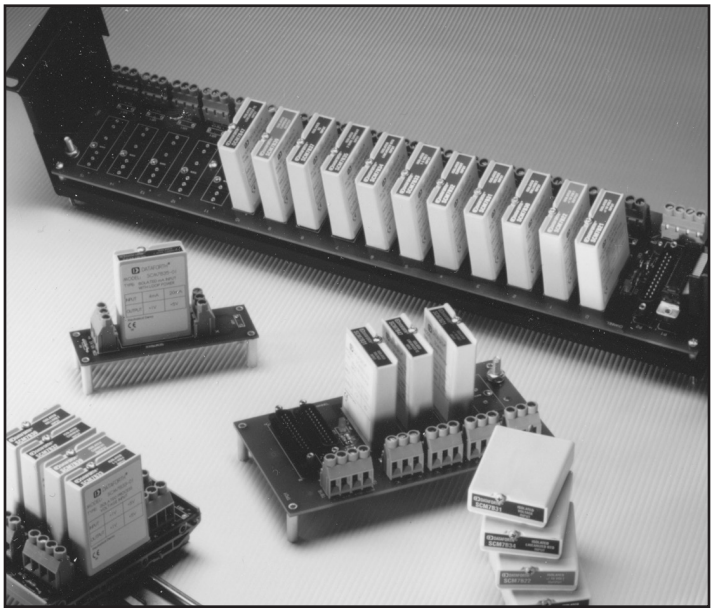

Features

- ±0.03% Accuracy (Typical)
- ±0.01% Linearity
- 1500Vrms Transformer Isolation & 120Vrms Field-side Protection
- ANSI/IEEE C37.90.1 Transient Protection
- Wide Supply Voltage, 14 to 35VDC
- 5-Pole Low-Pass Filtering
- Low Peak and RMS Noise
- Low Drift Input Circuitry for Long-Term Stability
- Up to 160dB CMRR
- 85dB NMR at 60Hz, 80dB at 50Hz
- –40°C to +85°C Operating Temperature
- Backpanels Allow Use of Industry Standard Digital I/O, Solid State Relay Modules
- DIN Rail Mounting
- CSA C/US Certified (Class I, Division 2, Groups A, B, C, D)
- CE and ATEX Compliant
- Manufactured per RoHS II Directive 2011/65/EU

SCM7B Modules

SCM7B Isolated Process Control Signal Conditioning modules include a complete selection of backpanels, DIN rail mounting accessories, interface cables, and rack mounting hardware. Each SCM7B module provides a single channel of isolated analog input or output. Various input modules accept analog voltage or current signals from all types of field sensors and sources, filter, isolate, amplify, linearize, and convert these input signals to high-level analog outputs suitable for use in a process control system. Output modules accept high-level analog voltage signals from a process control system, then buffer, isolate, filter, and amplify before providing a current or voltage output to a field device.

Custom Signal Conditioning

Custom modules are available: consult factory for minimum quantity and pricing details on custom input ranges, output ranges, bandwidth, and other key parameters.

SCM7B Selection Guide

ISOLATED VOLTAGE INPUT MODULES Page 68

MODEL	INPUT RANGE	OUTPUT RANGE
SCM7B21	±10V	±10V
SCM7B30-01	0 to +10mV	†
SCM7B30-02	0 to +100mV	†
SCM7B30-03	0 to +1V	†
SCM7B30-05	+1 to +5V	†
SCM7B30-06	±10mV	†
SCM7B30-07	±100mV	†
SCM7B30-08	±1V	†
SCM7B31-01	0 to +10V	†
SCM7B31-02	±5V	†
SCM7B31-03	±10V	†
SCM7B31-04	0 to +5V	†
SCM7B31-05	0 to +20V	†
SCM7B31-06	±20V	†
SCM7B31-07	0 to +50V	†
SCM7B31-08	±50V	†

ISOLATED BIPOLAR VOLTAGE OUTPUT MODULES Page 70

MODEL	INPUT RANGE	OUTPUT RANGE
SCM7B22	±10V	±10V OF SPAN

ISOLATED PROCESS CURRENT INPUT MODULES Page 72

MODEL	INPUT RANGE	OUTPUT RANGE
SCM7B32-01	4 to 20mA	†
SCM7B32-02	0 to 20mA	†

ISOLATED PROCESS VOLTAGE INPUT MODULES Page 72

MODEL	INPUT RANGE	OUTPUT RANGE
SCM7B33-01	+1 to +5V	†
SCM7B33-02	0 to +5V	†

ISOLATED LINEARIZED 100Ω Pt RTD INPUT MODULES Page 74**

MODEL	INPUT RANGE	OUTPUT RANGE
SCM7B34-01	–100°C to +100°C (–148°F to +212°F)	†
SCM7B34-02	0°C to +100°C (+32°F to +212°F)	†
SCM7B34-03	0°C to +200°C (+32°F to +392°F)	†
SCM7B34-04	0°C to +600°C (+32°F to +1112°F)	†
SCM7B34-05	–50°C to +350°C (–58°F to +662°F)	†

ISOLATED LINEARIZED 120Ω Ni RTD INPUT MODULES Page 74**

MODEL	INPUT RANGE	OUTPUT RANGE
SCM7B34N-01	0°C to +300°C (+32°F to +572°F)	†
SCM7B34N-02	0°C to +200°C (+32°F to +392°F)	†

©1995-2017 Dataforth Corporation, All Rights Reserved ISO9001:2008-Registered QMS

SCM7B Selection Guide (Continued)

ISOLATED 2-WIRE XMTR INTERFACE MODULES WITH LOOP POWER Page 76

MODEL	INPUT RANGE	OUTPUT RANGE
SCM7B35-01	4 to 20mA	†
SCM7B35-02	4 to 20mA	+2 to +10V

ISOLATED POTENTIOMETER INPUT MODULES Page 78

MODEL	INPUT RANGE	OUTPUT RANGE
SCM7B36-01	0 to 100Ω	†
SCM7B36-02	0 to 200Ω	†
SCM7B36-03	0 to 500Ω	†
SCM7B36-04	0 to 1kΩ	†
SCM7B36-05	0 to 5kΩ	†
SCM7B36-06	0 to 10kΩ	†

ISOLATED THERMOCOUPLE INPUT MODULES Page 80

MODEL	TYPE‡	INPUT RANGE	OUTPUT RANGE
SCM7B37J-01	J	–100°C to +760°C (–148°F to +1400°F)	†
SCM7B37J-10	J	0°C to +200°C (+32°F to +392°F)	†
SCM7B37J-11	J	0°C to +400°C (+32°F to +752°F)	†
SCM7B37J-12	J	0°C to +600°C (+32°F to +1112°F)	†
SCM7B37J-13	J	+300°C to +600°C (+572°F to +1112°F)	†
SCM7B37K-02	K	–100°C to +1350°C (–148°F to +2462°F)	†
SCM7B37K-20	K	0°C to +300°C (+32°F to +572°F)	†
SCM7B37K-21	K	0°C to +600°C (+32°F to +1112°F)	†
SCM7B37K-22	K	0°C to +1200°C (+32°F to +2192°F)	†
SCM7B37K-23	K	+600°C to +1200°C (+1112°F to +2192°F)	†
SCM7B37T-03	T	–100°C to +400°C (–148°F to +752°F)	†
SCM7B37E-04	E	0°C to +900°C (+32°F to +1652°F)	†
SCM7B37R-05	R	0°C to +1750°C (+32F to +3182°F)	†
SCM7B37S-06	S	0°C to +1750°C (+32F to +3182°F)	†
SCM7B37B-07	B	0°C to +1800°C (+32F to +3272°F)	†

ISOLATED PROCESS CURRENT OUTPUT MODULES Page 82

MODEL	INPUT RANGE	OUTPUT RANGE
SCM7B39-01	+1 to +5V	4 to 20mA
SCM7B39-02	0 to +10V	0 to 20mA
SCM7B39-03	0 to +10V	4 to 20mA
SCM7B39-04	4 to 20mA	4 to 20mA

ISOLATED VOLTAGE INPUT MODULES, WIDE BANDWIDTH Page 84

MODEL	INPUT RANGE	OUTPUT RANGE
SCM7B40-02	0 to +100mV	†
SCM7B40-03	0 to +1V	†
SCM7B40-07	±100mV	†
SCM7B40-08	±1V	†
SCM7B41-01	0 to +10V	†
SCM7B41-02	±5V	†
SCM7B41-03	±10V	†
SCM7B41-04	0 to +5V	†
SCM7B41-05	0 to +20V	†
SCM7B41-06	0 to +40V	†

ISOLATED LINEARIZED THERMOCOUPLE INPUT MODULES Page 86

MODEL	TYPE‡	INPUT RANGE	OUTPUT RANGE
SCM7B47J-01	J	0°C to +760°C (+32°F to +1400°F)	†
SCM7B47J-02	J	–100°C to +300°C (–148°F to +572°F)	†
SCM7B47K-03	K	0°C to +1300°C (+32°F to +2372°F)	†
SCM7B47K-04	K	0°C to +600°C (+32°F to +1112°F)	†
SCM7B47T-05	T	0°C to +400°C (+32°F to +752°F)	†
SCM7B47T-06	T	–100°C to +200°C (–148°F to +392°F)	†
SCM7B47E-07	E	0°C to +900°C (+32°F to +1652°F)	†
SCM7B47R-08	R	+500°C to +1750°C (+932°F to +3182°F)	†
SCM7B47S-09	S	+700°C to +1750°C (+1292°F to +3182°F)	†
SCM7B47B-10	B	+800°C to +1800°C (+1472°F to +3272°F)	†
SCM7B47N-11	N	+200°C to +1300°C (+392°F to +2372°F)	†

ACCESSORIES Page 89

MODEL	DESCRIPTION
SCM7BXEV	1 channel evaluation backpanel
SCM7BP01	1 channel backpanel
SCM7BP02	2 channel backpanel
SCM7BP01-DIN	SCM7BP01 with DIN rail mounting option
SCM7BP02-DIN	SCM7BP02 with DIN rail mounting option
SCMXBEFE	DIN Base element with snap foot
SCMXBE	DIN Base element without snap foot
SCMXSE	DIN Side elements
SCMXVS	DIN Connection pins
SCMXRAIL1-XX	DIN EN 50022-35x7.5 (slotted steel), length -XX in meters
SCMXRAIL2-XX	DIN EN 50035-G32 (slotted steel), length -XX in meters
SCMXRAIL3-XX	DIN EN 50022-35x15 (slotted steel), length -XX in meters
SCM7BP04	4 channel backpanel
SCM7BP04-DIN	SCM7BP04 with DIN rail mounting option
SCM7BP08	8 channel backpanel
SCM7BP08-DIN	SCM7BP08 with DIN rail mounting option
SCM7BP16	16 channel backpanel
SCM7BP16-DIN	SCM7BP16 with DIN rail mounting option
SCMXRK-002	19" rack for mounting backplanes
SCM7BXCA01	6" system adapter cable (DB25F to 26M)
SCM7BXCA02	3' system interface cable (DB25F to DB25F)
SCMXCA004-XX	xx-meter system interface cable (26F to 26F)
SCMXCA006-XX	System interface cable for backpanels
8BXIF	DB25 to screw terminal interface board
SCM7BXR1	250Ω current conversion resistor
SCM7BPT	Non-isolated signal pass thru module
SCM7B-PROTO	Breadboard kit

† OUTPUT RANGES AVAILABLE

Output Range	Part No. Suffix	Example
+1 to +5V	NONE	SCM7B30-01
0 to +5V	A	SCM7B30-01A
0 to +10V	D	SCM7B30-01D

POWER SUPPLIES Page 232

PWR-PS5R7W	Power Supply, 24V, 0.3A, 100-240VAC Input
PWR-PS5R15W	Power Supply, 24V, 0.65A, 100-240VAC Input
PWR-PS5R30W	Power Supply, 24V, 1.3A, 100-240VAC Input
PWR-PS5R60W	Power Supply, 24V, 2.5A, 100-240VAC Input
PWR-PS5R120W	Power Supply, 24V, 5.0A, 100-240VAC Input

‡THERMOCOUPLE ALLOY COMBINATIONS
STANDARDS: DIN IEC 584, ANSI MC96-1-82, JIS C 1602-1981

TYPE	MATERIAL
J	Iron vs. Copper-Nickel
K	Nickel-Chromium vs. Nickel-Aluminum
T	Copper vs. Copper-Nickel
E	Nickel-Chromium vs. Copper-Nickel
R	Platinum-13% Rhodium vs. Platinum
S	Platinum-10% Rhodium vs. Platinum
B	Platinum-30% Rhodium vs. Platinum-6% Rhodium
N	Nickel-14.2% Chromium-1.4% Silicon vs. Nickel-4.4% Silicon- 0.1% Magnesium

****RTD STANDARDS**

TYPE	ALPHA COEFFICIENT	DIN	JIS	IEC
100Ω PT	0.00385	DIN 43760	JIS C 1604-1989	IEC 751
120Ω NI	0.00672			

©1995-2017 Dataforth Corporation, All Rights Reserved ISO9001:2008-Registered QMS

SCM7B21/30/31

Isolated Analog Voltage Input Modules

Description

Each SCM7B21/30/31 voltage input module accepts one channel of analog voltage input which is filtered, isolated, amplified, and converted to a high-level analog voltage for output to the process control system (Figure 1).

These modules incorporate a five-pole filtering approach to maximize both time and frequency response by taking advantage of both Thomson (Bessel) and Butterworth characteristics. One pole of the filter is on the field side of the isolation barrier; four are on the process control system side.

After the initial field-side filtering, the input signal is chopped by a proprietary chopper circuit and transferred across the transformer isolation barrier, suppressing transmission of common mode spikes and surges. The signal is then reconstructed and filtered for process control system output.

Modules accept a wide 14 - 35VDC power supply range (+24VDC nominal). Their compact packages (2.13"x1.705"x0.605" max) save space and are ideal for high channel density applications. They are designed for easy DIN rail mounting using any of the -DIN backpanels.

Features

- Accepts Millivolt and Voltage Level Signals
- Provides High-Level Voltage Outputs
- 1500Vrms Transformer Isolation
- Accuracy, ±0.03% of Span Typical, ±0.1% Max
- ANSI/IEEE C37.90.1 Transient Protection
- Input Protected to 120Vrms Continuous
- Noise, 500µVp-p (5MHz), 250µVrms (100kHz)
- Up to 160dB CMRR
- 85dB NMR at 60Hz, 80dB at 50Hz
- Easy DIN Rail Mounting
- CSA C/US Certified
- CE and ATEX Compliant

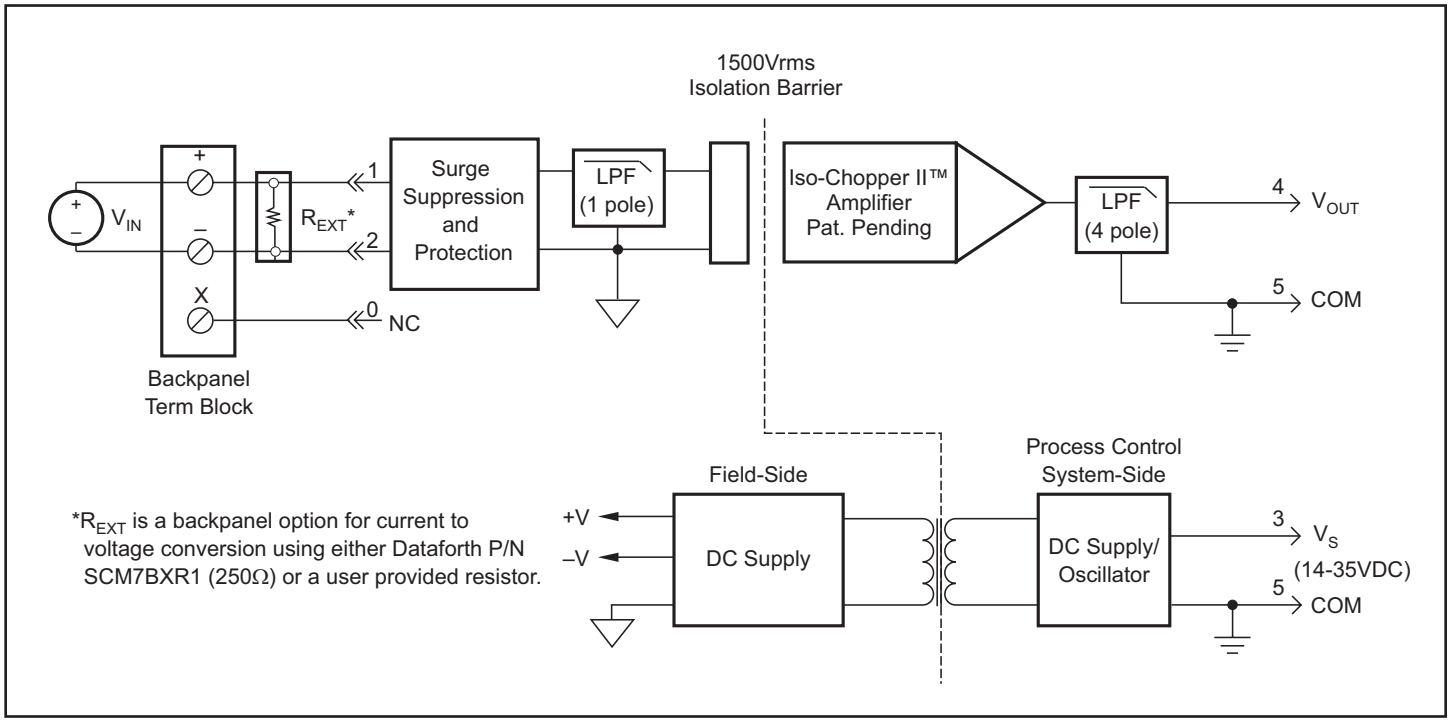

Figure 1: SCM7B21/30/31 Block Diagram

©1995-2017 Dataforth Corporation, All Rights Reserved ISO9001:2008-Registered QMS

Specifications

Typical* at 25°C and +24VDC

Module	SCM7B21	SCM7B30	SCM7B31
Input			
Signal Range	±10V	±10mV to ±1V	±1V to ±50V
Bias Current	±0.1nA	±0.5nA	±0.05nA
Resistance			
Normal	2MΩ min	50MΩ	500kΩ min
Power Off	2MΩ min	30kΩ min	500kΩ min
Overload	2MΩ min	30kΩ min	500kΩ min
Protection			
Continuous	120Vrms max	*	*
Transient	ANSI/IEEE C37.90.1	*	*
Output			
Signal Range(1)	±10V	†	†
Effective Available Power(1)	10mW	40mW	*
Resistance	<1Ω	*	*
Protection	Continuous Short to Ground	*	*
Voltage/Current Limit	±12V, ±14mA	*	*
CMV (Input-to-Output)			
Continuous	1500Vrms	*	*
Transient	ANSI/IEEE C37.90.1	*	*
CMRR (50 or 60Hz)	100dB	160dB	120dB
Accuracy(2)	±0.03% Span typical, ±0.1% Span max	*	*
Linearity(3)	±0.01% Span typical, ±0.02% Span max	*	*
Stability (–40°C to +85°C)			
Gain	±55ppm/°C	±35ppm/°C	±55ppm/°C
Input Offset	N/A(4)	±0.5µV/°C	±5µV/°C
Zero Suppression	N/A	±0.005%(V_Z)(5)/°C	*
Output Offset	±0.001% Span/°C	±0.002% Span/°C	*
Noise			
Peak at 5MHz B/W	1mV	500µV	*
RMS at 10Hz to 100kHz B/W	250µV	*	*
Peak at 0.1Hz to10Hz B/W	1µV RTI(6)	*	*
Frequency and Time Response			
Bandwidth, –3dB	300Hz	3Hz	*
NMR (50/60Hz)	80dB per Decade above 300Hz	80/85dB	*
Step Response, 90% Span	1.5ms	165ms	*
Supply Voltage	14 to 35VDC	*	*
Current(1)	16mA	12mA	*
Sensitivity	±0.0002%/%V_S	±0.0001%/%V_S	*
Mechanical Dimensions (h)(w)(d)	2.13" x 1.705" x 0.605" max (54.1mm x 43.3mm x 15.4mm max)	* *	* *
Environmental			
Operating Temperature Range	–40°C to +85°C	*	*
Storage Temperature Range	–40°C to +85°C	*	*
Relative Humidity	0 to 95% Noncondensing	*	*
Emissions EN61000-6-4	ISM, Group 1	*	*
Radiated, Conducted	Class A	*	*
Immunity EN61000-6-2	ISM, Group 1	*	*
RF	Performance A ±0.5% Span Error	*	*
ESD, EFT	Performance B	*	*

NOTES:
*Contact factory or your local Dataforth sales office for maximum values.
* Specification same as preceding model.
(1) Output Range and Supply Current specifications are based on minimum output load resistance. Minimum output load resistance is calculated by V_{OUT}^2/P_E, where P_E is the Output Effective Available Power that guarantees output range, accuracy, and linearity specifications.
(2) Accuracy includes the effects of repeatability, hysteresis, and linearity.
(3) Linearity is calculated using the best-fit straight line method.
(4) Input offset term included in output offset specification.
(5) V_Z is the nominal input voltage that results in a 0V output.
(6) RTI = Referenced to Input.
(7) SCM7B21 is available only as ±10V output.

Ordering Information

Model	Input Range
SCM7B21(7)	±10V
SCM7B30-01	0 to +10mV
SCM7B30-02	0 to +100mV
SCM7B30-03	0 to +1V
SCM7B30-05	+1 to +5V
SCM7B30-06	±10mV
SCM7B30-07	±100mV
SCM7B30-08	±1V
SCM7B31-01	0 to +10V
SCM7B31-02	±5V
SCM7B31-03	±10V
SCM7B31-04	0 to +5V
SCM7B31-05	0 to +20V
SCM7B31-06	±20V
SCM7B31-07	0 to +50V
SCM7B31-08	±50V

†Output Ranges Available

Output Range	Part No. Suffix	Example
+1 to +5V	NONE	SCM7B30-01
0 to +5V	A	SCM7B30-01A
0 to +10V	D	SCM7B30-01D

©1995-2017 Dataforth Corporation, All Rights Reserved ISO9001:2008-Registered QMS

SCM7B22

Isolated Bipolar Voltage Output Modules

Description

SCM7B22 voltage output modules accept input signals in the ±10V range from the process control system. The signal is isolated, buffered, and filtered to provide a unity gain field voltage output (Figure 1).

These modules incorporate a five-pole filtering approach to maximize both time and frequency response by taking advantage of both Thomson (Bessel) and Butterworth characteristics. One pole of the filter is on the process control system side of the isolation barrier; four are on the field side.

After the initial process control system-side filtering, the input signal is chopped by a proprietary chopper circuit and transferred across the transformer isolation barrier, suppressing transmission of common mode spikes and surges. The signal is then reconstructed and filtered for field-side output.

Modules accept a wide 19 - 29VDC power supply range (+24VDC nominal). Their compact packages (2.13"x1.705"x0.605" max) save space and are ideal for high channel density applications. They are designed for easy DIN rail mounting using any of the -DIN backpanels.

Features

- Accepts High-Level Input to ±10V
- Provides High-Level Output to ±10V
- 1500Vrms Transformer Isolation
- Accuracy, ±0.03% of Span Typical, ±0.1% Max
- ANSI/IEEE C37.90.1 Transient Protection
- Output Protected to 120Vrms Continuous
- Input Protected to ±35VDC
- Noise, 2mVp-p (5MHz), 1mVrms (100kHz)
- 100dB CMRR
- Easy DIN Rail Mounting
- CSA C/US Certified
- CE and ATEX Compliant

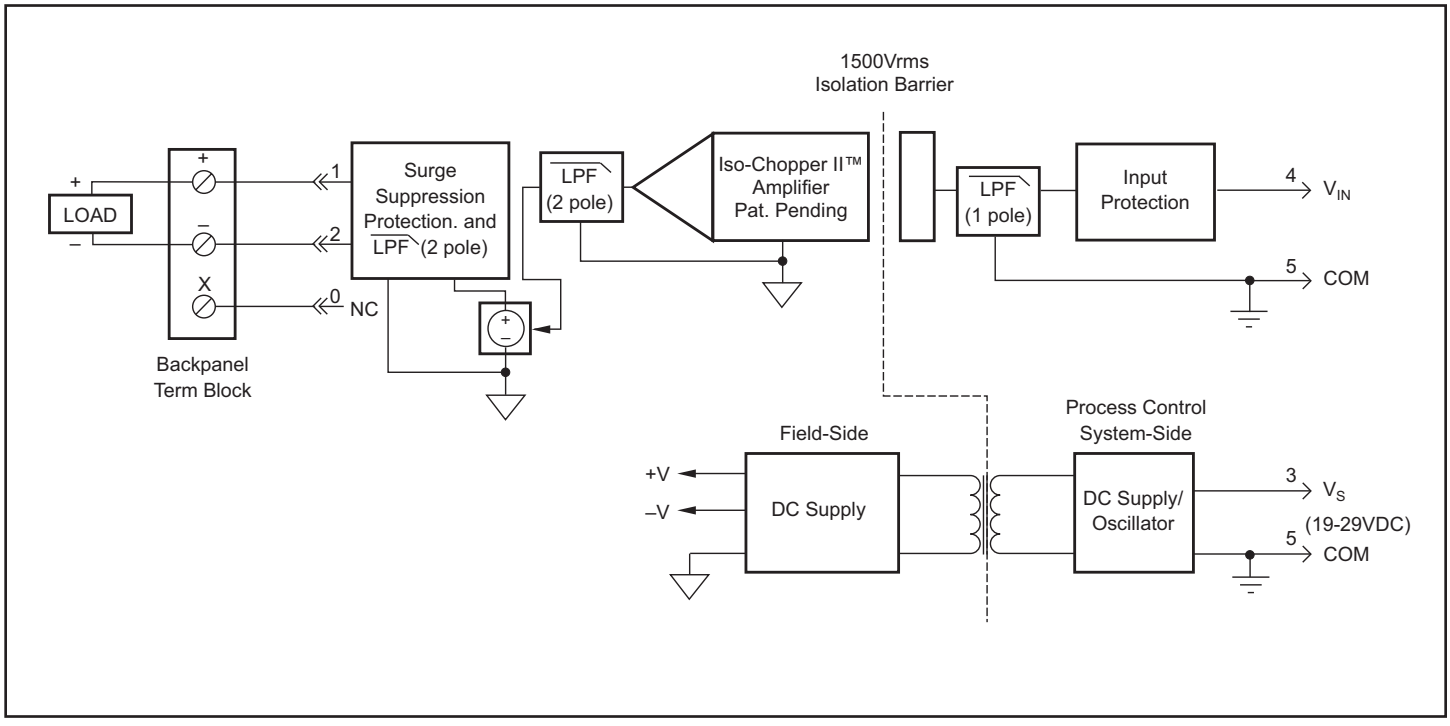

Figure 1: SCM7B22 Block Diagram

©1995-2017 Dataforth Corporation, All Rights Reserved ISO9001:2008-Registered QMS

Specifications Typical* at 25°C and +24VDC

Module	SCM7B22
Output	
Signal Range	±10V
Drive Capability	±20mA
Resistance	<1Ω
Protection	
Continuous	120Vrms
Transient	ANSI/IEEE C37.90.1
Voltage/Current Limit	±12.5V, ±40mA
Input	
Signal Range	±10V
Bias Current	±0.5nA
Resistance	2MΩ min
Protection	±35VDC (no damage)
CMV (Input-to-Output)	
Continuous	1500Vrms
Transient	ANSI/IEEE C37.90.1
CMRR (50 or 60Hz)	100dB
Accuracy(1)	±0.03% Span typical, ±0.1% Span max
Linearity(2)	±0.01% Span typical, ±0.02% Span max
Stability (–40°C to +85°C)	
Gain	±35ppm/°C
Output Offset	±0.001% Span/°C
Noise	
Peak at 5MHz B/W	2mV
RMS at 10Hz to 100kHz B/W	1mV
Peak at 0.1Hz to 10Hz B/W	10µV RTI(3)
Frequency and Time Response	
Bandwidth, –3dB	400Hz
NMR (–3dB at 400Hz)	100dB per Decade above 400Hz
Step Response, 90% Span	1ms
Supply Voltage	19 to 29VDC
Current	16mA
Sensitivity	±0.0001%/%V_S
Mechanical Dimensions (h)(w)(d)	2.13" x 1.705" x 0.605" max (54.1mm x 43.3mm x 15.4mm max)
Environmental	
Operating Temperature Range	–40°C to +85°C
Storage Temperature Range	–40°C to +85°C
Relative Humidity	0 to 95% Noncondensing
Emissions EN61000-6-4	ISM, Group 1
Radiated, Conducted	Class A
Immunity EN61000-6-2	ISM, Group 1
RF	Performance A ±0.5% Span Error
ESD, EFT	Performance B

NOTES:
*Contact factory or your local Dataforth sales office for maximum values.
(1) Accuracy includes the effects of repeatability, hysteresis, and linearity.
(2) Linearity is calculated using the best-fit straight line method.
(3) RTI = Referenced to Input.

Ordering Information

Model	Input Range	Output Range
SCM7B22	±10V	±10V

©1995-2017 Dataforth Corporation, All Rights Reserved ISO9001:2008-Registered QMS

SCM7B32/33

Isolated Process Current/Voltage Input Modules

Description

The SCM7B32 current input modules accept input signals in the 4-20mA or 0-20mA ranges from the field and provide a high-level output to the process control system (Figure 1). Current to voltage conversion occurs internal to the module, which is factory calibrated to ensure the highest accuracy.

SCM7B33 voltage input modules accept input signals in the +1V to +5V or 0 to +5V ranges from the field and provide a high-level output to the process control system. As an alternative, the SCM7B33 can be used with an external 250Ω resistor (Dataforth SCM7BXR1 or equivalent), to accept input signals in the 4-20mA or 0-20mA ranges. Using the external sense resistor allows the module to be removed without disrupting the current loop. All SCM7B33s are shipped with a SCM7BXR1 resistor.

These modules incorporate a five-pole filtering approach to maximize both time and frequency response by taking advantage of both Thomson (Bessel) and Butterworth characteristics. One pole of the filter is on the field side of the isolation barrier; four are on the process control system side.

After the initial field-side filtering (conversion-SCM7B32 only), the input signal is chopped by a proprietary chopper circuit and transferred across the transformer isolation barrier, suppressing transmission of common mode spikes and surges. The signal is then reconstructed and filtered for process control system output.

Modules accept a wide 14 - 35VDC power supply range (+24VDC nominal). Their compact packages (2.13"x1.705"x0.605" max) save space and are ideal for high channel density applications. They are designed for easy DIN rail mounting using any of the -DIN backpanels.

Features

- Accepts Current or Voltage Input
- Provides High-Level Voltage Outputs
- 1500Vrms Transformer Isolation
- Accuracy, ±0.03% of Span Typical, ±0.1% Max
- ANSI/IEEE C37.90.1 Transient Protection
- Input Protected to 120Vrms Continuous
- Noise, 500µVp-p (5MHz), 300µVrms (100kHz)
- 105dB CMRR
- Easy DIN Rail Mounting
- CSA C/US Certified
- CE and ATEX Compliant

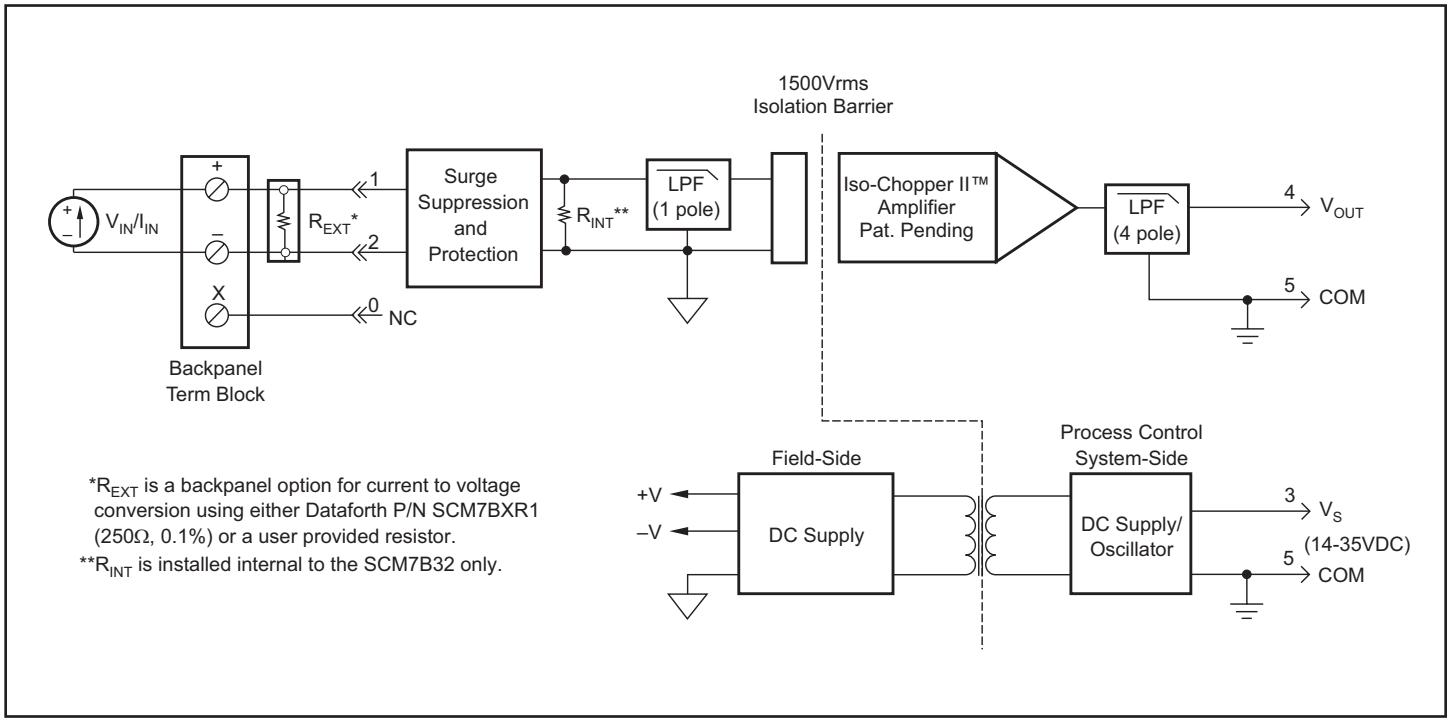

Figure 1: SCM7B32/33 Block Diagram

©1995-2017 Dataforth Corporation, All Rights Reserved ISO9001:2008-Registered QMS

Specifications

Typical* at 25°C and +24VDC

Module	SCM7B32	SCM7B33
Input		
Signal Range	4-20mA, 0-20mA	+1 to +5V, 0 to +5V
Bias Current	N/A	±0.1nA
Resistance		
Normal	<100Ω	2MΩ
Power Off	<100Ω	2MΩ
Overload	30kΩ	2MΩ
Protection		
Continuous	120Vrms max	*
Transient	ANSI/IEEE C37.90.1	*
Output		
Signal Range(1)	†	†
Effective Available Power(1)	40mW	*
Resistance	<1Ω	*
Protection	Continuous Short to Ground	*
Voltage/Current Limit	±12V, ±14mA	*
CMV (Input-to-Output)		
Continuous	1500Vrms	*
Transient	ANSI/IEEE C37.90.1	*
CMRR (50 or 60Hz)	105dB	*
Accuracy(2)	±0.03% Span typical, ±0.1% Span max	*
Linearity(3)	±0.01% Span typical, ±0.02% Span max	*
Stability (–40°C to +85°C)		
Gain	±35ppm/°C	*
Input Offset	N/A(4)	*
Output Offset	±0.003% Span/°C	*
Noise		
Peak at 5MHz B/W	500µV	*
RMS at 10Hz to 100kHz B/W	300µV	*
Peak at 0.1Hz to 10Hz B/W	1µV RTI(5)	*
Frequency and Time Response		
Bandwidth, –3dB	100Hz	*
NMR (–3dB at 100Hz)	80dB per Decade above 100Hz	*
Step Response, 90% Span	5ms	*
Supply Voltage	14 to 35VDC	*
Current(1)	12mA	*
Sensitivity	±0.0001%/%V_S	*
Mechanical Dimensions (h)(w)(d)	2.13" x 1.705" x 0.605" max (54.1mm x 43.3mm x 15.4mm max)	* *
Environmental		
Operating Temperature Range	–40°C to +85°C	*
Storage Temperature Range	–40°C to +85°C	*
Relative Humidity	0 to 95% Noncondensing	*
Emissions EN61000-6-4	ISM, Group 1	*
Radiated, Conducted	Class A	*
Immunity EN61000-6-2	ISM, Group 1	*
RF	Performance A ±0.5% Span Error	*
ESD, EFT	Performance B	*

NOTES:
*Contact factory or your local Dataforth sales office for maximum values.
* Specification same as preceding model
(1) Output Range and Supply Current specifications are based on minimum output load resistance. Minimum output load resistance is calculated by V_{OUT}^2/P_E, where P_E is the output Effective Available Power that guarantees output range, accuracy, and linearity specifications.
(2) Accuracy includes the effects of repeatability, hysteresis, and linearity.
For SCM7B33, does not include SCM7BXR1 accuracy.
(3) Linearity is calculated using the best-fit straight line method.
(4) Input offset term included in output offset specification.
(5) RTI = Referenced to Input.

Ordering Information

Model	Input Range
SCM7B32-01	4 to 20mA
SCM7B32-02	0 to 20mA
SCM7B33-01	+1 to +5V
SCM7B33-02	0 to +5V

†Output Ranges Available

Output Range	Part No. Suffix	Example
+1 to +5V	NONE	SCM7B32-01
0 to +5V	A	SCM7B32-01A
0 to +10V	D	SCM7B32-01D

©1995-2017 Dataforth Corporation, All Rights Reserved ISO9001:2008-Registered QMS

SCM7B34/34N

Isolated Linearized 2- or 3-Wire RTD Input Modules

Description

Each SCM7B34/34N RTD input module accepts a single channel of 100Ω Platinum (α = 0.00385) or 120Ω Nickel (α = 0.00672) RTD input and produces an input voltage in response to a low-level current excitation. The input signal is filtered, isolated, amplified, linearized, and converted to a high-level analog voltage for output to the process control system (Figure 1).

These modules incorporate a five-pole filtering approach to maximize both time and frequency response by taking advantage of both Thomson (Bessel) and Butterworth characteristics. One pole of the filter is on the field side of the isolation barrier; four are on the process control system side.

In response to the low-level current excitation signal, the RTD input signal is chopped by a proprietary chopper circuit and transferred across the transformer isolation barrier, suppressing transmission of common mode spikes and surges. The signal is then reconstructed and filtered for process control system output.

Linearization is achieved by creating a non-linear transfer function through the module itself. This non-linear transfer function is configured at the factory and is designed to be equal and opposite to the specific RTD non-linearity. Lead compensation is achieved by matching two current paths thus cancelling the effects of lead resistance.

Modules accept a wide 14 - 35VDC power supply range (+24VDC nominal). Their compact packages (2.13"x1.705"x0.605" max) save space and are ideal for high channel density applications. They are designed for easy DIN rail mounting using any of the -DIN backpanels.

Features

- Interfaces to 100Ω Platinum or 120Ω Nickel RTDs
- Provides 250µA RTD Excitation Current
- Linearizes RTD Signal Response
- Provides High-Level Voltage Outputs
- 1500Vrms Transformer Isolation
- Accuracy, ±0.05% to ±0.15% of Span Typical
- Nonconformity, ±0.025% to ±0.07% of Span Typical
- ANSI/IEEE C37.90.1 Transient Protection
- Input Protected to 120Vrms Continuous
- Noise, 500µVp-p (5MHz), 250µVrms (100kHz)
- 160dB CMRR
- 85dB NMR at 60Hz, 80dB at 50Hz
- Easy DIN Rail Mounting
- CSA C/US Certified
- CE and ATEX Compliant

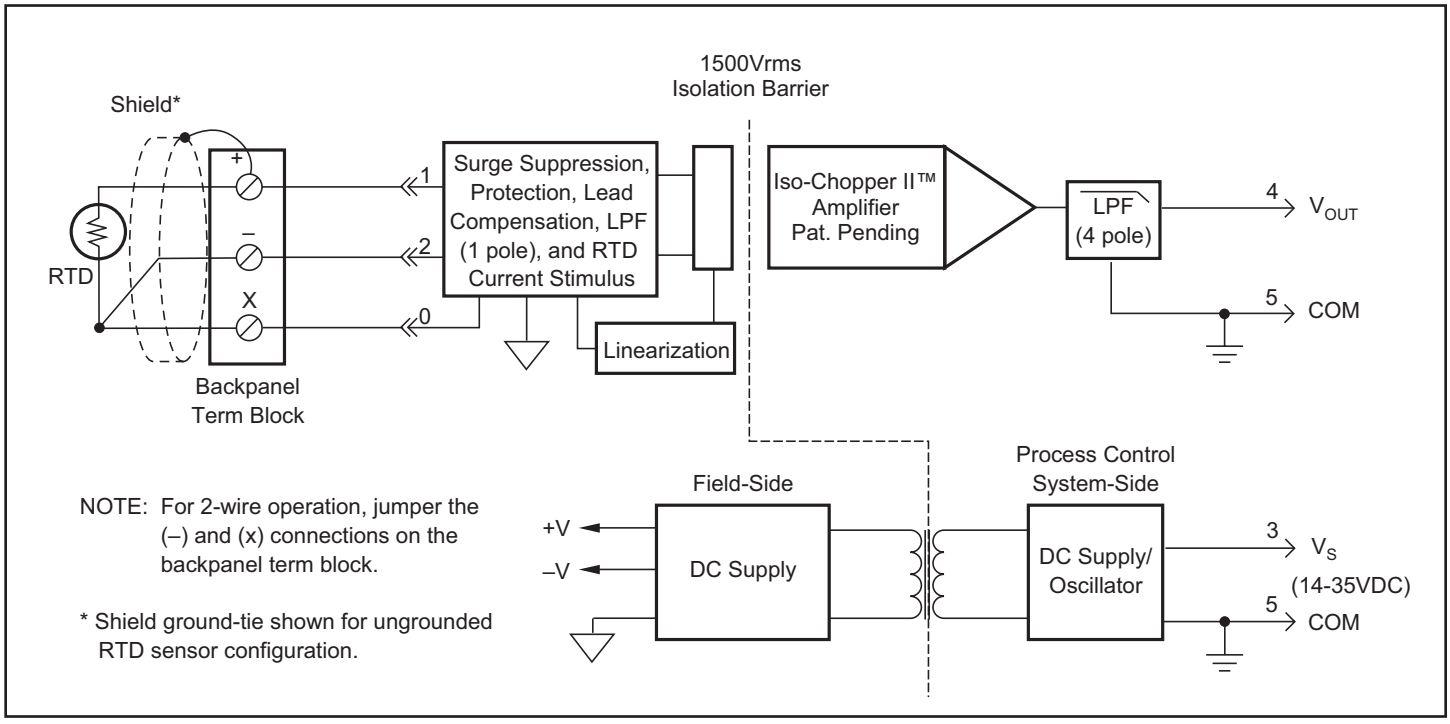

Figure 1: SCM7B34/34N Block Diagram

©1995-2017 Dataforth Corporation, All Rights Reserved ISO9001:2008-Registered QMS

Specifications Typical* at 25°C and +24VDC

Module	SCM7B34	SCM7B34N
Input		
Signal Range	100Ω Pt RTD See Ordering Information	120Ω Ni RTD *
Protection		
Continuous	120Vrms max	*
Transient	ANSI/IEEE C37.90.1	*
Sensor Excitation Current(1)	≈250µA	*
Lead Resistance Effect	±0.02°C/Ω max	*
Output		
Signal Range(2)	†	†
Effective Available Power(2)	40mW	*
Resistance	<1Ω	*
Protection	Continuous Short to Ground	*
Voltage/Current Limit	±12V, ±14mA	*
CMV (Input-to-Output)		
Continuous	1500Vrms	*
Transient	ANSI/IEEE C37.90.1	*
CMRR (50 or 60Hz)	160dB	*
Accuracy(3)	See Ordering Information	*
Nonconformity(4)	See Ordering Information	*
Stability (–40°C to +85°C)		
Gain	±60ppm/°C	*
Input Offset	±1µV/°C	*
Zero Suppression	±0.002%(R_Z/R_{SPAN})(5)/°C	*
Output Offset	±0.002% Span/°C	*
Noise		
Peak at 5MHz B/W	500µV	*
RMS at 10Hz to 100kHz B/W	250µV	*
Peak at 0.1Hz to 10Hz B/W	1µV RTI(6)	*
Open Input Response		
'+' Lead	Upscale	*
'–' Lead	Non-deterministic	*
'x' Lead	Downscale	*
Open Input Detection Time	<5s	*
Frequency and Time Response		
Bandwidth, –3dB	3Hz	*
NMR (50/60Hz)	80/85dB	*
Step Response, 90% Span	250ms	*
Supply Voltage	14 to 35VDC	*
Current(2)	12mA	*
Sensitivity	±0.0001%/%V_S	*
Mechanical Dimensions (h)(w)(d)	2.13" x 1.705" x 0.605" max (54.1mm x 43.3mm x 15.4mm max)	* *
Environmental		
Operating Temperature Range	–40°C to +85°C	*
Storage Temperature Range	–40°C to +85°C	*
Relative Humidity	0 to 95% Noncondensing	*
Emissions EN61000-6-4	ISM, Group 1	*
Radiated, Conducted	Class A	*
Immunity EN61000-6-2	ISM, Group 1	*
RF	Performance A ±0.5% Span Error	*
ESD, EFT	Performance B	*

NOTES:
*Contact factory or your local Dataforth sales office for maximum values.
* Specification same as preceding model.
(1) Sensor excitation current is model dependent.
(2) Output Range and Supply Current specifications are based on minimum output load resistance. Minimum output load resistance is calculated by V_{OUT}^2/P_E, where P_E is the output Effective Available Power that guarantees output range, accuracy, and conformity specifications.
(3) Accuracy includes the effects of repeatability, hysteresis, and conformity.
(4) Nonconformity is calculated using the best-fit straight line method.
(5) R_Z is the value of the RTD resistance at the lowest measurement point. R_{SPAN} is the change in resistance over the measurement span.
(6) RTI = Referenced to Input.

Ordering Information

Model‡	Input Range	Accuracy(2) Typical	Accuracy(2) Max	Nonconformity(3) Typical	Nonconformity(3) Max
100Ω Pt **					
SCM7B34-01	–100°C to +100°C (–148°F to +212°F)	±0.075% (0.15°C)	±0.15% (0.30°C)	±0.025% (0.05°C)	±0.05% (0.10°C)
SCM7B34-02	0°C to +100°C (+32°F to +212°F)	±0.10% (0.10°C)	±0.2% (0.20°C)	±0.025% (0.025°C)	±0.05% (0.05°C)
SCM7B34-03	0°C to +200°C (+32°F to +392°F)	±0.075% (0.15°C)	±0.15% (0.30°C)	±0.025% (0.05°C)	±0.05% (0.10°C)
SCM7B34-04	0°C to +600°C (+32°F to +1112°F)	±0.05% (0.30°C)	±0.1% (0.60°C)	±0.025% (0.15°C)	±0.05% (0.30°C)
SCM7B34-05	–50°C to +350°C (–58°F to +662°F)	±0.05% (0.20°C)	±0.1% (0.40°C)	±0.025% (0.1°C)	±0.05% (0.20°C)
120Ω Ni **					
SCM7B34N-01	0°C to +300°C (+32°F to +572°F)	±0.15% (0.45°C)	±0.3% (0.90°C)	±0.06% (0.18°C)	±0.12% (0.36°C)
SCM7B34N-02	0°C to +200°C (+32°F to +392°F)	±0.15% (0.30°C)	±0.3% (0.60°C)	±0.07% (0.14°C)	±0.14% (0.28°C)

†Output Ranges Available

Output Range	Part No. Suffix	Example
+1 to +5V	NONE	SCM7B34-01
0 to +5V	A	SCM7B34-01A
0 to +10V	D	SCM7B34-01D

**RTD Standards

Type	Alpha Coefficient	DIN	JIS	IEC
100Ω Pt 120Ω Ni	0.00385 0.00672	DIN 43760	JIS C 1604-1989	IEC 751

©1995-2017 Dataforth Corporation, All Rights Reserved ISO9001:2008-Registered QMS

SCM7B35

Isolated 2-Wire Transmitter Interface Modules With Loop Power

Description

SCM7B35 current input modules accept input signals in the 4-20mA range from the field and provide a high-level voltage output to the process control system (Figure 1). Current to voltage conversion occurs internal to the module, which is factory calibrated to ensure the highest accuracy.

Loop power is provided by the module, enabling a 2-wire transmitter to be directly connected without the need for a separate dc power supply for the 2-wire transmitter.

These modules incorporate a five-pole filtering approach to maximize both time and frequency response by taking advantage of both Thomson (Bessel) and Butterworth characteristics. One pole of the filter is on the field side of the isolation barrier; four are on the process control system side.

After the initial field-side filtering, the input signal is chopped by a proprietary chopper circuit and transferred across the transformer isolation barrier, suppressing transmission of common mode spikes and surges. The signal is then reconstructed and filtered for process control system output.

Modules accept a wide 18 - 35VDC power supply range (+24VDC nominal). Their compact packages (2.13"x1.705"x0.605" max) save space and are ideal for high channel density applications. They are designed for easy DIN rail mounting using any of the -DIN backpanels.

Features

- 2-Wire Transmitter Interface
- Accepts 4-20mA Signals
- Provides an Isolated +24VDC Supply to Power the Loop
- Provides High-Level Voltage Outputs
- 1500Vrms Transformer Isolation
- Accuracy, ±0.03% of Span Typical, ±0.1% Max
- ANSI/IEEE C37.90.1 Transient Protection
- 120Vrms Input Protection
- 105dB CMRR
- Easy DIN Rail Mounting
- CSA C/US Certified
- CE and ATEX Compliant

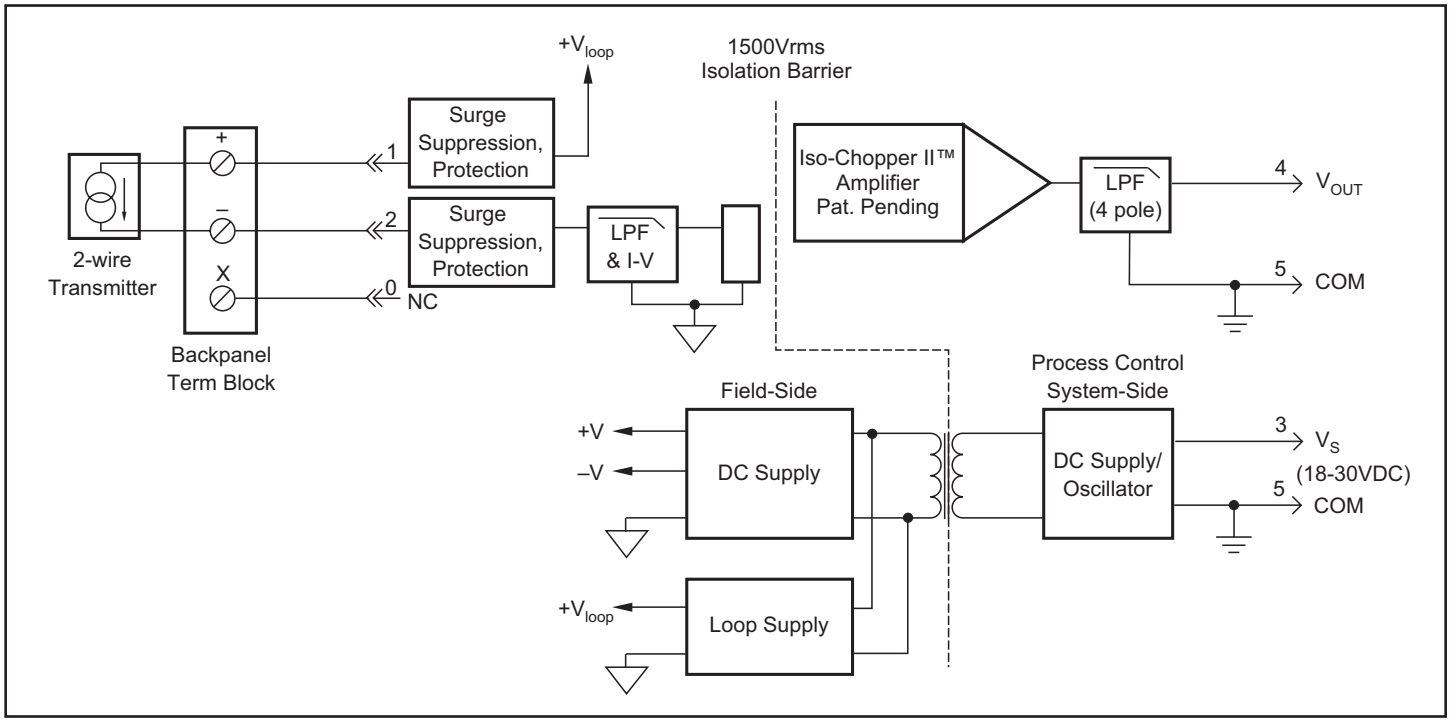

Figure 1: SCM7B35 Block Diagram

©1995-2017 Dataforth Corporation, All Rights Reserved ISO9001:2008-Registered QMS

Specifications Typical* at 25°C and +24VDC

Module	SCM7B35
Input	
Signal Range	4-20mA
Protection	
Continuous	120Vrms max
Transient	ANSI/IEEE C37.90.1
Loop Voltage(1)	+24VDC
Output	
Signal Range(2)	See Ordering Information
Effective Available Power(2)	40mW
Resistance	<1Ω
Protection	Continuous Short to Ground
Voltage/Current Limit	±16V, ±14mA
CMV (Input-to-Output)	
Continuous	1500Vrms
Transient	ANSI/IEEE C37.90.1
CMRR (50 or 60Hz)	105dB
Accuracy(3)	±0.03% Span typical, ±0.1% Span max
Linearity(4)	±0.01% Span typical, ±0.02% Span max
Stability (–40°C to +85°C)	
Gain	±40ppm/°C
Input Offset	N/A(5)
Output Offset	±0.003% Span/°C
Noise	
Peak at 5MHz B/W	5mV
RMS at 10Hz to 100kHz B/W	500µV
Peak at 0.1Hz to 10Hz B/W	3µV RTI(6)
Frequency and Time Response	
Bandwidth, –3dB	100Hz
NMR (–3dB at 100Hz)	80dB per Decade above 100Hz
Step Response, 90% Span	5ms
Supply Voltage	18 to 30VDC
Current(2)	56mA
Sensitivity	±0.0002%/%V_S
Mechanical Dimensions (h)(w)(d)	2.13" x 1.705" x 0.605" max (54.1mm x 43.3mm x 15.4mm max)
Environmental	
Operating Temperature Range	–40°C to +85°C
Storage Temperature Range	–40°C to +85°C
Relative Humidity	0 to 95% Noncondensing
Emissions EN61000-6-4	ISM, Group 1
Radiated, Conducted	Class A
Immunity EN61000-6-2	ISM, Group 1
RF	Performance A ±0.5% Span Error
ESD, EFT	Performance B

NOTES:
*Contact factory or your local Dataforth sales office for maximum values.
(1) +24V will be supplied to the loop for an open loop condition. Approximately +22V to +16V will be supplied for a corresponding 4mA to 20mA input. Loop voltage is independent of supply voltage.
(2) Output Range and Supply Current specifications are based on minimum output load resistance. Minimum output load resistance is calculated by V_{OUT}^2/P_E, where P_E is the Output Effective Available Power that guarantees output range, accuracy, and linearity specifications.
(3) Accuracy includes the effects of repeatability, hysteresis, and linearity.
(4) Linearity is calculated using the best-fit straight line method.
(5) Input offset term included in output offset specification.
(6) RTI = Referenced to Input.

Ordering Information

Model	Input Range	Output Range
SCM7B35-01	4 to 20mA	+1 to +5V
SCM7B35-01A	4 to 20mA	0 to +5V
SCM7B35-01D	4 to 20mA	0 to +10V
SCM7B35-02	4 to 20mA	+2 to +10V

©1995-2017 Dataforth Corporation, All Rights Reserved ISO9001:2008-Registered QMS

SCM7B36

Isolated Potentiometer Input Modules

Description

Each SCM7B36 Potentiometer input module provides a single channel of resistance input which is filtered, isolated, amplified, and converted to a high level analog voltage output (Figure 1).

The SCM7B36 module interfaces to slidewires and potentiometers in both two or three wire configuration and incorporates a five-pole filtering approach to maximize both time and frequency response by taking advantage of both Bessel and Butterworth characteristics. One pole of the filter is on the field side of the isolation barrier; four are on the process control system side. In the 3-Wire configuration, lead resistance compensation is provided if the resistance of the "x" lead is closely equivalent to that of the "+" lead. Internal to the module, measurement error due to lead resistance is canceled.

In response to the low-level current excitation, and after initial field-side filtering, the input signal is chopped by a proprietary chopper circuit and transferred across the transformer isolation barrier, suppressing transmission of common mode spikes and surges. The signal is then reconstructed and filtered for process control system output.

Six standard input resistance ranges are offered, from 100Ω to 10kΩ, with three output ranges available: 0-5V, 1-5V, and 0-10V. Modules accept a wide 14- 35VDC power supply range (+24VDC nominal). Their compact packages (2.13" x 1.705" x 0.605" max.) save space and are ideal for high channel density applications. They are designed for easy DIN rail mounting using any of the -DIN backpanels.

Features

- Industry's First 7B Potentiometer Input Module
- Interfaces 100Ω to 10kΩ Potentiometers
- Provides High-Level Voltage Outputs
- 1500Vrms Transformer Isolation
- Accuracy, ±0.03% of Span Typical, ±0.1% Max
- ANSI/IEEE C37.90.1 Transient Protection
- Input Protected to 120Vrms Continuous
- 120dB CMRR
- 85dB NMR at 60Hz, 80dB at 50Hz
- Easy DIN Rail Mounting
- CSA C/US Certified
- CE and ATEX Compliant

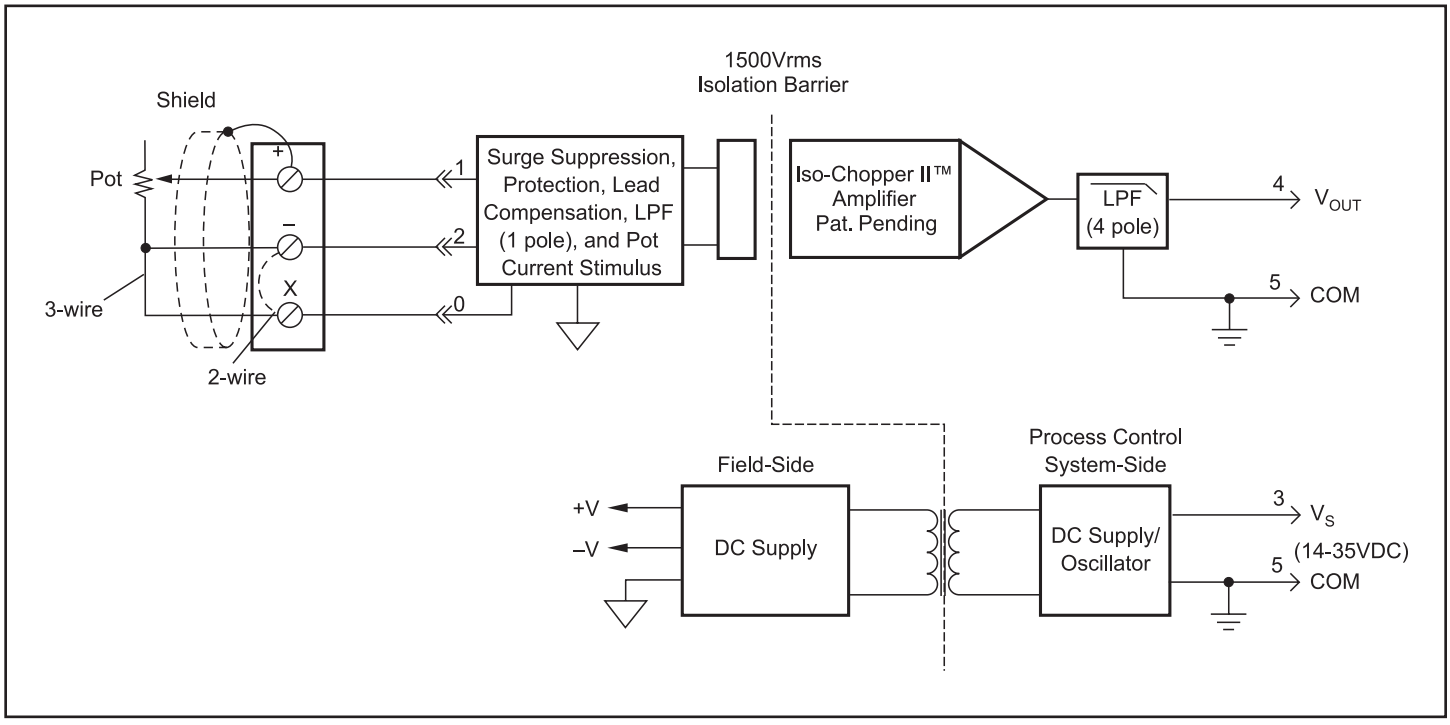

Figure 1: SCM7B36 Block Diagram

©1995-2017 Dataforth Corporation, All Rights Reserved ISO9001:2008-Registered QMS

Specifications Typical* at 25°C and +24VDC

Module	SCM7B36
Input Range	(See Ordering Information)
Protection	
Continuous	120Vrms max
Transient	ANSI/IEEE C37.90.1
Sensor Excitation Current	65µA (10kΩ) to 260µA (100Ω)
Lead Resistance Effect (3-Wire)(1)	
-01 thru -04	: ±0.005Ω/
-05	: ±0.02Ω/Ω
-06	: ±0.04Ω/Ω
Output Range(2)	
(See Output Range)	†
Effective Available Power(2)	40mW
Resistance	< 1Ω
Protection	Continuous Short to Ground
Voltage/Current Limit	±12V, ±14mA
CMV (Input to Output)	
Continuous	1500Vrms
Transient	ANSI/IEEE C37.90.1
CMRR (50 or 60Hz)	120dB
Accuracy(3)	±0.03% Span typical, ±0.1% Span max
Linearity(4)	±0.01% Span typical, ±0.02% Span max
Stability (–40°C to +85°C)	
Input Offset	±0.01Ω/°C
Output Offset	±30µV/°C
Gain	±60ppm/°C
Noise Peak at 5MHz B/W	1mV
RMS at 10Hz to 100kHz B/W	250µV
Peak at 0.1Hz to 10Hz B/W	1µV RTI(5)
Open Input Response	
'+' Lead	Upscale
'–' Lead	Non-deterministic
'x' Lead	Downscale
Open Input Detection Time	<5s
Frequency and Time Response	
Bandwidth, –3dB	3Hz
NMR (50/60Hz)	80/85dB
Step Response, 0 to 90%	250ms
Supply Voltage	14-35VDC
Current(2)	12mA
Sensitivity	±0.0001%/%V_S
Mechanical Dimensions (h)(w)(d)	2.13" x 1.705" x 0.605", max (54.1mm x 43.3mm x 15.4mm max)
Environmental	
Operating Temperature Range	–40°C to +85°C
Storage Temperature Range	–40°C to +85°C
Relative Humidity	0 to 95% Noncondensing
Emissions EN61000-6-4	ISM, Group 1
Radiated, Conducted	Class A
Immunity EN61000-6-2	ISM, Group 1
RF	Performance A ±0.5% Span Error
ESD, EFT	Performance B

NOTES:
*Contact factory or your local Dataforth sales office for maximum values.
(1) Lead resistance effect is given for the condition of not having the NTC thermistor installed in the backpanel. As a general rule, as long as the lead resistance of the (+) lead matches the parallel combination of the thermistor and lead resistance in the (X) lead, the given specifications apply.
(2) Output Range and Supply Current specifications are based on minimum output load resistance. Minimum output load resistance is calculated by V_{OUT}^2/P_E, where P_E is the output Effective Available Power that guarantees output range and accuracy specifications.
(3) Accuracy includes the effects of repeatability, hysteresis, and linearity, but does not include sensor accuracy.
(4) Linearity is calculated using the best-fit straight line method.
(5) RTI = Referenced to Input.

Ordering Information

Model	Input Range
SCM7B36-01	0 to 100Ω
SCM7B36-02	0 to 200Ω
SCM7B36-03	0 to 500Ω
SCM7B36-04	0 to 1kΩ
SCM7B36-05	0 to 5kΩ
SCM7B36-06	0 to 10kΩ

†Output Ranges Available

Output Range	Part No. Suffix	Example
+1 to +5V	NONE	SCM7B36-01
0 to +5V	A	SCM7B36-01A
0 to +10V	D	SCM7B36-01D

©1995-2017 Dataforth Corporation, All Rights Reserved ISO9001:2008-Registered QMS

SCM7B37

Non-Linearized Isolated Thermocouple Input Modules

Description

SCM7B37 non-linearized modules accept a single channel of input from Type J, K, T, E, R, S, or B thermocouples. The signal is filtered, isolated, amplified, and converted to a high-level analog voltage for output to the process control system (Figure 1).

Cold junction compensation (CJC) is performed using an NTC thermistor (see "Additional SCM7B Part Numbers" section for P/N and AN701 for further information) externally mounted under the field-side terminal block on the backpanel (Figure 1). Open thermocouple detection is upscale using a 30nA current source in the input circuitry.

These modules incorporate a five-pole filtering approach to maximize both time and frequency response by taking advantage of both Thomson (Bessel) and Butterworth characteristics. One pole of the filter is on the field side of the isolation barrier; four are on the process control system side.

After the initial field-side filtering, the input signal is chopped by a proprietary chopper circuit and transferred across the transformer isolation barrier, suppressing transmission of common mode spikes and surges. The signal is then reconstructed and filtered for process control system output.

Modules accept a wide 14 - 35VDC power supply range (+24VDC nominal). Their compact packages (2.13"x1.705"x0.605" max) save space and are ideal for high channel density applications. They are designed for easy DIN rail mounting using any of the -DIN backpanels.

Features

- Interfaces to Type J, K, T, E, R, S, and B Thermocouples
- Provides High-Level Voltage Outputs
- 1500Vrms Transformer Isolation
- Accuracy, ±0.03% of Span Typical, ±0.1% Max
- ANSI/IEEE C37.90.1 Transient Protection
- Input Protected to 120Vrms Continuous
- Noise, 500µVp-p (5MHz), 250µVrms (100kHz)
- 160dB CMRR
- 85dB NMR at 60Hz, 80dB at 50Hz
- Easy DIN Rail Mounting
- CSA C/US Certified
- CE and ATEX Compliant

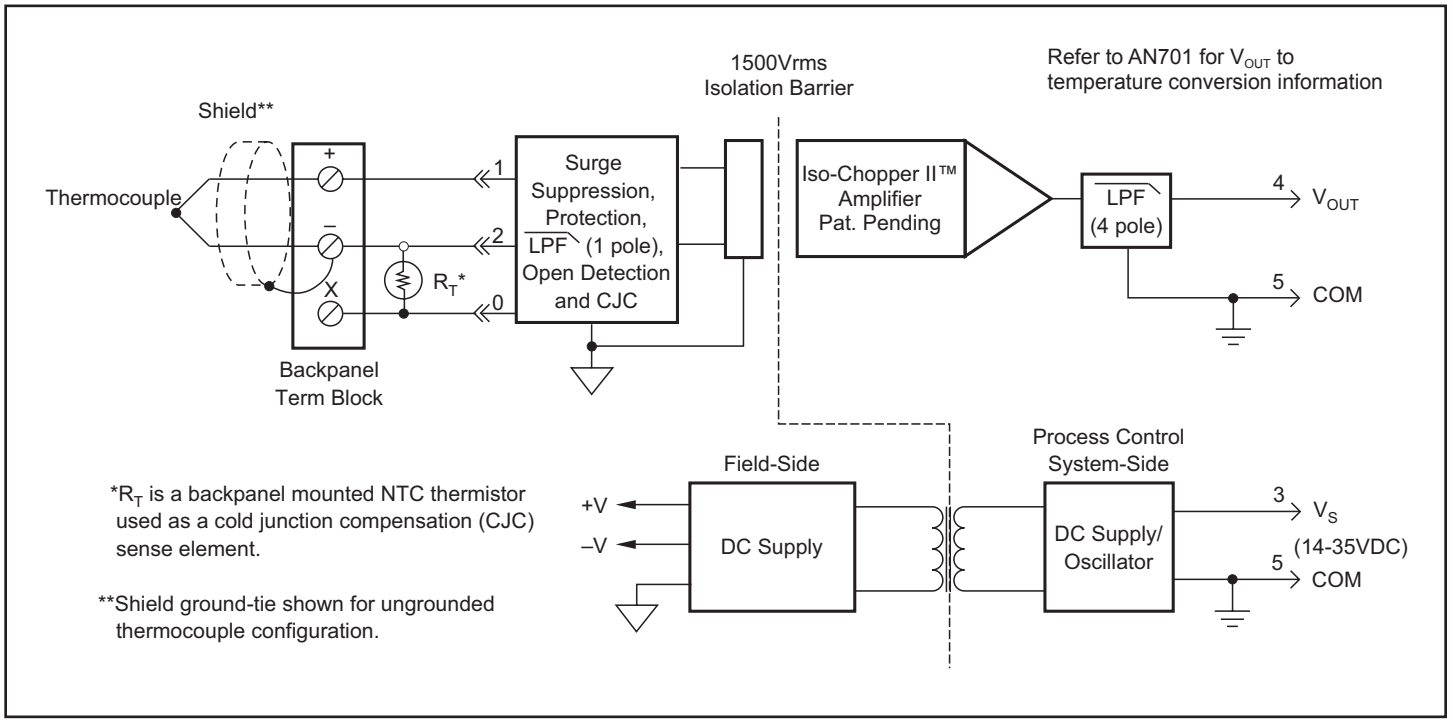

Figure 1: SCM7B37 Block Diagram

©1995-2017 Dataforth Corporation, All Rights Reserved ISO9001:2008-Registered QMS

Specifications Typical* at 25°C and +24VDC

Module	SCM7B37
Input	
Signal Range	Thermocouple(1) (See Ordering Information)
Bias Current	–30nA
Resistance	
Normal	50MΩ
Power Off	30kΩ min
Overload	30kΩ min
Protection	
Continuous	120Vrms max
Transient	ANSI/IEEE C37.90.1
Output	
Signal Range(2)	†
Effective Available Power(2)	40mW
Resistance	<1Ω
Protection	Continuous Short to Ground
Voltage/Current Limit	±12V, ±14mA
CMV (Input-to-Output)	
Continuous	1500Vrms
Transient	ANSI/IEEE C37.90.1
CMRR (50 or 60Hz)	160dB
Accuracy(3)	±0.03% Span typical, ±0.1% Span max
Linearity(4)	See Ordering Information
Stability (–40°C to +85°C)	
Gain	±35ppm/°C
Input Offset	±0.5µV/°C
Zero Suppression	±0.005%(V_z)(5)/°C
Output Offset	±0.002% Span/°C
Noise	
Peak at 5MHz B/W	500µV
RMS at 10Hz to 100kHz B/W	250µV
Peak at 0.1Hz to 10Hz B/W	1µV RTI(6)
CJC Accuracy(7), +5°C to +45°C ambient	±0.25°C typ, ±1°C max
Open Input Response	Upscale
Open Input Detection Time	<10s
Frequency and Time Response	
Bandwidth, –3dB	3Hz
NMR (50/60Hz)	80/85dB
Step Response, 90% Span	165ms
Supply Voltage	14 to 35VDC
Current(2)	12mA
Sensitivity	±0.0001%/%V_8
Mechanical Dimensions (h)(w)(d)	2.13" x 1.705" x 0.605" max (54.1mm x 43.3mm x 15.4mm max)
Environmental	
Operating Temperature Range	–40°C to +85°C
Storage Temperature Range	–40°C to +85°C
Relative Humidity	0 to 95% Noncondensing
Emissions EN61000-6-4	ISM, Group 1
Radiated, Conducted	Class A
Immunity EN61000-6-2	ISM, Group 1
RF	Performance A ±0.5% Span Error
ESD, EFT	Performance B

NOTES:
*Contact factory or your local Dataforth sales office for maximum values.
(1) Thermocouple characteristics per NIST monograph 175, ITS-90.
(2) Output Range and Supply Current specifications are based on minimum output load resistance. Minimum output load resistance is calculated by V_{OUT}^2/P_E, where P_E is the output Effective Available Power that guarantees output range, accuracy, and linearity specifications.
(3) Accuracy includes the effects of repeatability, hysteresis, and linearity.
(4) Linearity is calculated using the best-fit straight line method.
(5) V_Z is the nominal input voltage that results in a 0V output.
(6) RTI = Referenced to Input
(7) The CJC sensor accuracy should be added to the module accuracy and thermocouple accuracy to compute the overall measurement accuracy.

Ordering Information

Model‡	Input Range	Accuracy(3) Typical	Accuracy(3) Max	Linearity(4) Typical	Linearity(4) Max
SCM7B37J-01	100°C to +760°C (–148°F to +1400°F)	±0.03% (0.26°C)	±0.1% (0.86°C)	±0.01% (0.09°C)	±0.02% (0.17°C)
SCM7B37J-10	0°C to +200°C (+32°F to +392°F)	±0.03% (0.06°C)	±0.1% (0.20°C)	±0.01% (0.02°C)	±0.02% (0.04°C)
SCM7B37J-11	0°C to +400°C (+32°F to +752°F)	±0.03% (0.12°C)	±0.1% (0.40°C)	±0.01% (0.04°C)	±0.02% (0.08°C)
SCM7B37J-12	0°C to +600°C (+32°F to +1112°F)	±0.03% (0.18°C)	±0.1% (0.60°C)	±0.01% (0.06°C)	±0.02% (0.12°C)
SCM7B37J-13	300°C to +600°C (572°F to +1112°F)	±0.03% (0.09°C)	±0.1% (0.30°C)	±0.01% (0.03°C)	±0.02% (0.24°C)
SCM7B37K-02	–100°C to +1350°C (–148°F to +2462°F)	±0.03% (0.44°C)	±0.1% (1.45°C)	±0.01% (0.15°C)	±0.02% (0.29°C)
SCM7B37K-20	0°C to +300°C (+32°F to +572°F)	±0.03% (0.09°C)	±0.1% (0.30°C)	±0.01% (0.03°C)	±0.02% (0.06°C)
SCM7B37K-21	0°C to +600°C (+32°F to +1112°F)	±0.03% (0.18°C)	±0.1% (0.60°C)	±0.01% (0.06°C)	±0.02% (0.12°C)
SCM7B37K-22	0°C to +1200°C (+32°F to +2192°F)	±0.03% (0.36°C)	±0.1% (1.20°C)	±0.01% (0.12°C)	±0.02% (0.24°C)
SCM7B37K-23	600°C to +1200°C (+1112°F to +2192°F)	±0.03% (0.18°C)	±0.1% (0.60°C)	±0.01% (0.06°C)	±0.02% (0.12°C)
SCM7B37T-03	–100°C to +400°C (–148°F to +752°F)	±0.03% (0.15°C)	±0.1% (0.50°C)	±0.01% (0.05°C)	±0.02% (0.10°C)
SCM7B37E-04	0°C to +900°C (+32°F to +1652°F)	±0.03% (0.27°C)	±0.1% (0.90°C)	±0.01% (0.09°C)	±0.02% (0.18°C)
SCM7B37R-05	0°C to +1750°C (+32°F to +3182°F)	±0.03% (0.53°C)	±0.1% (1.75°C)	±0.01% (0.18°C)	±0.02% (0.35°C)
SCM7B37S-06	0°C to +1750°C (+32°F to +3182°F)	±0.03% (0.53°C)	±0.1% (1.75°C)	±0.01% (0.18°C)	±0.02% (0.35°C)
SCM7B37B-07	0°C to +1800°C (+32°F to +3272°F)	±0.03% (0.54°C)	±0.1% (1.80°C)	±0.01% (0.18°C)	±0.02% (0.36°C)

†Output Ranges Available

Output Range	Part No. Suffix	Example
+1 to +5V	NONE	SCM7B37J-01
0 to +5V	A	SCM7B37J-01A
0 to +10V	D	SCM7B37J-01D

‡Thermocouple Alloy Combinations

Standards: DIN IEC 584, ANSI MC96-1-82, JIS C 1602-1981

Type	Material
J	Iron vs. Copper-Nickel
K	Nickel-Chromium vs. Nickel-Aluminum
T	Copper vs. Copper-Nickel
E	Nickel-Chromium vs. Copper-Nickel
R	Platinum-13% Rhodium vs. Platinum
S	Platinum-10% Rhodium vs. Platinum
B	Platinum-30% Rhodium vs. Platinum-6% Rhodium

©1995-2017 Dataforth Corporation, All Rights Reserved ISO9001:2008-Registered QMS

SCM7B39

Isolated Process Current Output Modules

Description

SCM7B39 process current modules accept high-level signals from the process control system and provide either 0 to 20mA or 4 to 20mA current to the field (Figure 1).

These modules incorporate a five-pole filtering approach to maximize both time and frequency response by taking advantage of both Thomson (Bessel) and Butterworth characteristics. One pole of the filter is on the process control system side of the isolation barrier, and the other four poles are on the field side.

After the initial process control system side filtering, the signal is chopped by a proprietary chopper circuit and transferred across the transformer isolation barrier, suppressing transmission of common mode spikes and surges. The signal is then reconstructed, filtered, and converted to a process current for output to the field.

Modules accept a wide 18 - 35VDC power supply range (+24VDC nominal). Their compact packages (2.13"x1.705"x0.605" max) save space and are ideal for high channel density applications. They are designed for easy DIN rail mounting using any of the -DIN backpanels.

Features

- Accepts High-Level Voltage Input
- Provides 4-20mA or 0-20mA Current Output
- 1500Vrms Transformer Isolation
- Accuracy, ±0.03% of Span Typical, ±0.1% Max
- ANSI/IEEE C37.90.1 Transient Protection
- Output Protected to 120Vrms Continuous
- Noise, 46µAp-p (5MHz), 4µArms (100kHz)
- 110dB CMRR
- Easy DIN Rail Mounting
- CSA C/US Certified
- CE and ATEX Compliant

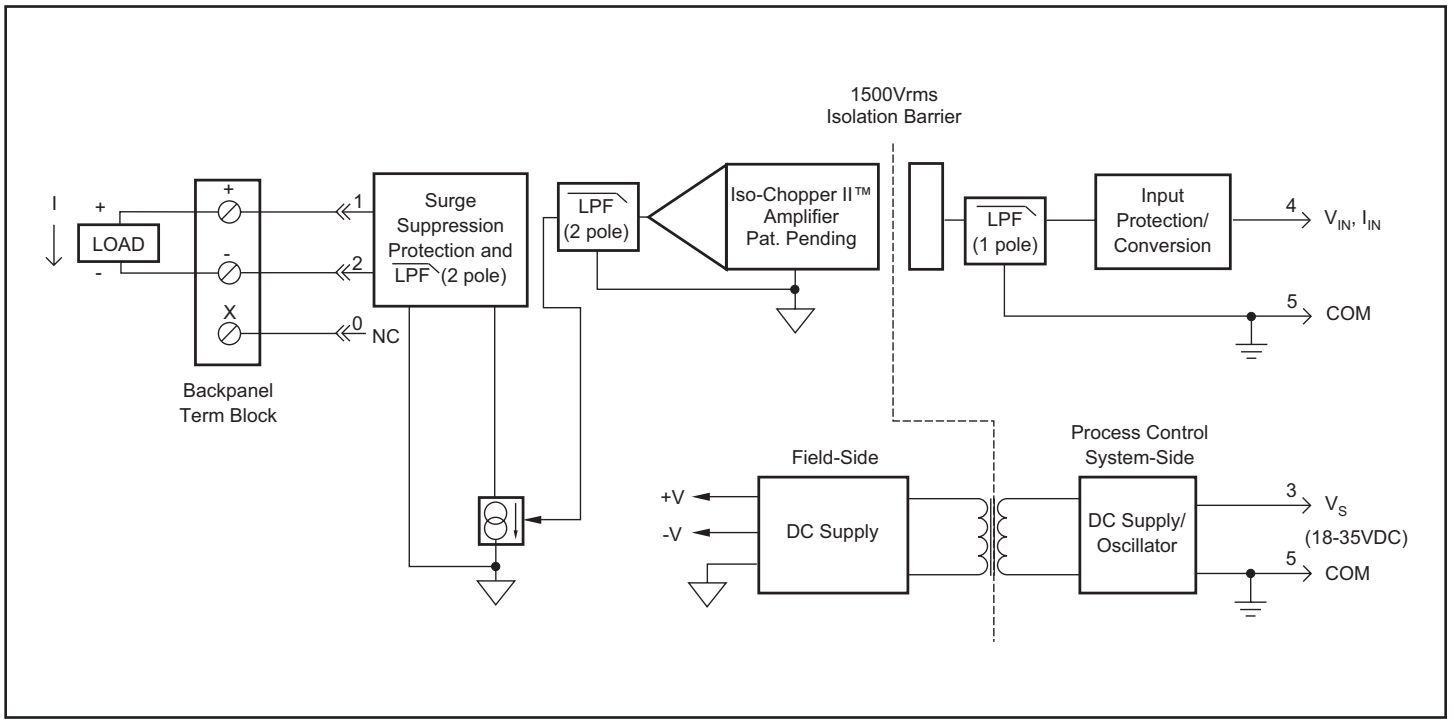

Figure 1: SCM7B39 Block Diagram

©1995-2017 Dataforth Corporation, All Rights Reserved ISO9001:2008-Registered QMS

Specifications Typical* at 25°C and +24VDC

Module	SCM7B39-01,-02,-03	SCM7B39-04
Output		
Signal Range(1)	4-20mA, 0-20mA	4-20mA
Effective Available Power(1)	320mW	*
Protection		
Continuous	120Vrms max	*
Transient	ANSI/IEEE C37.90.1	*
Current Limit	32mA	*
Input		
Signal Range	1 to +5V, 0 to +10V	4-20mA
Bias Current	±1nA	N/A
Resistance		
Normal	10MΩ	270Ω
Power Off	30kΩ min	>20kΩ
Overload	30kΩ min	N/A
Protection	±35Vpeak (no damage)	±7.5Vpeak
Compliance	N/A	35VDC max
CMV (Input-to-Output)		
Continuous	1500Vrms	*
Transient	ANSI/IEEE C37.90.1	*
CMRR (50 or 60Hz)	110dB	*
Accuracy(2)	±0.03% Span typical, ±0.1% Span max	*
Linearity(3)	±0.01% Span typical, ±0.02% Span max	*
Stability (–40°C to +85°C)		
Gain	±25ppm/°C	±50ppm/°C
Output Offset	±0.0035% Span/°C	±0.0045% Span/°C
Noise		
Peak at 5MHz B/W	46µA	*
RMS at 10Hz to 100kHz B/W	4µA	*
Peak at 0.1Hz to 10Hz B/W	42nA	*
Open Output Loop Detection		
Response	N/A	Input Resistance > 20kΩ
Detection Time	N/A	5ms
Frequency and Time Response		
Bandwidth, –3dB	100Hz	*
NMR (–3dB at 100Hz)	80dB per Decade above 100Hz	*
Step Response, 90% Span	5ms	*
Supply Voltage	18 to 35VDC	*
Current(1)	56mA	*
Sensitivity	±0.0003%/%V_S	*
Mechanical Dimensions (h)(w)(d)	2.13" x 1.705" x 0.605" max (54.1mm x 43.3mm x 15.4mm max)	* *
Environmental		
Operating Temperature Range	–40°C to +85°C	*
Storage Temperature Range	–40°C to +85°C	*
Relative Humidity	0 to 95% Noncondensing	*
Emissions EN61000-6-4	ISM, Group 1	*
Radiated, Conducted	Class A	*
Immunity EN61000-6-2	ISM, Group 1	*
RF	Performance A ±0.5% Span Error	*
ESD, EFT	Performance B	*

NOTES:
*Contact factory or your local Dataforth sales office for maximum values.
* Same specification as SCM7B39-01, -02, -03.
(1) Output Range and Supply Current specifications are based on maximum output load resistance. Maximum output load resistance is calculated by P_E/I_{OUT}^2 where P_E is the Output Effective Available Power that guarantees output range, accuracy, and linearity specifications. Output effective available power is independent of supply voltage.
(2) Accuracy includes the effects of repeatability, hysteresis, and linearity.
(3) Linearity is calculated using the best-fit straight line method.

Ordering Information

Model	Input Range	Output Range
SCM7B39-01	+1 to +5V	4 to 20mA
SCM7B39-02	0 to +10V	0 to 20mA
SCM7B39-03	0 to +10V	4 to 20mA
SCM7B39-04	4 to 20mA	4 to 20mA

©1995-2017 Dataforth Corporation, All Rights Reserved ISO9001:2008-Registered QMS

SCM7B40/41

Isolated Analog Voltage Input Modules, Wide Bandwidth

Description

Each SCM7B40/41 voltage input module accepts one channel of analog voltage input which is filtered, isolated, amplified, and converted to a high-level analog voltage for output to the process control system (Figure 1).

These modules incorporate a five-pole filtering approach to maximize both time and frequency response by taking advantage of both Thomson (Bessel) and Butterworth characteristics. One pole of the filter is on the field side of the isolation barrier; four are on the process control system side.

After the initial field-side filtering, the input signal is chopped by a proprietary chopper circuit and transferred across the transformer isolation barrier, suppressing transmission of common mode spikes and surges. The signal is thenreconstructed and filtered for process control system output.

Modules accept a wide 14 - 35VDC power supply range (+24VDC nominal). Their compact packages (2.13"x1.705"x0.605" max) save space and are ideal for high channel density applications. They are designed for easy DIN rail mounting using any of the -DIN backpanels.

Features

- Accepts Millivolt or Voltage Inputs
- Provides High-Level Voltage Outputs
- 10kHz Bandwidth
- 1500Vrms Transformer Isolation
- Accuracy, ±0.03% of Span Typical, ±0.1% Max
- ANSI/IEEE C37.90.1 Transient Protection
- Input Protected to 120Vrms Continuous
- Noise, 2mVp-p (5MHz), 1mVrms (100kHz)
- Up to 110dB CMRR
- Easy DIN Rail Mounting
- CSA C/US Certified
- CE and ATEX Compliant

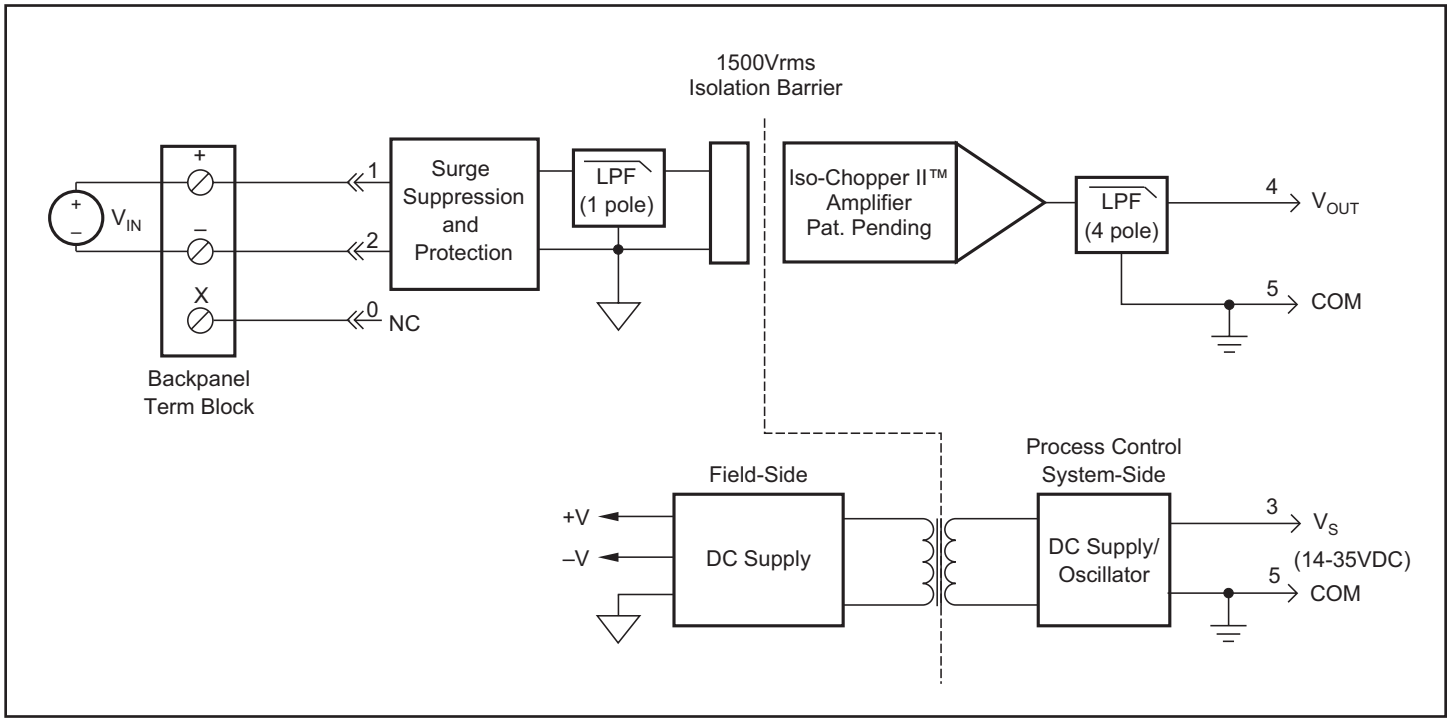

Figure 1: SCM7B40/41 Block Diagram

©1995-2017 Dataforth Corporation, All Rights Reserved ISO9001:2008-Registered QMS

Specifications Typical* at 25°C and +24VDC

Module	SCM7B40	SCM7B41
Input		
Signal Range	–1V to +1V	–10V to +40V
Bias Current	±1nA	±0.1nA
Resistance		
Normal	50MΩ	500kΩ min
Power Off	30kΩ min	500kΩ min
Overload	30kΩ min	500kΩ min
Protection		
Continuous	120Vrms max	*
Transient	ANSI/IEEE C37.90.1	*
Output		
Signal Range(1)	†	†
Effective Available Power(1)	40mW	*
Resistance	<1Ω	*
Protection	Continuous Short to Ground	*
Voltage/Current Limit	±12V, ±14mA	*
CMV (Input-to-Output)		
Continuous	1500Vrms	*
Transient	ANSI/IEEE C37.90.1	*
CMRR (50 or 60Hz)	110dB	110dB
Accuracy(2)	±0.03% Span typical, ±0.1% Span max	*
Linearity(3)	±0.01% Span typical, ±0.02% Span max	*
Stability (–40°C to +85°C)		
Gain	±35ppm/°C	±55ppm/°C
Input Offset	±0.5µV/°C	±5µV/°C
Zero Suppression	±0.005%(V_z)(4)/°C	*
Output Offset	±0.002% Span/°C	*
Noise		
Peak at 5MHz B/W	2mV	*
RMS at 10Hz to 100kHz B/W	1mV	*
Peak at 0.1Hz to10Hz B/W	1µV RTI(5)	*
Frequency and Time Response		
Bandwidth, –3dB	10kHz	*
NMR	80dB per Decade above10kHz	*
Step Response, 90% Span	50µs	*
Supply Voltage	14 to 35VDC	*
Current(1)	12mA	*
Sensitivity	±0.0001%/%V_S	*
Mechanical Dimensions (h)(w)(d)	2.13" x 1.705" x 0.605" max (54.1mm x 43.3mm x 15.4mm max)	* *
Environmental		
Operating Temperature Range	–40°C to +85°C	*
Storage Temperature Range	–40°C to +85°C	*
Relative Humidity	0 to 95% Noncondensing	*
Emissions EN61000-6-4	ISM, Group 1	*
Radiated, Conducted	Class A	*
Immunity EN61000-6-2	ISM, Group 1	*
RF	Performance A ±0.5% Span Error	*
ESD, EFT	Performance B	*

NOTES:
*Contact factory or your local Dataforth sales office for maximum values.
* Specification same as preceding model.
(1) Output Range and Supply Current specifications are based on minimum output load resistance. Minimum output load resistance is calculated by V_{OUT}^2/P_E, where P_E is the Output Effective Available Power that guarantees output range, accuracy, and linearity specifications.
(2) Accuracy includes the effects of repeatability, hysteresis, and linearity.
(3) Linearity is calculated using the best-fit straight line method.
(4) V_Z is the nominal input voltage that results in a 0V output.
(5) RTI = Referenced to Input.

Ordering Information

Model	Input Range
SCM7B40-02	0 to +100mV
SCM7B40-03	0 to +1V
SCM7B40-07	±100mV
SCM7B40-08	±1V
SCM7B41-01	0 to +10V
SCM7B41-02	±5V
SCM7B41-03	10V
SCM7B41-04	0 to +5V
SCM7B41-05	0 to +20V
SCM7B41-06	0 to +40V

†Output Ranges Available

Output Range	Part No. Suffix	Example
+1 to +5V	NONE	SCM7B40-02
0 to +5V	A	SCM7B40-02A
0 to +10V	D	SCM7B40-02D

©1995-2017 Dataforth Corporation, All Rights Reserved ISO9001:2008-Registered QMS

SCM7B47

Isolated Linearized Thermocouple Input Modules

Description

SCM7B47 modules accept a single channel of input from Type J, K, T, E, R, S, B, or N thermocouples. The signal is filtered, isolated, amplified, linearized, and converted to a high-level analog voltage for output to the process control system (Figure 1).

Linearization is achieved by creating a non-linear transfer function through the module itself; refer to AN505. This non-linear transfer function is configured at the factory and is designed to be equal and opposite to the thermocouple non-linearity.

Cold junction compensation (CJC) is performed using an NTC thermistor (see "Additional SCM7B Part Numbers" section for P/N and AN701 for further information) externally mounted under the field-side terminal block on the backpanel (Figure 1). Open thermocouple detection is upscale using a 30nA current source in the input circuitry.

These modules incorporate a five-pole filtering approach to maximize both time and frequency response by taking advantage of both Thomson (Bessel) and Butterworth characteristics. One pole of the filter is on the field side of the isolation barrier; four are on the process control system side.

After the initial field-side filtering, the input signal is chopped by a proprietary chopper circuit and transferred across the transformer isolation barrier, suppressing transmission of common mode spikes and surges. The signal is then reconstructed and filtered for process control system output.

Modules accept a wide 14 - 35VDC power supply range (+24VDC nominal). Their compact packages (2.13"x1.705"x0.605" max) save space and are ideal for high channel density applications. They are designed for easy DIN rail mounting using any of the -DIN backpanels.

Features

- Interfaces to Type J, K, T, E, R, S, B and N Thermocouples
- Linearizes Thermocouple Signals
- Provides High-Level Voltage Outputs
- 1500Vrms Transformer Isolation
- Accuracy, ±0.06% to ±0.16% of Span Typical
- ANSI/IEEE C37.90.1 Transient Protection
- Input Protected to 120Vrms Continuous
- Noise, 1mVp-p (5MHz), 500µVrms (100kHz)
- 160dB CMRR
- 85dB NMR at 60Hz, 80dB at 50Hz
- Easy DIN Rail Mounting
- CSA C/US Certified
- CE and ATEX Compliant

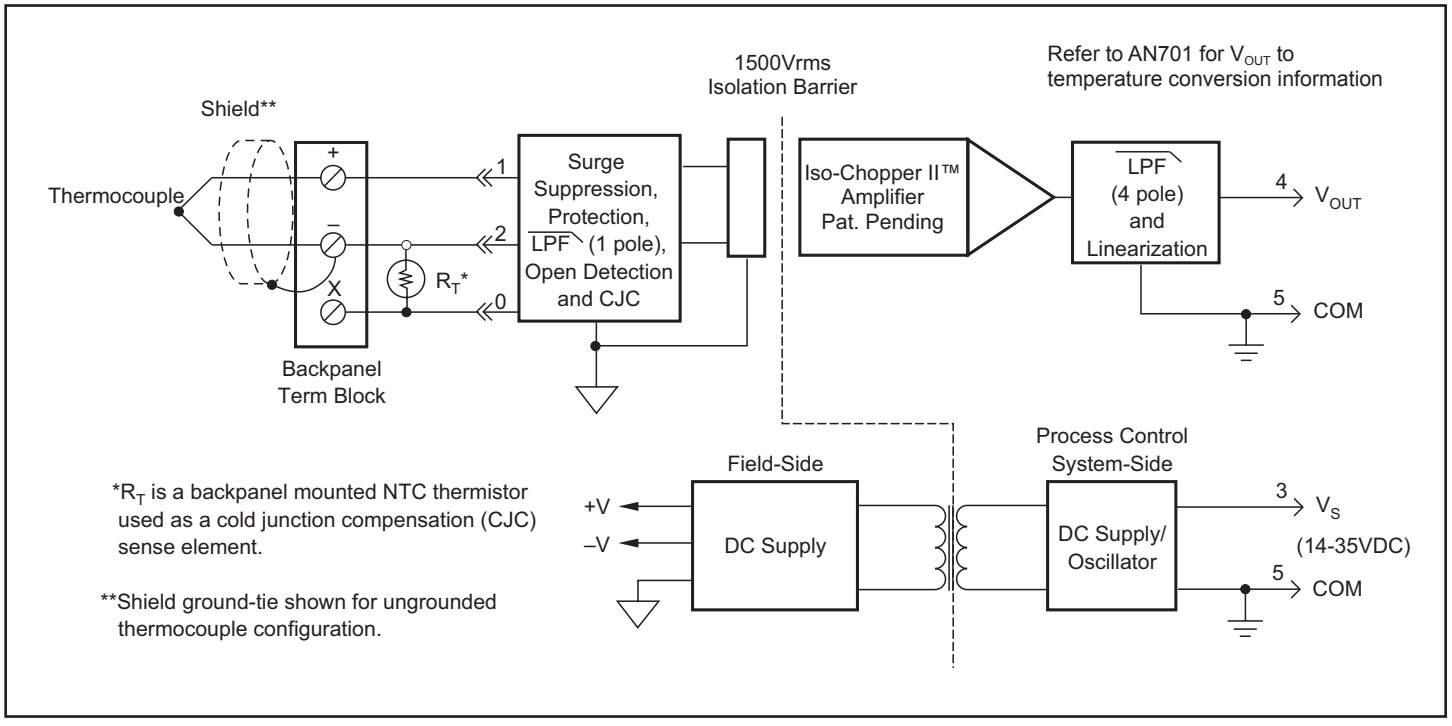

Figure 1: SCM7B47 Block Diagram

©1995-2017 Dataforth Corporation, All Rights Reserved ISO9001:2008-Registered QMS

Specifications Typical* at 25°C and +24VDC

Module	SCM7B47
Input	
Signal Range	Thermocouple(1) (See Ordering Information)
Current	–30nA
Resistance	
Normal	50MΩ
Power Off	30kΩ min
Overload	30kΩ min
Protection	
Continuous	120Vrms max
Transient	ANSI/IEEE C37.90.1
Output	
Signal Range(2)	†
Effective Available Power(2)	40mW
Resistance	<1Ω
Protection	Continuous Short to Ground
Voltage/Current Limit	±12V, ±14mA
CMV (Input-to-Output)	
Continuous	1500Vrms
Transient	ANSI/IEEE C37.90.1
CMRR (50 or 60Hz)	160dB
Accuracy(3)	(See Ordering Information)
Stability (–40°C to +85°C)	
Gain	±40ppm/°C
Input Offset	±0.5µV/°C
Zero Suppression	±0.005%(V_z)(4)/°C
Output Offset	±0.002% Span/°C
Noise	
Peak at 5MHz B/W	1mV
RMS at 10Hz to 100kHz B/W	500µV
Peak at 0.1Hz to 10Hz B/W	1µV RTI(5)
CJC Accuracy(6), +5°C to +45°C ambient	±0.25°C Typ, ±1°C max
Open Input Response	Upscale
Open Input Detection Time	<10s
Frequency and Time Response	
Bandwidth, –3dB	3Hz
NMR (50/60Hz)	80/85dB
Step Response, 90% Span	165ms
Supply Voltage	14 to 35VDC
Current(2)	16mA
Sensitivity	±0.0001%/%V_8
Mechanical Dimensions (h)(w)(d)	2.13" x 1.705" x 0.605" max (54.1mm x 43.3mm x 15.4mm max)
Environmental	
Operating Temperature Range	–40°C to +85°C
Storage Temperature Range	–40°C to +85°C
Relative Humidity	0 to 95% Noncondensing
Emissions EN61000-6-4	ISM, Group 1
Radiated, Conducted	Class A
Immunity EN61000-6-2	ISM, Group 1
RF	Performance A ±0.5% Span Error
ESD, EFT	Performance B

NOTES:
*Contact factory or your local Dataforth sales office for maximum values.
(1) Thermocouple characteristics per NIST monograph 175, ITS-90.
(2) Output Range and Supply Current specifications are based on minimum output load resistance. Minimum output load resistance is calculated by V_{OUT}^2/P_E, where P_E is the output Effective Available Power that guarantees output range, accuracy, and linearity specifications.
(3) Accuracy includes the effects of repeatability, hysteresis, and conformity.
(4) V_z is the nominal input voltage that results in a 0V output.
(5) RTI = Referenced to Input.
(6)The CJC sensor accuracy should be added to the module accuracy and thermocouple accuracy to compute overall measurement accuracy.

Ordering Information

Model‡	Input Range	Accuracy(3)(5) Typical	Accuracy(3)(5) Max
SCM7B47J-01	0°C to +760°C (+32°F to +1400°F)	±0.11% Span (0.84°C)	±0.32% Span (3.43°C)
SCM7B47J-02	–100°C to +300°C (–148°F to +572°F)	±0.10% Span (0.40°C)	±0.30% Span (1.20°C)
SCM7B47K-03	0°C to +1300°C (+32°F to +2372°F)	±0.11% Span (1.43°C)	±0.32% Span (4.16°C)
SCM7B47K-04	0°C to +600°C (+32°F to +1112°F)	±0.06% Span (0.36°C)	±0.18% Span (1.08°C)
SCM7B47T-05	0°C to +400°C (+32°F to +752°F)	±0.13% Span (0.52°C)	±0.38% Span (1.52°C)
SCM7B47T-06	–100°C to +200°C (–148°F to +392°F)	±0.16% Span (0.48°C)	±0.47% Span (1.41°C)
SCM7B47E-07	0°C to +900°C (+32°F to +1652°F)	±0.11% Span (0.99°C)	±0.34% Span (3.06°C)
SCM7B47R-08	+500°C to +1750°C (+932°F to +3182°F)	±0.10% Span (1.25°C)	±0.30% Span (3.75°C)
SCM7B47S-09	+700°C to +1750°C (+1292°F to +3182°F)	±0.08% Span (0.84°C)	±0.25% Span (2.63°C)
SCM7B47B-10	+800°C to +1800°C (+1472°F to +3272°F)	±0.12% Span (1.20°C)	±0.35% Span (3.50°C)
SCM7B47N-11	+200°C to +1300°C (+392°F to +2372°F)	±0.09% Span (0.99°C)	±0.27% Span (2.97°C)

†Output Ranges Available

Output Range	Part No. Suffix	Example
+1 to +5V	NONE	SCM7B47J-01
0 to +5V	A	SCM7B47J-01A
0 to +10V	D	SCM7B47J-01D

‡Thermocouple Alloy Combinations

Standards: DIN IEC 584, ANSI MC96-1-82, JIS C 1602-1981

Type	Material
J	Iron vs. Copper-Nickel
K	Nickel-Chromium vs. Nickel-Aluminum
T	Copper vs. Copper-Nickel
E	Nickel-Chromium vs. Copper-Nickel
R	Platinum-13% Rhodium vs. Platinum
S	Platinum-10% Rhodium vs. Platinum
B	Platinum-30% Rhodium vs. Platinum-6% Rhodium
N	Nickel-14.2% Chromium-1.4% Silicon vs. Nickel-4.4% Silicon- 0.1% Magnesium

©1995-2017 Dataforth Corporation, All Rights Reserved ISO9001:2008-Registered QMS

SCM7B

Module Dimensions and Pinouts

The following mechanical drawing is useful if designing circuit boards to mount the SCM7B modules. Many sockets are available which accept the mounting pins. As an example, AMP Inc. provides a socket with part number 50865-5.

The captive nut for the 4-40 mounting screw can be obtained from PEM (Penn Engineering and Manufacturing), part number KSF2-440.

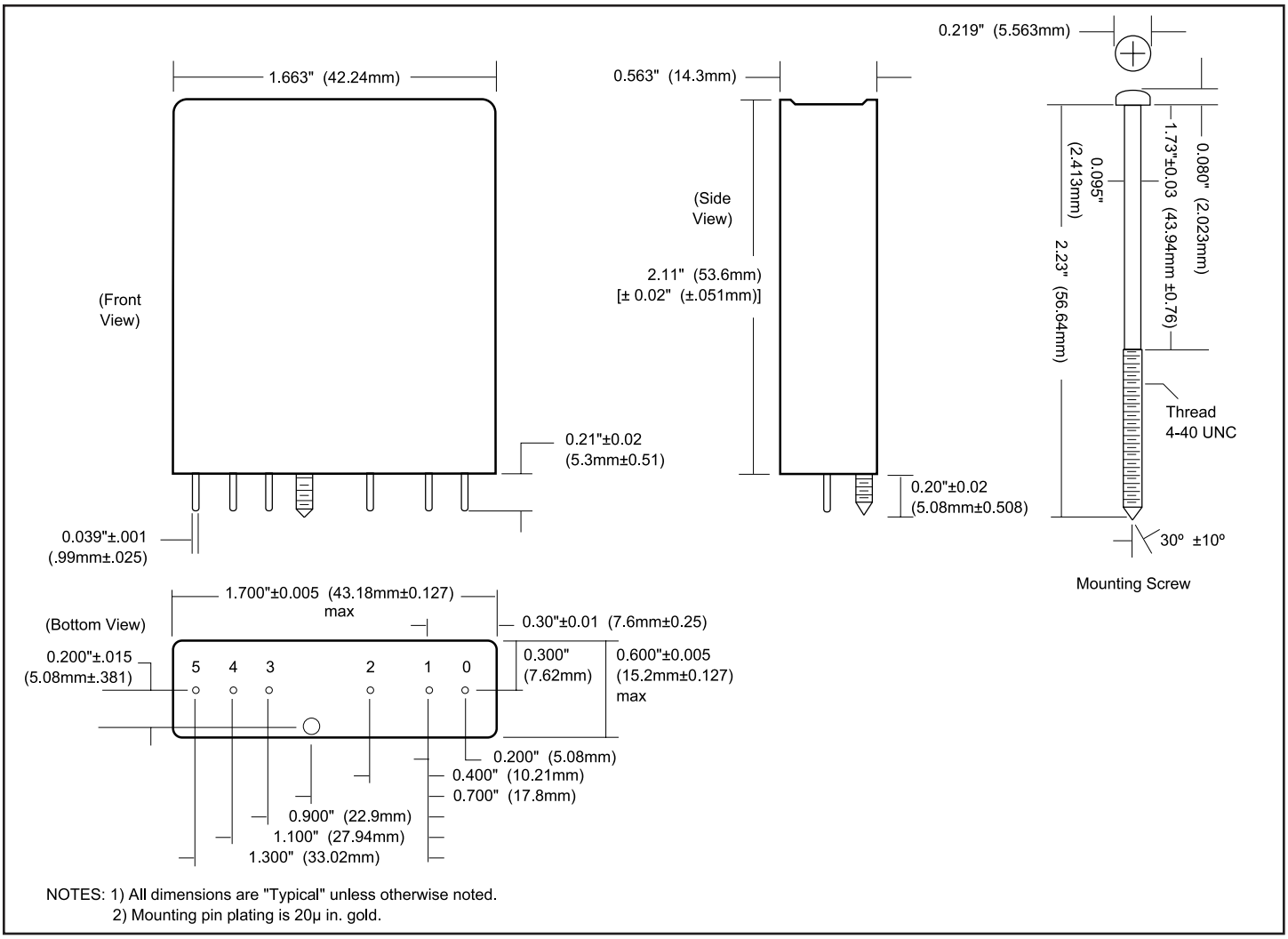

Figure 1: SCM7B Module Dimensions

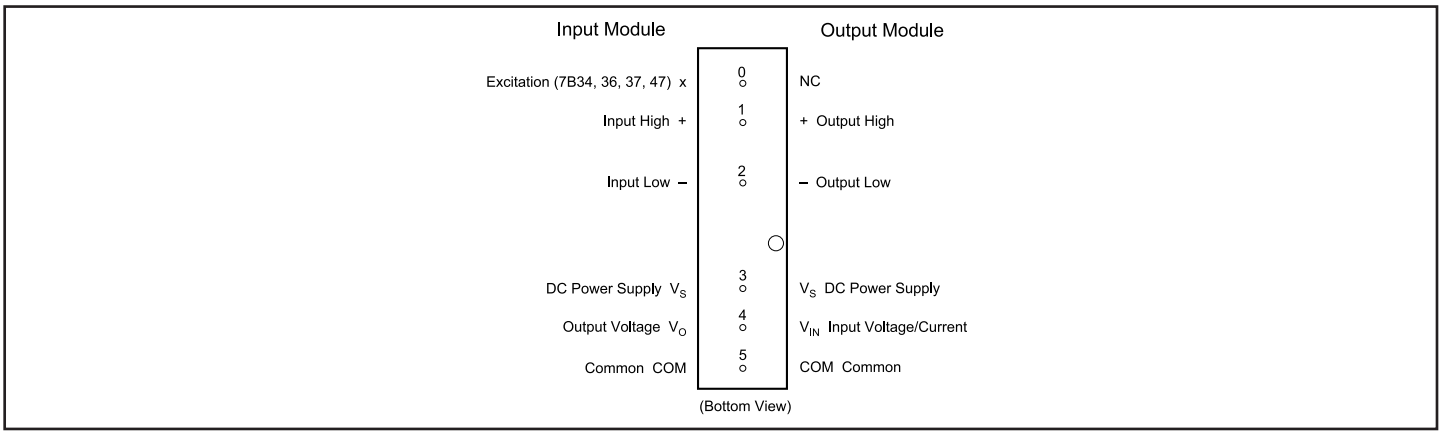

Figure 2: SCM7B Pinouts

©1995-2017 Dataforth Corporation, All Rights Reserved ISO9001:2008-Registered QMS

SCM7BXEV

Description

The SCM7BXEV (Figures 1 and 2) is a single channel backpanel that can accept any of the SCM7B analog modules. It is meant to be used primarily for module evaluation. Unlike multiple channel backpanels, the single high-level system output (or input) signal is routed to all channel pins on the system interface DB25 connector. The backpanel contains four standoffs to allow mounting, using a #6 or smaller screw.

System Side - Power

Using the "V+" supply input, the power supply voltage can be as little as +14VDC. If +15VDC is available, it is recommended that the supply be connected between the "V+A" or "V+B" connections and "COM"; this will protect the module against accidental supply reversal. Using both these connections with two power supplies enables redundant operation. It is also recommended that a diode transient absorber be installed to reduce power supply transient events from degrading system performance. An "accessory" location, between the supply and common lines, is provided for this purpose. The backpanel is fused at 1/4 Amp for module protection.

System Side - Signal

The SCM7BXEV uses either the SCM7BXCA01 (DB25 to 26-pin adapter cable) and SCMXCA004-XX (26-pin to 26-pin interface cable), or the SCM7BXCA02 (DB25 to DB25 interface cable), depending on system requirements.

Field Side - Signal

On the field side, a temperature sensor is mounted underneath the field side terminal block to provide cold junction compensation for thermocouple modules, and a current-to-voltage conversion resistor (P/N SCM7BXR1) socketing location is provided (supplied with SCM7B33 modules). Field connections are terminated with three screw terminals.

Specifications

Operating Temperature Relative Humidity	–40°C to +85°C 95% Noncondensing
Interface Connector: Field System	 high density screw clamp, 10-24 AWG DB25 (male) with 4-40 screwlocks and high density screw clamp, 10-24 AWG

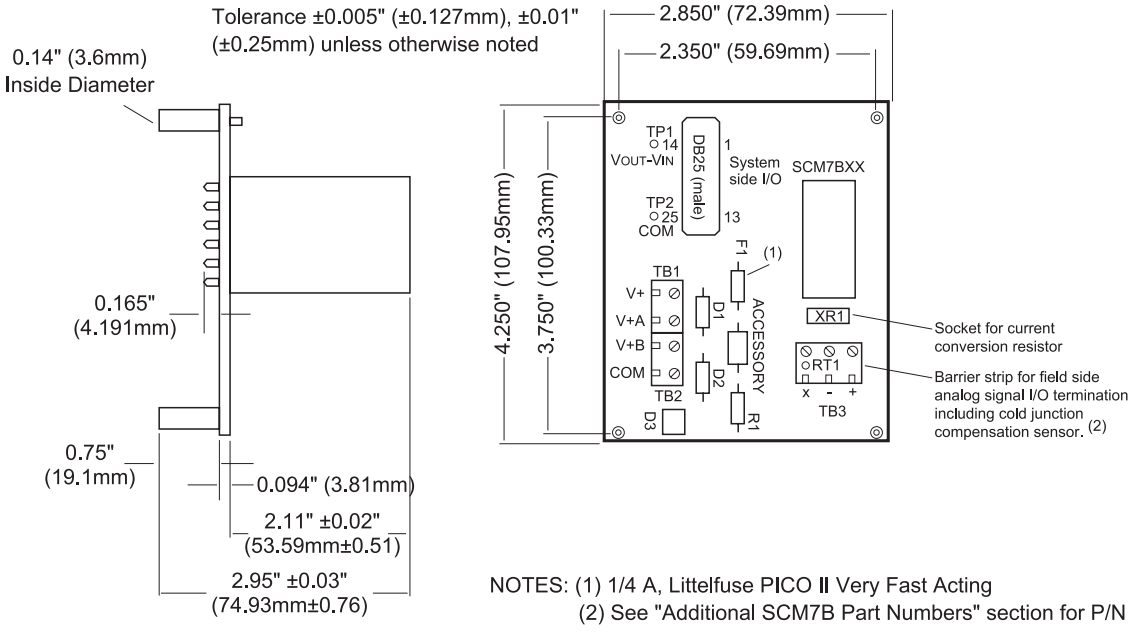

Figure 1: SCM7BXEV Dimensions

©1995-2017 Dataforth Corporation, All Rights Reserved ISO9001:2008-Registered QMS

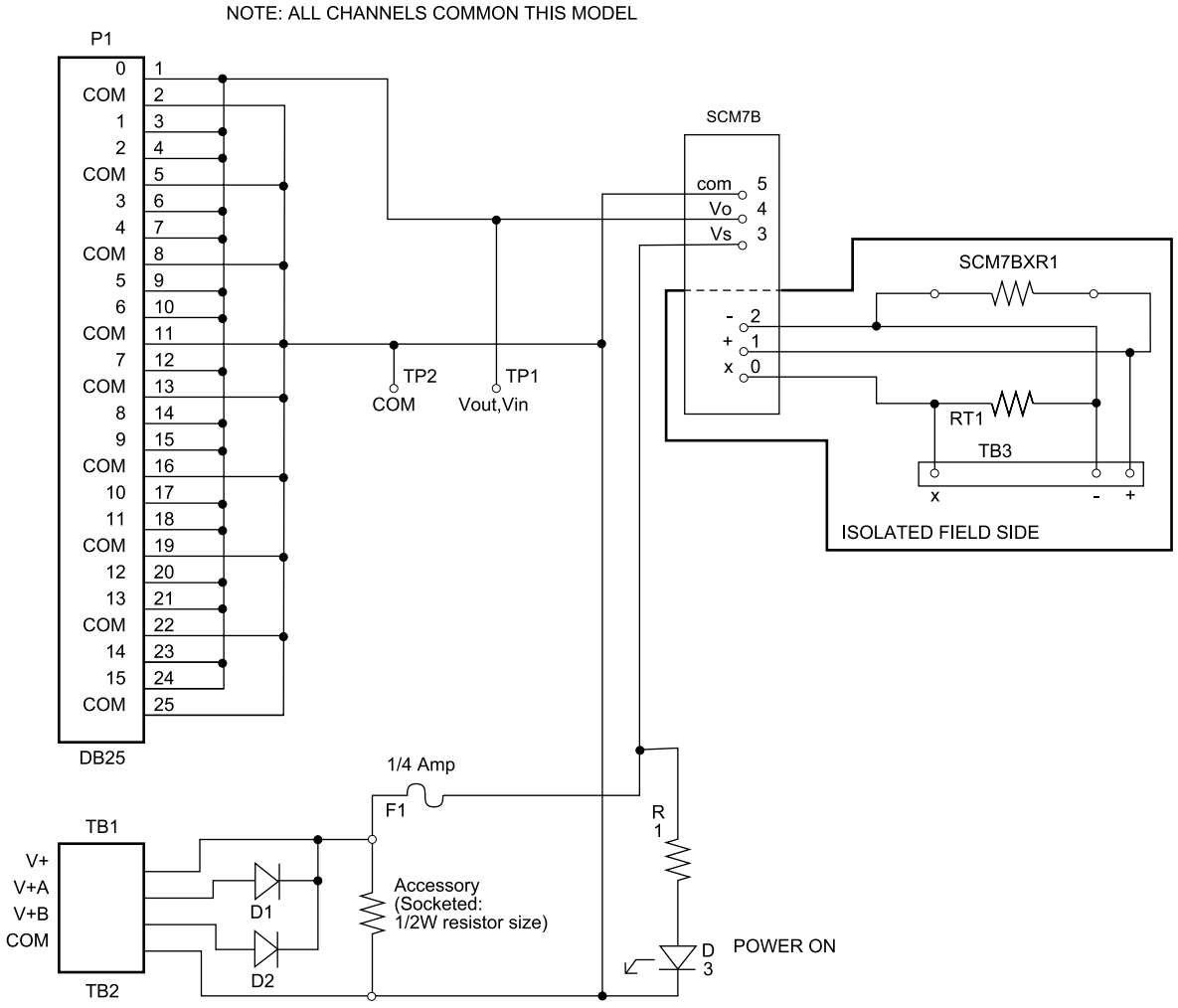

Figure 2: SCM7BXEV Schematic Diagram

©1995-2017 Dataforth Corporation, All Rights Reserved ISO9001:2008-Registered QMS

SCM7BP01/SCM7BP02

Backpanel

Description

The SCM7BP01 (Figure 3) and SCM7BP02 (Figure 4) are 1 and 2 channel backpanels. Unlike other backpanels available, both the system and field side sides have screw terminal connectors able to accept discrete wire (10-24 AWG). The backpanels can be ordered with standoffs to allow mounting, using a #6 or smaller screw, or with DIN rail mounting hardware.

System Side - Power

Both backpanels accept 14-35VDC between "V+" and "COM" using a screw terminal (10-24 AWG) block. No reverse supply diodes are provided with this model, but both are fused at 1/4 Amp (01) or 1/2 Amp (02) for module protection.

Field Side - Signal

On the field side, a temperature sensor is mounted underneath the field side terminal block to provide cold junction compensation for thermocouple modules, and a current-to-voltage conversion resistor (P/N SCM7BXR1) socket location is provided (supplied with SCM7B33 modules).

Specifications

Operating Temperature	–40°C to +85°C
Relative Humidity	95% Noncondensing
Interface Connector:	
Field	high density screw clamp, 10-24 AWG
System	high density screw clamp, 10-24 AWG
Isolation:	
Input-to-Output	1500Vrms continuous, max
Channel-to-Channel	1500Vrms continuous, max

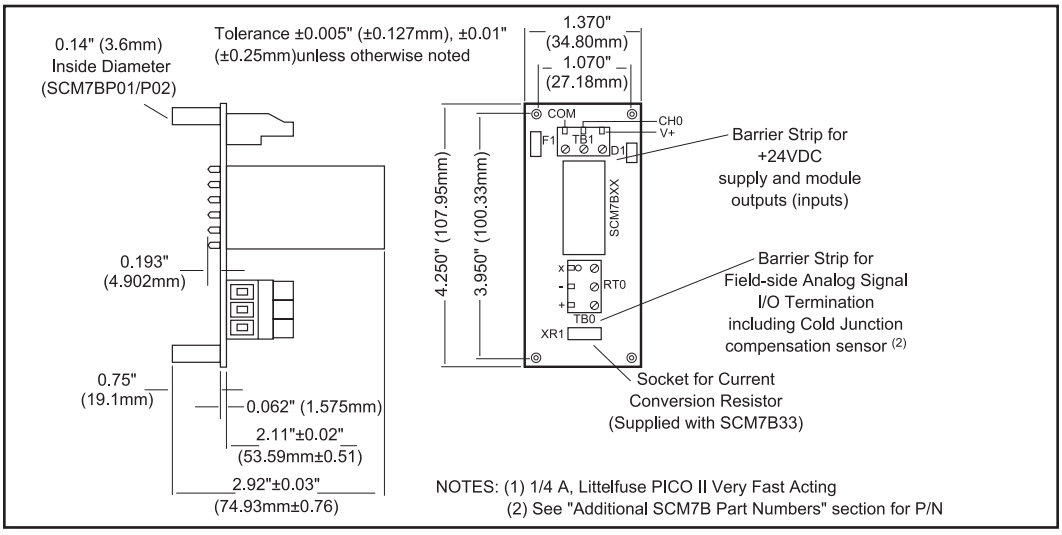

Figure 3: SCM7BP01 Dimensions

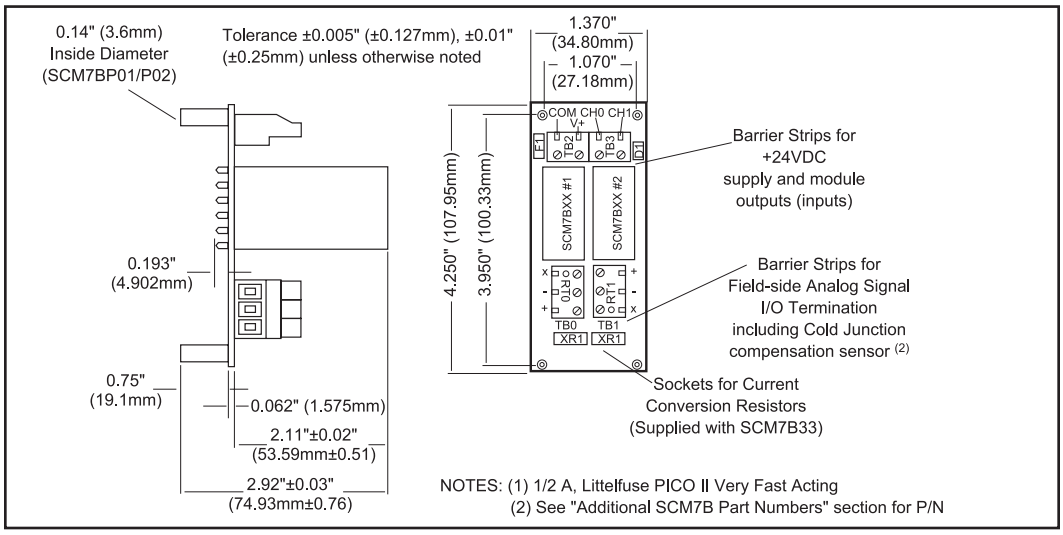

Figure 4: SCM7BP02 Dimensions

©1995-2017 Dataforth Corporation, All Rights Reserved ISO9001:2008-Registered QMS

SCM7BP01-DIN/SCM7BP02-DIN

Panels & DIN Rail Mounting Accessories

Description

The SCM7BP01 and SCM7BP02 are single and dual channel mounting panels for the SCM7B modules. Both have options for standoffs or DIN rail mounting.

The following accessories are required for DIN rail mounting one SCM7BP01 or SCM7BP02 panel (Figure 5):

Qty	Model	Description
1	SCMXBEFE	Base element with snap foot
2	SCMXSE	Side element

The following accessories are required for DIN rail mounting two or more SCM7BP01-4 or SCM7BP02-4 panels:

Qty	Model	Description
2	SCMXBEFE	Base element with snap foot
2	SCMXSE	Side element
(# panels) - 2	SCMXBE	Base element without snap foot
(4 x (# panels))-4	SCMXVS	Connection pins

The following DIN rail styles are available. Specify length in meters (-XX).

SCMXRAIL1-XX DIN EN 50022-35x7.5 (slotted steel)
SCMXRAIL2-XX DIN EN 50035-G32 (slotted steel)
SCMXRAIL3-XX DIN EN 50022-35x15 (slotted steel)

Ordering Information

Part Number	Description
SCM7BP01	Single channel backpanel with standoffs for mounting.
SCM7BP01-4	Single channel backpanel. No mounting hardware included.
SCM7BP01-DIN	Single channel backpanel with DIN rail mounting hardware. Shipped fully assembled.
SCM7BP02	Dual channel backpanel with standoffs for mounting.
SCM7BP02-4	Dual channel backpanel. No mounting hardware included.
SCM7BP02-DIN	Dual channel backpanel with DIN rail mounting hardware. Shipped fully assembled.

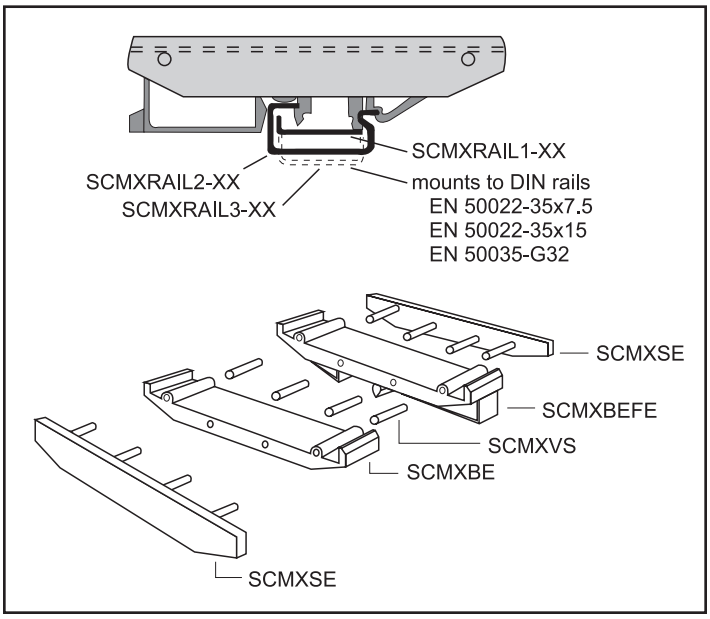

Figure 5: DIN Rail Mounting Elements

©1995-2017 Dataforth Corporation, All Rights Reserved ISO9001:2008-Registered QMS

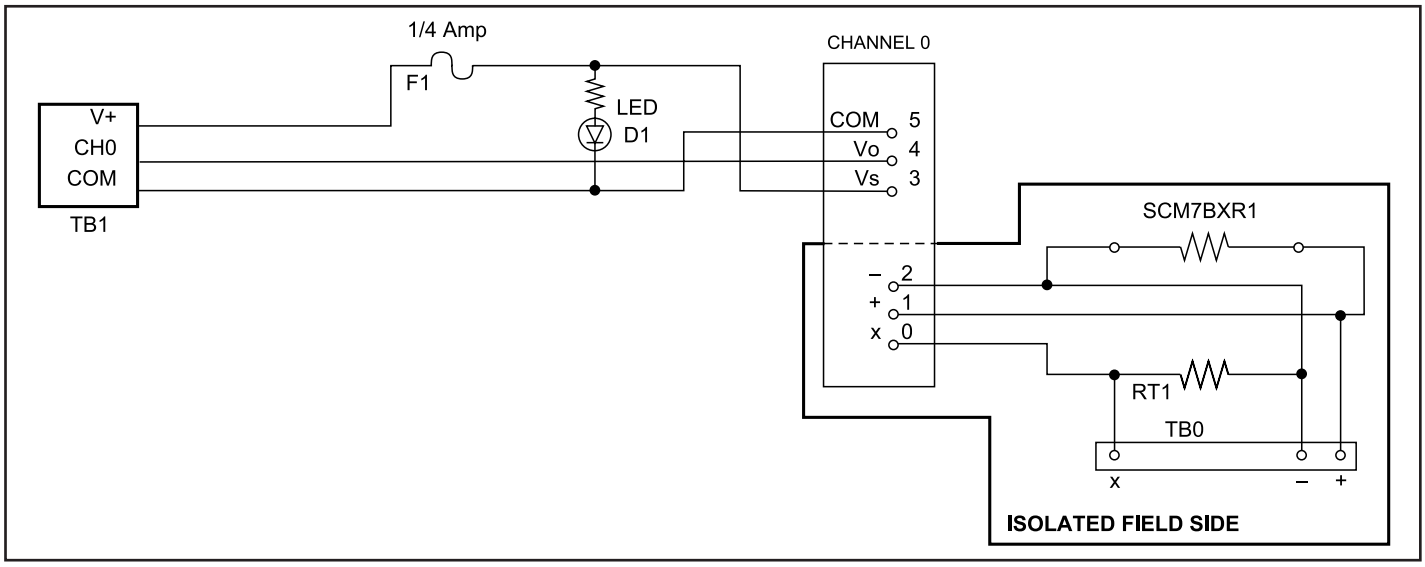

Figure 6: SCM7BP01 (-DIN) Schematic Diagram

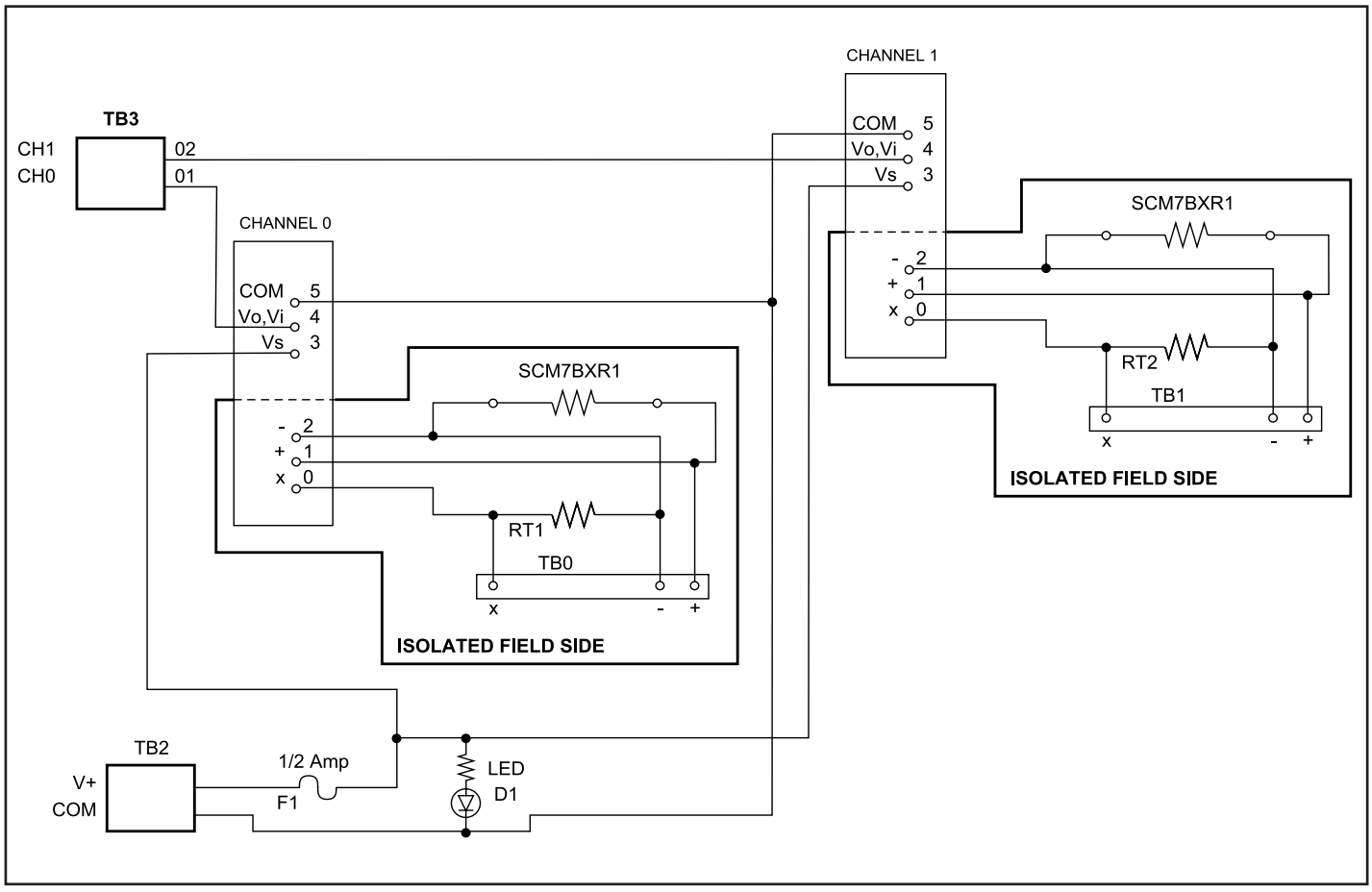

Figure 7: SCM7BP02 (-DIN) Schematic Diagram

©1995-2017 Dataforth Corporation, All Rights Reserved ISO9001:2008-Registered QMS

SCM7BP04(-DIN)/SCM7BP08(-DIN)/SCM7BP16(-DIN)

Backpanels

Description

The SCM7BP04, SCM7BP08, and SCM7BP16 (see Figures 8-11) are 4, 8, & 16 channel backpanels that can accept any of the SCM7B analog modules. All three of these backpanels can either be rack mounted using Dataforth's 19-inch rack P/N SCMXRK-002 (using the provided 3mm screws), or directly mounted to a surface using #6 or smaller screws. The SCM7BP04-DIN, SCM7BP08-DIN, and SCM7BP16-DIN are identical to the SCM7BP04, SCM7BP08, and SCM7BP16, but with DIN rail mounting clips attached instead of standoffs. These brackets allow the backpanels to be mounted on either EN 50022-35 x 7.5 (35 x 15) or EN 50035-G32 type DIN rails.

System Side - Power

Using the "V+" power supply input, the power supply voltage can be as little as +14VDC. If +15VDC is available, it is recommended that the supply be connected between the "V+A" or "V+B" connections and "COM"; this will protect the modules against accidental supply reversal. Using both these connections with two power supplies enables redundant power supply operation. It is also recommended that a diode transient absorber be installed to reduce power supply transient events from degrading system performance. An "accessory" location, between the supply and common lines, is provided for this purpose. A system side grounding #10-32 stud is also provided for use if desired. All backpanels are fused according to channel count, allowing 1/4 Amp per channel.

System Side - Signal

Two system interface DB25 connectors are used, to enable using both input and output modules simultaneously, or to route the signal from an input module backplane to an output module backplane. These backpanels use either the SCM7BXCA01 (DB25 to 26-pin adapter cable) and SCMXCA004-XX (26-pin to 26-pin interface cable), or the SCM7BXCA02 (DB25 to DB25 interface cable), depending on system requirements.

Field Side - Signal

On the field side a temperature sensor is mounted underneath the field side terminal block to provide cold junction compensation for thermocouple input modules. A current-to-voltage conversion resistor (P/N SCM7BXR1, supplied with SCM7B33 modules) socket is provided for each channel. Field connetions are terminated with three screw terminals at each module site.

Ordering Information

Part Number	Description
SCM7BP04	4-channel backpanel with standoffs for mounting.
SCM7BP04-DIN	4-channel backpanel with DIN rail mounting clips. Shipped fully assembled.
SCM7BP08	8-channel backpanel with standoffs for mounting.
SCM7BP08-DIN	8-channel backpanel with DIN rail mounting clips. Shipped fully assembled.
SCM7BP16	16-channel backpanel with standoffs for mounting.
SCM7BP16-DIN	16-channel backpanel with DIN rail mounting clips. Shipped fully assembled.

Specifications

Operating Temperature	–40°C to +85°C
Relative Humidity	95% Noncondensing
Interface Connector:	
Field	high density screw clamp, 10-24 AWG
System	2 DB25 (male) connectors with 4-40 screwlocks
Isolation:	
Input-to-Output	1500Vrms continuous, max
Channel-to-Channel	1500Vrms continuous, max

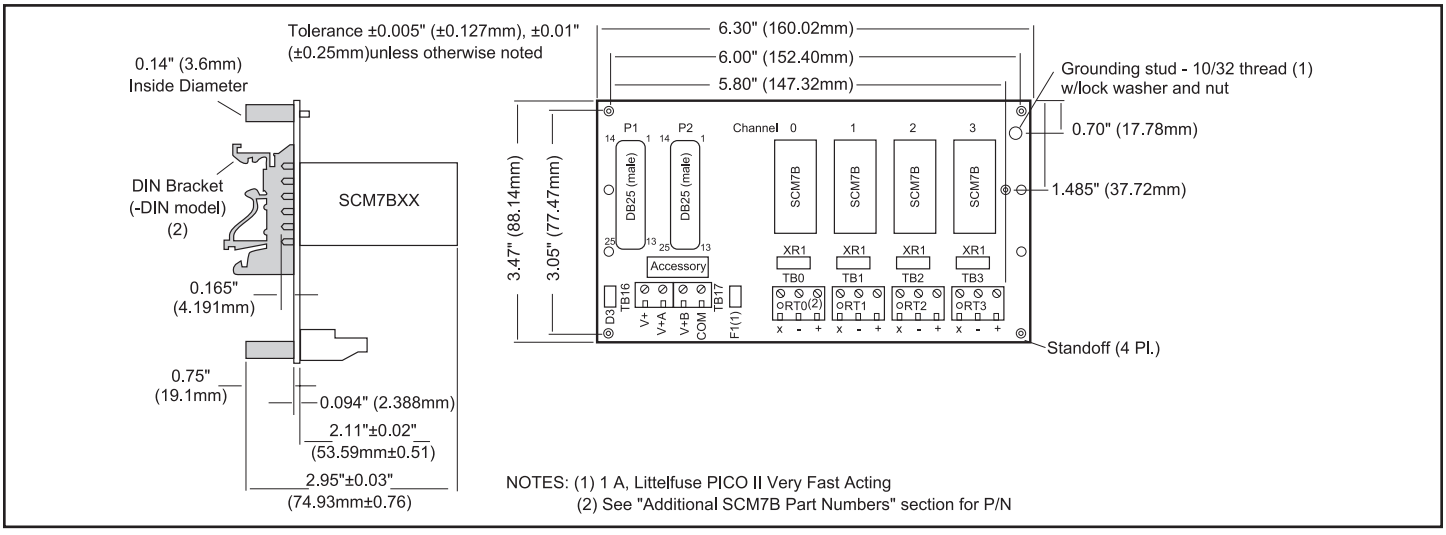

Figure 8: SCM7BP04(-DIN) Dimensions

©1995-2017 Dataforth Corporation, All Rights Reserved ISO9001:2008-Registered QMS

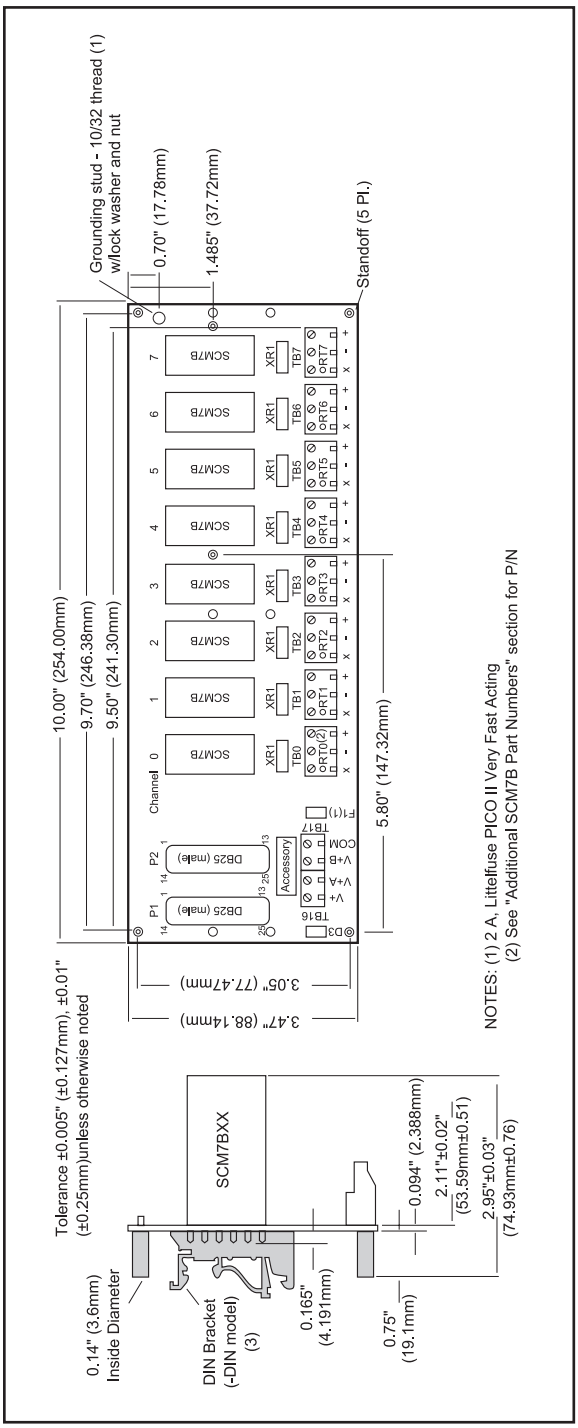

Figure 9: SCM7BP08(-DIN) Dimensions

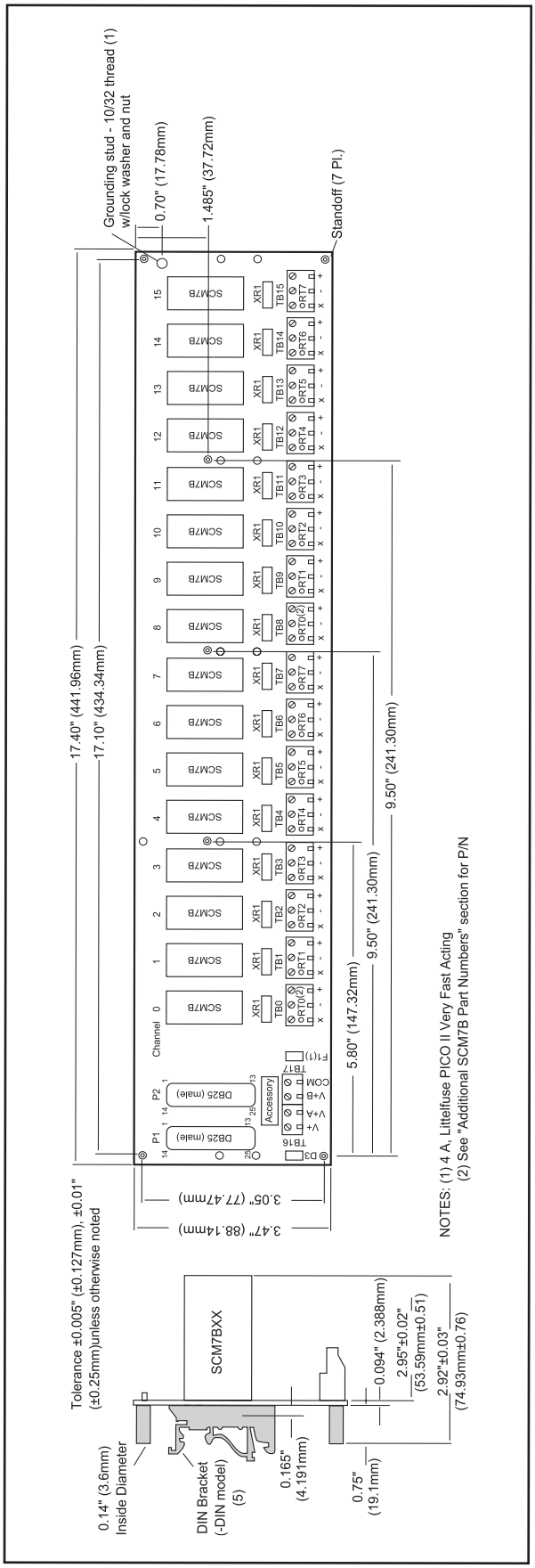

Figure 10: SCM7BP16(-DIN) Dimensions

©1995-2017 Dataforth Corporation, All Rights Reserved ISO9001:2008-Registered QMS

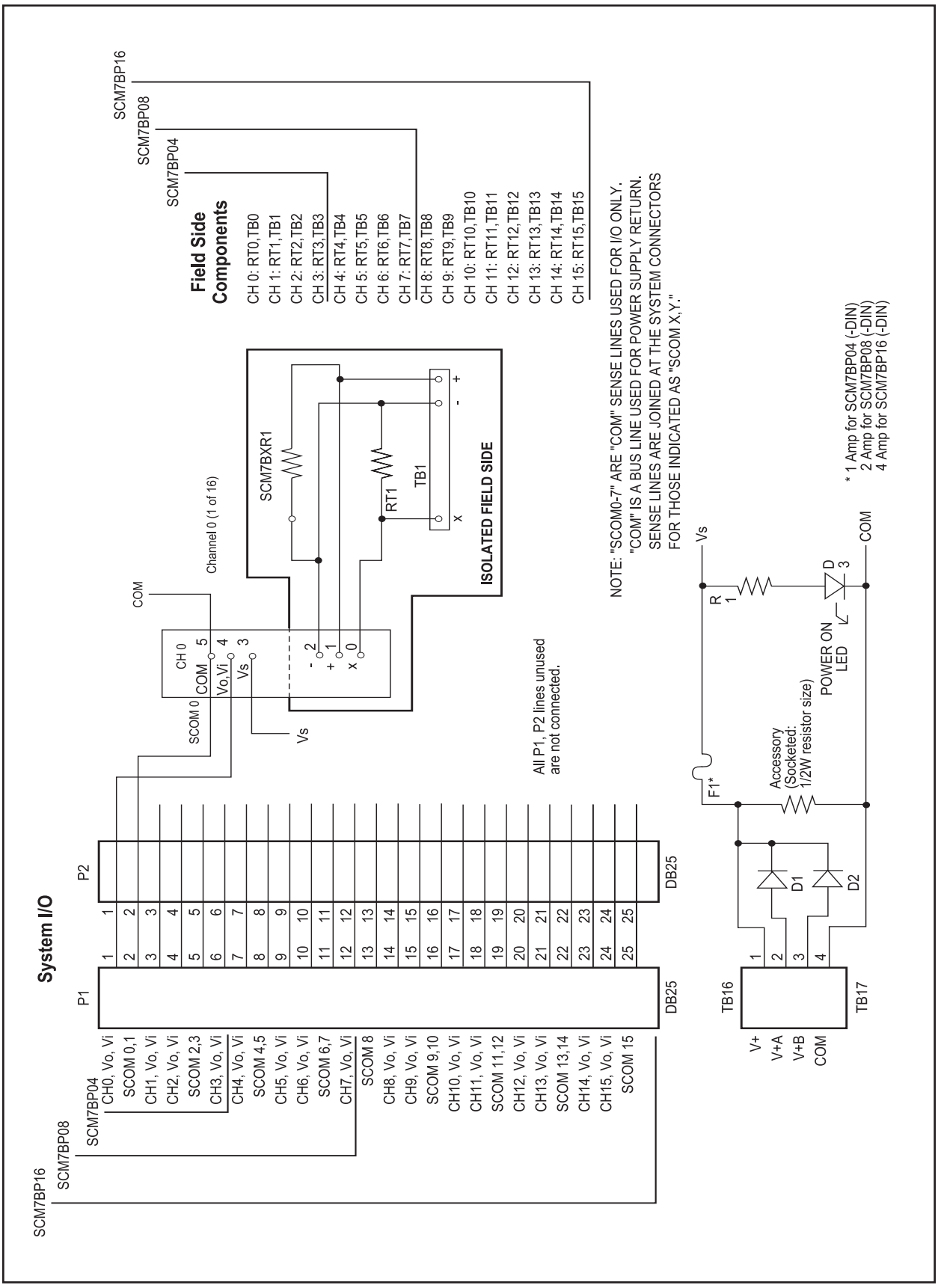

Figure 11: SCM7BP04/08/16(-DIN) Schematic Diagram

©1995-2017 Dataforth Corporation, All Rights Reserved ISO9001:2008-Registered QMS

SCMXRK-002 19-Inch Metal Mounting Rack

Description

The SCMXRK-002 is a 19-inch metal rack for mounting the SCM7BP04/08/16, SCMPB01/02/05/06, SCMVAS-PB8/PB16, and isoLynx® SLX200-xx backpanels. It also provides capability to mount a system power supply and the universal interface board, P/N SCMXIF. (See Figure 12 for dimensions.)

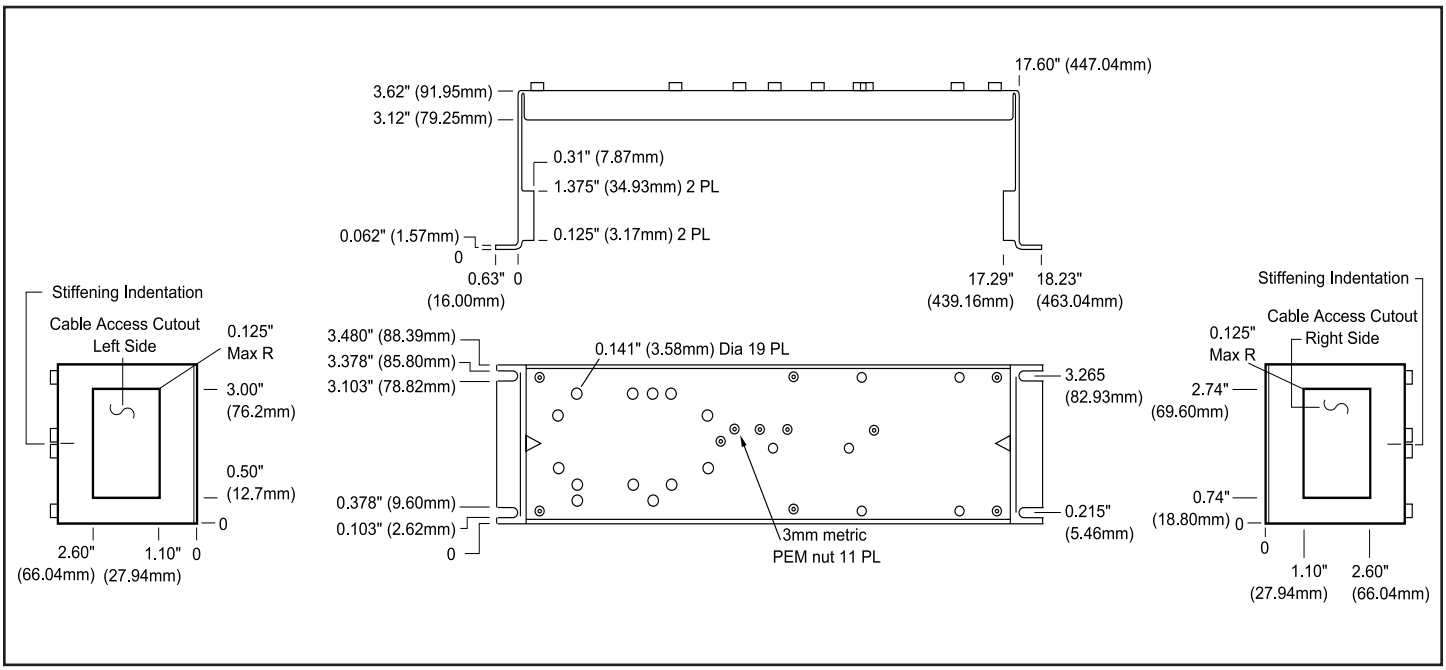

Figure 12: SCMXRK-002 Analog Rack Dimensions

©1995-2017 Dataforth Corporation, All Rights Reserved ISO9001:2008-Registered QMS

SCMXCA006-01, -02, -07

Interface Cables

Description

SCMXCA006-XX

System interface cable for the SCM7BP04/08/16 backpanels. This is a DB25 Male/Female cable assembly. It can be ordered in lengths of 1m, 2m, and 7m (see Figure 13).

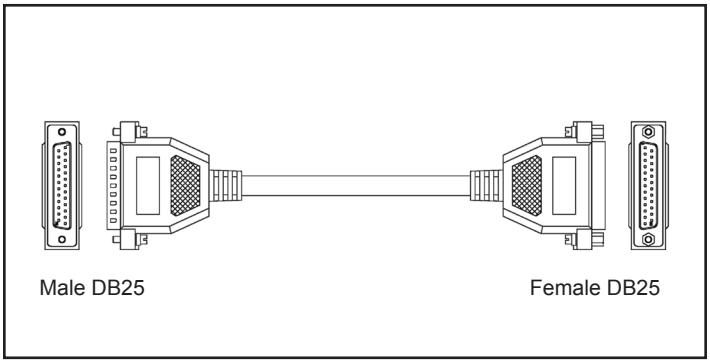

Figure 13: SCMXCA006-XX System Interface Cable

8BXIF (-DIN)

Universal Interface Board

Description

The 8BXIF is a universal interface board which converts a DB25 cable input to 25 screw terminals for discrete wire. It can be mounted on the back of the SCMXRK-002 mounting rack (8BXIF) or on a DIN rail (8BXIF-DIN). Required mounting hardware is included. Use SCMXCA006-XX cable (see Figure 14 for dimensions).

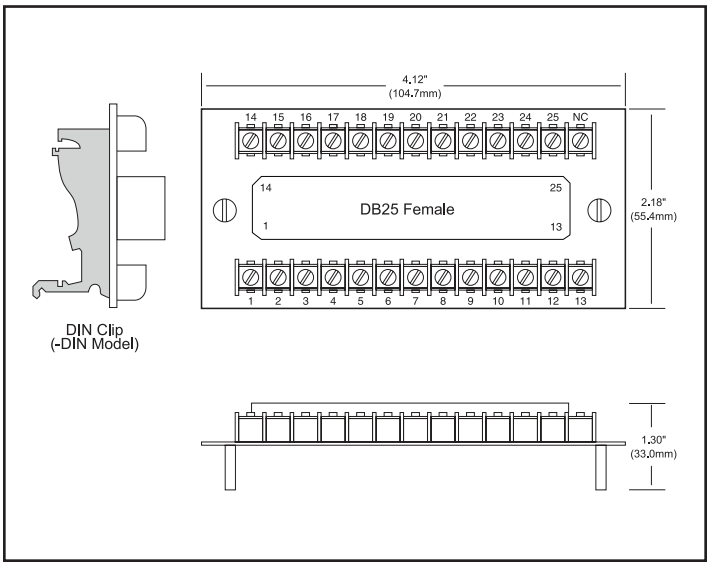

Figure 14: 8BXIF Universal Interface Board Dimensions

SCM7BXR1

Current Conversion Resistor

Description

The SCM7BXR1 current-to-voltage conversion resistor (250Ω, 0.1%, 10ppm) is used with the SCM7B33 voltage input modules. Sockets are provided on all backpanels to allow installation of this resistor. Other values are available; consult the factory for ordering details and specifications.

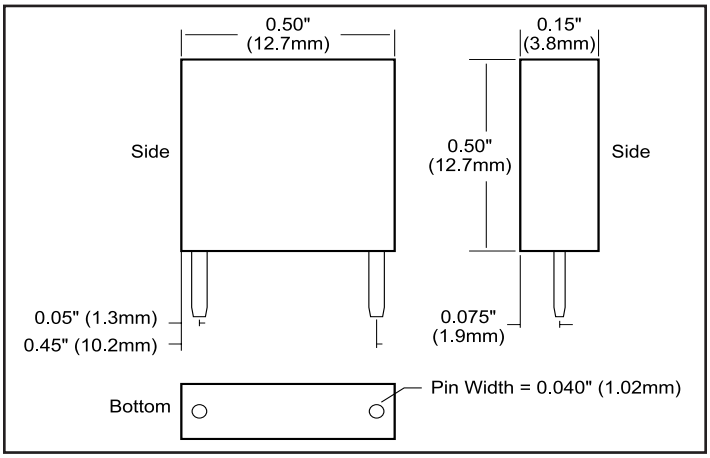

Figure 15: SCM7BXR1 Dimensions

©1995-2017 Dataforth Corporation, All Rights Reserved ISO9001:2008-Registered QMS

SCM7BPT

Non-Isolated Pass Thru Module

Description

The SCM7BPT is a non-isolated signal pass-through module which shorts together the signal inputs-to-outputs.

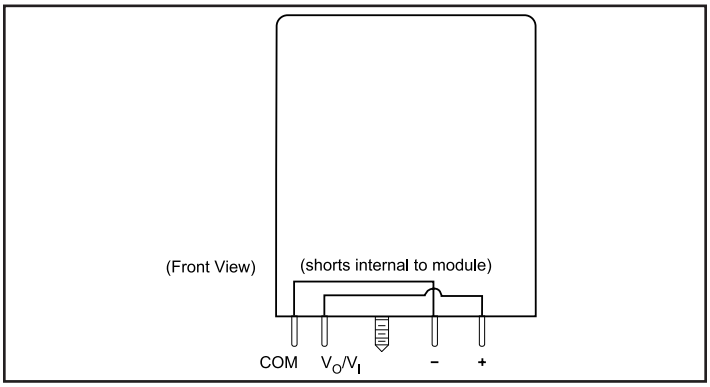

Figure 16: SCM7BPT

SCM7B-PROTO

Breadboard Kit

Description

The SCM7B-PROTO breadboard kit was designed to allow users to incorporate their own module functions using an SCM7B format. The kit includes a pc board designed for breadboard circuits, a module case, header and mounting screw. Contact the factory for additional information.

Additional Part Numbers of Interest

The following is a list of parts that are available for use with your SCM7B system, or for fabrication of your own backpanel, along with manufacturer's part number. Dataforth makes no claim as to availability and/or quality of parts purchased from vendors other than Dataforth.

Part Description	Part Number	Manufacturer
CJC Thermistor	100K6A1 DC95G104W	Betatherm Corp. Thermometrics
Diode Transient Absorber	SA series	General Semiconductor
Sockets for SCM7B pins	50865-5	Amp Incorporated
Module retaining screw captive nut, 4-40 thread	KSF2-440	PEM Engineering
Grounding Stud, 0.625", 10-32 thread	KFH 10-32-10	PEM Engineering

Part Description	Part Number	Manufacturer
Axial Fuse	PICO II series	Littelfuse
2 position termination block	MKDS5/2-6,35	Phoenix Contact, Inc.
3 position termination block	MKDS5/3-6,35	Phoenix Contact, Inc.
DB25 (male) PCB connector	745078-3	AMP Incorporated
DB25 (female) ribbon connector (for custom cables)	745078-5	AMP Incorporated
0.062" PCB Standoff	647A-5015-19	Concord
0.094" PCB Standoff	647A-5023-19	Concord

©1995-2017 Dataforth Corporation, All Rights Reserved ISO9001:2008-Registered QMS

8B

SensorLex® 8B Isolated Analog Signal Conditioners

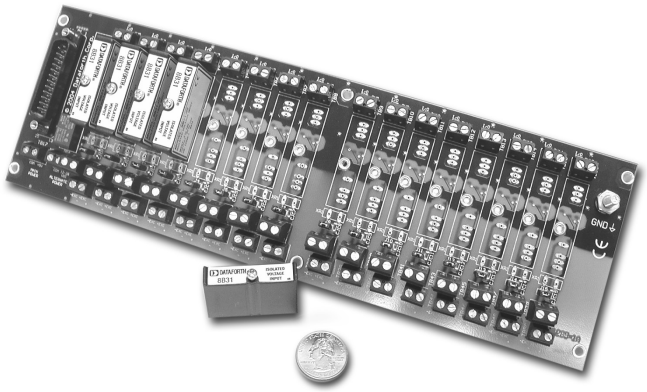

8B Modules

Dataforth's SensorLex® 8B line of isolated analog signal conditioners includes 20 family groups with a total of 135 models that interface to a wide variety of voltage, current, temperature, position, frequency, and strain measuring devices. Housed in a package only one-fifth the size of competing products, the 8B offers fully functional Instrument Class® performance with superior specifications such as ±0.05% accuracy, ±0.02% linearity, 5-pole filtering, 1500Vrms isolation, low output noise and much more.

Custom Signal Conditioning

Custom modules are available: consult factory for minimum quantity and pricing details on custom input ranges, output ranges, bandwidth, and other key parameters.

Features

- ±0.05% Accuracy (Typical)
- ±0.02% Linearity
- 1500Vrms Transformer Isolation & up to 240Vrms Field-side Protection
- ANSI/IEEE C37.90.1 Transient Protection
- 5V Power (30mA Typical)
- 5-Pole Low-Pass Filtering
- Up to 120dB CMR
- 70dB NMR at 60Hz
- –40°C to +85°C Operating Temperature
- C-UL-US Listed (Class I, Division 2, Groups A, B, C, D)
- CE Compliant
- ATEX Compliance Pending
- Manufactured per RoHS II Directive 2011/65/EU

Applications

- Designed for Embedded Applications
  - PC/104 Embedded Solutions
  - Compact PCI Systems
  - VMEbus Systems
  - PXI Systems
- Protects User Equipment from Lightning and Industrial Equipment Power-Line Voltage
- Reduces Electrical Noise in Measured Signals
- Convenient System Expansion and Repair

©1995-2017 Dataforth Corporation, All Rights Reserved ISO9001:2008-Registered QMS

8B Selection Guide

VOLTAGE INPUT MODULES, 3Hz BANDWIDTH Page 104

MODEL	INPUT RANGE	OUTPUT RANGE
8B30-01	±10mV	±5V
8B30-02	±50mV	±5V
8B30-03	±100mV	±5V
8B30-04	±10mV	0 to +5V
8B30-05	±50mV	0 to +5V
8B30-06	±100mV	0 to +5V
8B31-01	±1V	±5V
8B31-02	±5V	±5V
8B31-03	±10V	±5V
8B31-04	±1V	0 to +5V
8B31-05	±5V	0 to +5V
8B31-06	±10V	0 to +5V
8B31-07	±20V	±5V
8B31-08	±20V	0 to +5V
8B31-09	±40V	±5V
8B31-10	±40V	0 to +5V
8B31-12	±60V	±5V
8B31-13	±60V	0 to +5V

CURRENT INPUT MODULES, 3Hz BANDWIDTH Page 106

MODEL	INPUT RANGE	OUTPUT RANGE
8B32-01	4 to 20mA	0 to +5V
8B32-02	0 to 20mA	0 to +5V

ISOLATED TRUE RMS INPUT MODULES Page 108

MODEL	INPUT RANGE	OUTPUT RANGE
8B33-01	0 to 100mV	0 to +5V
8B33-02	0 to 1V	0 to +5V
8B33-03	0 to 10V	0 to +5V
8B33-04	0 to 150V	0 to +5V
8B33-05	0 to 300V	0 to +5V
8B33-06	0 to 1A	0 to +5V

LINEARIZED 2- OR 3-WIRE RTD MODULES (0 to +5V OUTPUT, 3Hz BW) Page 110

MODEL	TYPE	INPUT RANGE
8B34-01	100Ω Pt	–100°C to +100°C (–148°F to +212°F)
8B34-02	100Ω Pt	0°C to +100°C (+32°F to +212°F)
8B34-03	100Ω Pt	0°C to +200°C (+32°F to +392°F)
8B34-04	100Ω Pt	0°C to +600°C (+32°F to +1112°F)

LINEARIZED 4-WIRE RTD MODULES (0 to +5V OUTPUT, 3Hz BW) Page 112

MODEL	TYPE	INPUT RANGE
8B35-01	100Ω Pt	–100°C to +100°C (–148°F to +212°F)
8B35-02	100Ω Pt	0°C to +100°C (+32°F to +212°F)
8B35-03	100Ω Pt	0°C to +200°C (+32°F to +392°F)
8B35-04	100Ω Pt	0°C to +600°C (+32°F to +1112°F)

POTENTIOMETER INPUT MODULES (0 to +5V OUTPUT, 3Hz BW) Page 114

MODEL	INPUT RANGE	OUTPUT RANGE
8B36-01	0 to 100Ω	0 to +5V
8B36-02	0 to 500Ω	0 to +5V
8B36-03	0 to 1kΩ	0 to +5V
8B36-04	0 to 10kΩ	0 to +5V

THERMOCOUPLE INPUT MODULES (0 to +5V OUTPUT, 3Hz BW) Page 116

MODEL	TYPE	INPUT RANGE
8B37J	J	–100°C to +760°C (–148°F to +1400°F)
8B37K	K	–100°C to +1350°C (–148°F to +2462°F)
8B37T	T	–100°C to +400°C (–148°F to +752°F)
8B37R	R	0°C to +1750°C (+32°F to +3182°F)
8B37S	S	0°C to +1750°C (+32°F to +3182°F)

STRAIN GAGE INPUT MODULES Page 118

MODEL	INPUT RANGE	EXCITATION VOLTAGE	SENS	OUTPUT RANGE	BW
8B38-01	±10mV	+3.333V	3mV/V	±5V	8kHz
8B38-02	±30mV	+10.0V	3mV/V	±5V	8kHz
8B38-05	±20mV	+10.0V	2mV/V	±5V	8kHz
8B38-06	±10mV	+3.333V	3mV/V	0 to +5V	8kHz
8B38-07	±30mV	+10.0V	3mV/V	0 to +5V	8kHz
8B38-08	±20mV	+10.0V	2mV/V	0 to +5V	8kHz
8B38-31	±10mV	+3.333V	3mV/V	±5V	3Hz
8B38-32	±30mV	+10.0V	3mV/V	±5V	3Hz
8B38-35	±20mV	+10.0V	2mV/V	±5V	3Hz
8B38-36	±10mV	+3.333V	3mV/V	0 to +5V	3Hz
8B38-37	±30mV	+10.0V	3mV/V	0 to +5V	3Hz
8B38-38	±20mV	+10.0V	2mV/V	0 to +5V	3Hz

CURRENT OUTPUT MODULES, 100Hz BANDWIDTH Page 120

MODEL	INPUT RANGE	OUTPUT RANGE
8B39-01	0 to +5V	4 to 20mA
8B39-02	±5V	4 to 20mA
8B39-03	0 to +5V	0 to 20mA
8B39-04	±5V	0 to 20mA
8B39-07	±5V	-20 to 20mA

VOLTAGE INPUT MODULES, 1kHz BANDWIDTH Page 122

MODEL	INPUT RANGE	OUTPUT RANGE
8B40-01	±10mV	±5V
8B40-02	±50mV	±5V
8B40-03	±100mV	±5V
8B40-04	±10mV	0 to +5V
8B40-05	±50mV	0 to +5V
8B40-06	±100mV	0 to +5V
8B41-01	±1V	±5V
8B41-02	±5V	±5V
8B41-03	±10V	±5V
8B41-04	±1V	0 to +5V
8B41-05	±5V	0 to +5V
8B41-06	±10V	0 to +5V
8B41-07	±20V	±5V
8B41-08	±20V	0 to +5V
8B41-09	±40V	±5V
8B41-10	±40V	0 to +5V
8B41-12	±60V	±5V
8B41-13	±60V	0 to +5V

©1995-2017 Dataforth Corporation, All Rights Reserved ISO9001:2008-Registered QMS

8B Selection Guide (Continued)

2-WIRE TRANSMITTER INTERFACE MODULES Page 124

MODEL	INPUT RANGE	OUTPUT RANGE
8B42-01	4 to 20mA	0 to +5V
8B42-02	4 to 20mA	+1 to +5V

DC LVDT INPUT MODULES, 1kHz BANDWIDTH Page 126

MODEL	INPUT RANGE	OUTPUT RANGE
8B43-01	±1V	±5V
8B43-02	±2V	±5V
8B43-03	±3V	±5V
8B43-04	±4V	±5V
8B43-05	±5V	±5V
8B43-11	±1V	0 to +5V
8B43-12	±2V	0 to +5V
8B43-13	±3V	0 to +5V
8B43-14	±4V	0 to +5V
8B43-15	±5V	0 to +5V

FREQUENCY INPUT MODULES Page 128

MODEL	INPUT RANGE	OUTPUT RANGE
8B45-01	0 to 500Hz	0 to +5V
8B45-02	0 to 1kHz	0 to +5V
8B45-03	0 to 2.5kHz	0 to +5V
8B45-04	0 to 5kHz	0 to +5V
8B45-05	0 to 10kHz	0 to +5V
8B45-06	0 to 25kHz	0 to +5V
8B45-07	0 to 50kHz	0 to +5V
8B45-08	0 to 100kHz	0 to +5V

LINEARIZED THERMOCOUPLE INPUT MODULES (0 to +5V OUTPUT, 3Hz BW) Page 130

MODEL	TYPE	INPUT RANGE
8B47J-01	J	0°C to +760°C (+32°F to +1400°F)
8B47J-02	J	–100°C to +300°C (–148°F to +572°F)
8B47J-03	J	0°C to +500°C (+32°F to +932°F)
8B47J-12	J	–100°C to +760°C (–148°F to +1400°F)
8B47K-04	K	0°C to +1000°C (+32°F to +1832°F)
8B47K-05	K	0°C to +500°C (+32°F to +932°F)
8B47K-13	K	–100°C to +1350°C (–148°F to +2462°F)
8B47K-14	K	0°C to +1200°C (+32°F to +2192°F)
8B47T-06	T	–100°C to +400°C (–148°F to +752°F)
8B47T-07	T	0°C to +200°C (+32°F to +392°F)

VOLTAGE OUTPUT MODULES, 100Hz BANDWIDTH Page 132

MODEL	INPUT RANGE	OUTPUT RANGE
8B49-01	0 to +5V	±5V
8B49-02	±5V	±5V
8B49-03	±5V	0 to +5V
8B49-04	0 to +10V	±10V
8B49-05	±10V	±10V
8B49-06	±10V	0 to +10V
8B49-07	±5V	±10V

VOLTAGE INPUT MODULES, 20kHz BANDWIDTH Page 134

MODEL	INPUT RANGE	OUTPUT RANGE
8B50-01	±20mV	±5V
8B50-02	±50mV	±5V
8B50-03	±100mV	±5V
8B50-04	±20mV	0 to +5V
8B50-05	±50mV	0 to +5V
8B50-06	±100mV	0 to +5V
8B51-01	±1V	±5V
8B51-02	±5V	±5V
8B51-03	±10V	±5V
8B51-04	±1V	0 to +5V
8B51-05	±5V	0 to +5V
8B51-06	±10V	0 to +5V
8B51-07	±20V	±5V
8B51-08	±20V	0 to +5V
8B51-09	±40V	±5V
8B51-10	±40V	0 to +5V
8B51-12	±60V	±5V
8B51-13	±60V	0 to +5V

©1995-2017 Dataforth Corporation, All Rights Reserved ISO9001:2008-Registered QMS

8B Selection Guide (Continued)

ACCESSORIES Starts on Page 137

MODEL	DESCRIPTION
8BP01	Single channel DIN rail mount carrier
8BP02	Standard 2-channel backpanel
8BP02-1	8BP02 without cold junction compensation sensor
8BP02-2	8BP02 with DIN rail mounting option
8BP02-3	8BP02-1 with DIN rail mounting option
8BP04	Standard 4-channel backpanel
8BP04-1	8BP04 without cold junction compensation sensor
8BP04-2	8BP04 with DIN rail mounting option
8BP04-3	8BP04-1 with DIN rail mounting option
8BP08	Standard 8-channel backpanel
8BP08-1	8BP08 without cold junction compensation sensor
8BP08-2	8BP08 with DIN rail mounting option
8BP08-3	8BP08-1 with DIN rail mounting option
8BP16	Standard 16-channel backpanel
8BP16-1	8BP16 without cold junction compensation sensor
8BP16-2	8BP16 with DIN rail mounting option
8BP16-3	8BP16-1 with DIN rail mounting option
8BPWR-2	Power Supply Module
SCMXPRT-001	Power supply, 1A, 5VDC, 120VAC
SCMXPRE-001	Power supply, 1A, 5VDC, 220VAC
SCMXPRT-003	Power supply, 3A, 5VDC, 120VAC
SCMXPRE-003	Power supply, 3A, 5VDC, 220VAC
PWR-4505	Power supply, 5A, 5VDC, 85-264VAC
SCMXCA006-xx	System interface cable for backpanels
8BXIF	DB25 to screw terminal interface board
8BXCJC	Cold Junction Compensation sensor
8BPT	Non-isolated signal pass thru module
8B-PROTO	Breadboard kit
SCMXRK-002	19-inch metal rack for mounting backpanels
SCMXRAIL1-XX	DIN EN50022-35x7.5 (slotted steel), length -XX in meters
SCMXRAIL2-XX	DIN EN50035-G32 (slotted steel), length -XX in meters
SCMXRAIL3-XX	DIN EN50022-35x15 (slotted steel), length -XX in meters

‡THERMOCOUPLE ALLOY COMBINATIONS

STANDARDS: DIN IEC 584, ANSI MC96-1-82, JIS C 1602-1981

TYPE	MATERIAL
J	Iron vs. Copper-Nickel
K	Nickel-Chromium vs. Nickel-Aluminum
T	Copper vs. Copper-Nickel
R	Platinum-13% Rhodium vs. Platinum
S	Platinum-10% Rhodium vs. Platinum

****RTD STANDARDS**

TYPE	ALPHA COEFFICIENT	DIN	JIS	IEC
100Ω PT	0.00385	DIN 43760	JIS C 1604-1989	IEC 751
120Ω NI	0.00672			

Installation Notes:

1.) This Equipment is Suitable for Use in Class I, Division 2, Groups A, B,C, D, or Non-Hazardous Locations Only.

2.) WARNING - Explosion Hazard - Substitution of Any Components May Impair Suitability for Class I, Division 2.

3.) WARNING - Explosion Hazard - Do Not Disconnect Equipment Unless Power Has Been Switched Off or The Area is Known to be Non-Hazardous.

©1995-2017 Dataforth Corporation, All Rights Reserved ISO9001:2008-Registered QMS

8B30/31

Voltage Input Modules, Narrow Bandwidth

Description

8B modules are an optimal solution for monitoring real-world process signals and providing high-level signals to a data acquisition system. Each 8B30 or 8B31 module isolates, filters, and amplifies a voltage input signal and provides an analog voltage output (Figure 1).

Signal filtering is accomplished with a 5-pole filter optimized for time and frequency response which provides 70dB of normal-mode rejection at 60Hz. One pole of this filter is on the field side of the isolation barrier for anti-aliasing, and the other four are on the system side.

A special input circuit on the 8B30 and 8B31 modules provides protection against accidental connection of power-line voltages up to 240VAC. Clamp circuits on the I/O and power terminals protect against harmful transients.

Isolation is provided by transformer coupling to suppress transmission of common mode spikes or surges. The module is powered from +5VDC, ±5%.

The modules are designed for installation in Class I, Division 2 hazardous locations and have a high level of immunity to environmental noise.

Features

- Accepts Millivolt and Voltage Level Signals
- High-Level Voltage Outputs
- 1500Vrms Isolation
- ANSI/IEEE C37.90.1 Transient Protection
- Input Protection to 240VAC Continuous
- 120dB CMR
- 70dB NMR at 60Hz
- ±0.05% Accuracy
- ±0.02% Linearity
- Low Drift with Ambient Temperature
- C-UL-US Listed
- CE Compliant
- ATEX Compliance Pending
- Mix and Match Module Types on Backpanel

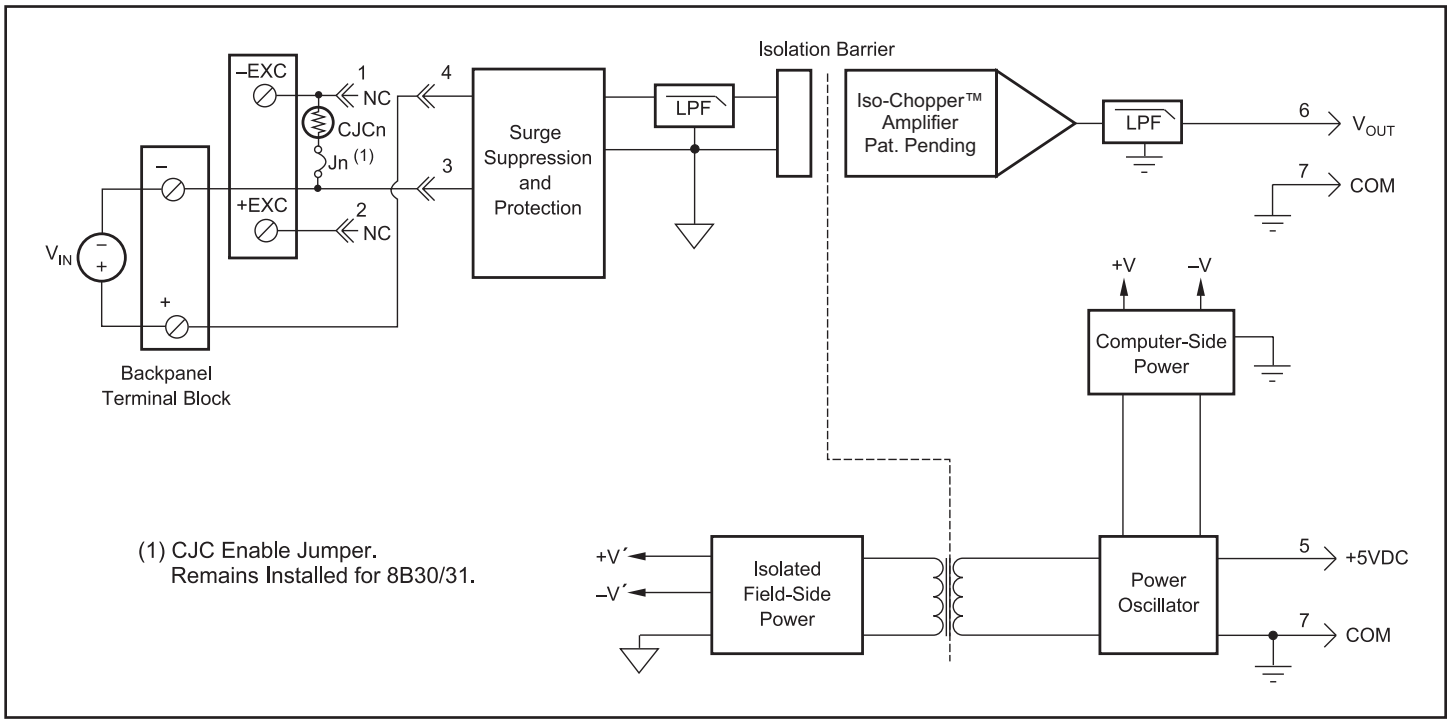

Figure 1: 8B30/31 Block Diagram

©1995-2017 Dataforth Corporation, All Rights Reserved ISO9001:2008-Registered QMS

Specifications

Typical* at T_A = +25°C and +5VDC power

Module	8B30	8B31
Input Range	±10mV to ±100mV	±1V to ±60V
Input Bias Current	±0.5nA	±0.05nA
Input Resistance		
Normal	50MΩ	500kΩ (minimum)
Power Off	100kΩ	500kΩ (minimum)
Overload	100kΩ	500kΩ (minimum)
Input Protection		
Continuous(1)	240VAC	240VAC
Transient	ANSI/IEEE C37.90.1	*
CMV, Input to Output	1500Vrms max	*
Transient, Input to Output	ANSI/IEEE C37.90.1	*
CMR (50Hz or 60Hz)	120dB	*
NMR	70dB at 60Hz	*
Accuracy(2)	±0.05% Span	*
Linearity	±0.02% Span	*
Stability		
Offset	±10ppm/°C	*
Gain	±50ppm/°C	±75ppm/°C
Noise		
Output, 100kHz	250µVrms	*
Bandwidth, –3dB	3Hz	*
Response Time, 90% Span	160ms	*
Output Range	See Ordering Information	*
Output Protection	Continuous Short to Ground	*
Transient	ANSI/IEEE C37.90.1	*
Power Supply Voltage	+5VDC ±5%	*
Power Supply Current	25mA	*
Power Supply Sensitivity	±75ppm/%	*
Mechanical Dimensions (h)(w)(d)	1.11" x 1.65" x 0.40" (28.1mm x 41.9mm x 10.2mm)	*
Environmental		
Operating Temp. Range	–40°C to +85°C	*
Storage Temp. Range	–40°C to +85°C	*
Relative Humidity	0 to 95% Noncondensing	*
Emissions EN61000-6-4	ISM, Group 1	*
Radiated, Conducted	Class A	*
Immunity EN61000-6-2	ISM, Group 1	*
RF	Performance A ±0.5% Span Error	*
ESD,EFT	Performance B	*

NOTES:
*Contact factory or your local Dataforth sales office for maximum values.
*Same specification as 8B30.
1) 240VAC between +Input terminal and –Input, +EXC, or –EXC terminals.
120VAC between –Input and +EXC or –EXC terminals.
120VAC between +EXC and –EXC terminals.
2) Includes linearity, hysteresis and repeatability.

Ordering Information

Model	Input Range	Output Range
8B30-01	–10mV to +10mV	–5V to +5V
8B30-02	–50mV to +50mV	–5V to +5V
8B30-03	–100mV to +100mV	–5V to +5V
8B30-04	–10mV to +10mV	0V to +5V
8B30-05	–50mV to +50mV	0V to +5V
8B30-06	–100mV to +100mV	0V to +5V
8B31-01	–1V to +1V	–5V to +5V
8B31-02	–5V to +5V	–5V to +5V
8B31-03	–10V to +10V	–5V to +5V
8B31-04	–1V to +1V	0V to +5V
8B31-05	–5V to +5V	0V to +5V
8B31-06	–10V to +10V	0V to +5V
8B31-07	–20V to +20V	–5V to +5V
8B31-08	–20V to +20V	0V to +5V
8B31-09	–40V to +40V	–5V to +5V
8B31-10	–40V to +40V	0V to +5V
8B31-12	–60V to +60V	–5V to +5V
8B31-13	–60V to +60V	0V to +5V

Installation Notes:

1.) This Equipment is Suitable for Use in Class I, Division 2, Groups A, B,C, D, or Non-Hazardous Locations Only.

2.) WARNING - Explosion Hazard - Substitution of Any Components May Impair Suitability for Class I, Division 2.

3.) WARNING - Explosion Hazard - Do Not Disconnect Equipment Unless Power Has Been Switched Off or The Area is Known to be Non-Hazardous.

©1995-2017 Dataforth Corporation, All Rights Reserved ISO9001:2008-Registered QMS

8B32

Current Input Modules

Description

8B modules are an optimal solution for monitoring real-world process signals and providing high-level signals to a data acquisition system. Each 8B32 module isolates, filters, and amplifies a process current input signal and provides an analog voltage output (Figure 1).

Current to voltage conversion is accomplished internal to the module to ensure high accuracy.

Signal filtering is accomplished with a 3-pole filter optimized for time and frequency response which provides 70dB of normal-mode rejection at 60Hz. One pole of this filter is on the field side of the isolation barrier for anti-aliasing, and the other two are on the system side.

A special input circuit on the 8B32 module provides protection against accidental connection of power-line voltages up to 40VAC. Clamp circuits on the I/O and power terminals protect against harmful transients.

Isolation is provided by transformer coupling to suppress transmission of common mode spikes or surges. The module is powered from +5VDC, ±5%.

The modules are designed for installation in Class I, Division 2 hazardous locations and have a high level of immunity to environmental noise.

Features

- Accepts Milliamp Level Signals
- High-Level Voltage Outputs
- 1500Vrms Isolation
- ANSI/IEEE C37.90.1 Transient Protection
- Input Protection to 40VAC Continuous
- 120dB CMR
- 70dB NMR at 60Hz
- ±0.05% Accuracy
- ±0.02% Linearity
- Low Drift with Ambient Temperature
- C-UL-US Listed
- CE Compliant
- ATEX Compliance Pending
- Mix and Match Module Types on Backpanel

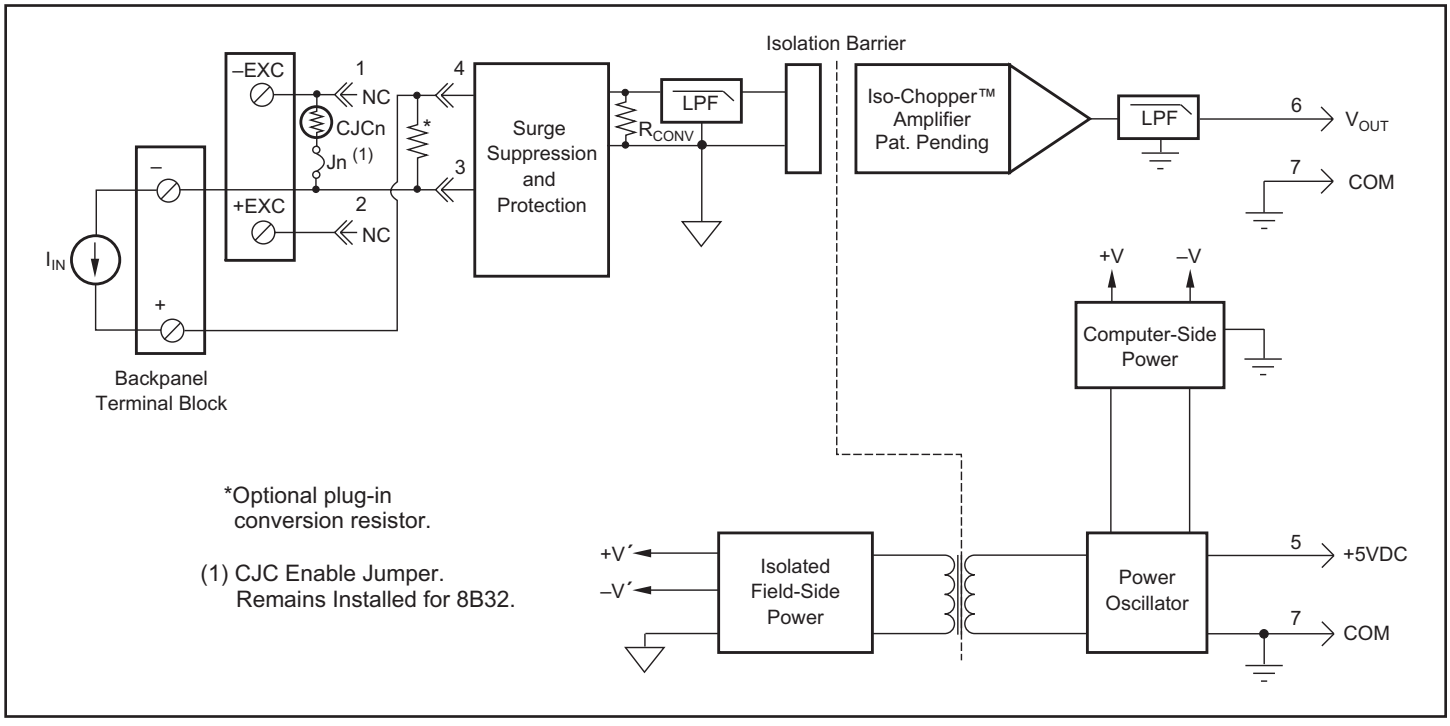

Figure 1: 8B32 Block Diagram

©1995-2017 Dataforth Corporation, All Rights Reserved ISO9001:2008-Registered QMS

Specifications

Typical* at T_A = +25°C and +5VDC power

Module	8B32
Input Range	0mA to 20mA or 4mA to 20mA
Input Resistance	
Normal	<50Ω
Power Off	<50Ω
Input Protection	
Continuous	40VAC
Transient	ANSI/IEEE C37.90.1
CMV, Input to Output	1500Vrms max
Transient, Input to Output	ANSI/IEEE C37.90.1
CMR (50Hz or 60Hz)	120dB
NMR	70dB at 60Hz
Accuracy(1)	±0.05% Span
Linearity	±0.02% Span
Stability	
Offset	±25ppm/°C
Gain	±50ppm/°C
Noise	
Output, 100kHz	250µVrms
Bandwidth, –3dB	3Hz
Response Time, 90% Span	150ms
Output Range	0V to +5V
Output Protection	Continuous Short to Ground
Transient	ANSI/IEEE C37.90.1
Power Supply Voltage	+5VDC ±5%
Power Supply Current	30mA
Power Supply Sensitivity	±75ppm/%
Mechanical Dimensions (h)(w)(d)	1.11" x 1.65" x 0.40" (28.1mm x 41.9mm x 10.2mm)
Environmental	
Operating Temperature Range	–40°C to +85°C
Storage Temperature Range	–40°C to +85°C
Relative Humidity	0 to 95% Noncondensing
Emissions EN61000-6-4	ISM, Group 1
Radiated, Conducted	Class A
Immunity EN61000-6-2	ISM, Group 1
RF	Performance A ±0.5% Span Error
ESD, EFT	Performance B

NOTES:
*Contact factory or your local Dataforth sales office for maximum values.
(1) Includes linearity, hysteresis and repeatability.

Ordering Information

Model	Input Range	Output Range
8B32-01	4mA to 20mA	0V to +5V
8B32-02	0mA to 20mA	0V to +5V

Installation Notes:

1.) This Equipment is Suitable for Use in Class I, Division 2, Groups A, B,C, D, or Non-Hazardous Locations Only.

2.) WARNING - Explosion Hazard - Substitution of Any Components May Impair Suitability for Class I, Division 2.

3.) WARNING - Explosion Hazard - Do Not Disconnect Equipment Unless Power Has Been Switched Off or The Area is Known to be Non-Hazardous.

©1995-2017 Dataforth Corporation, All Rights Reserved ISO9001:2008-Registered QMS

8B33

Isolated True RMS Input Modules

Description

Each 8B33 True RMS input module provides a single channel of AC input which is converted to its True RMS DC value, filtered, isolated, amplified, and converted to a standard process voltage output (Figure 1).

The field voltage or current input signal is processed through a pre-amplifier and RMS converter on the field side of the isolation barrier. The converted DC signal is then chopped by a proprietary chopper circuit and transferred across the transformer isolation barrier, suppressing transmission of common mode spikes and surges. The computer side circuitry reconstructs, filters, and converts the signal to an industry standard output of 0 to 5VDC.

Special input circuits provide protection against accidental connection of power line voltages up to 350VAC and against transient events defined by ANSI/IEEE C37.90.1.

WARNING: The SensorLex 8B33 interfaces to hazardous voltages and should only be wired by qualified personnel or licensed electricians.

Features

- Interfaces to RMS Voltage (0-300V) or RMS Current (0-1A)
- Designed for Standard Operation with Frequencies of 45Hz to 1000Hz (Extended Range to 10kHz)
- Compatible with Standard Current and Potential Transformers
- Industry Standard Output of 0 to 5VDC
- ±0.25% Factory Calibrated Accuracy
- 1500Vrms Transformer Isolation
- Input Overload Protected to 350Vrms Max (Peak AC & DC) or 2Arms Continuous
- 120dB CMR
- ANSI/IEEE C37.90.1 Transient Protection
- C-UL-US Listed
- CE Compliant
- ATEX Compliance Pending
- Mix and Match Module Types on Backpanel

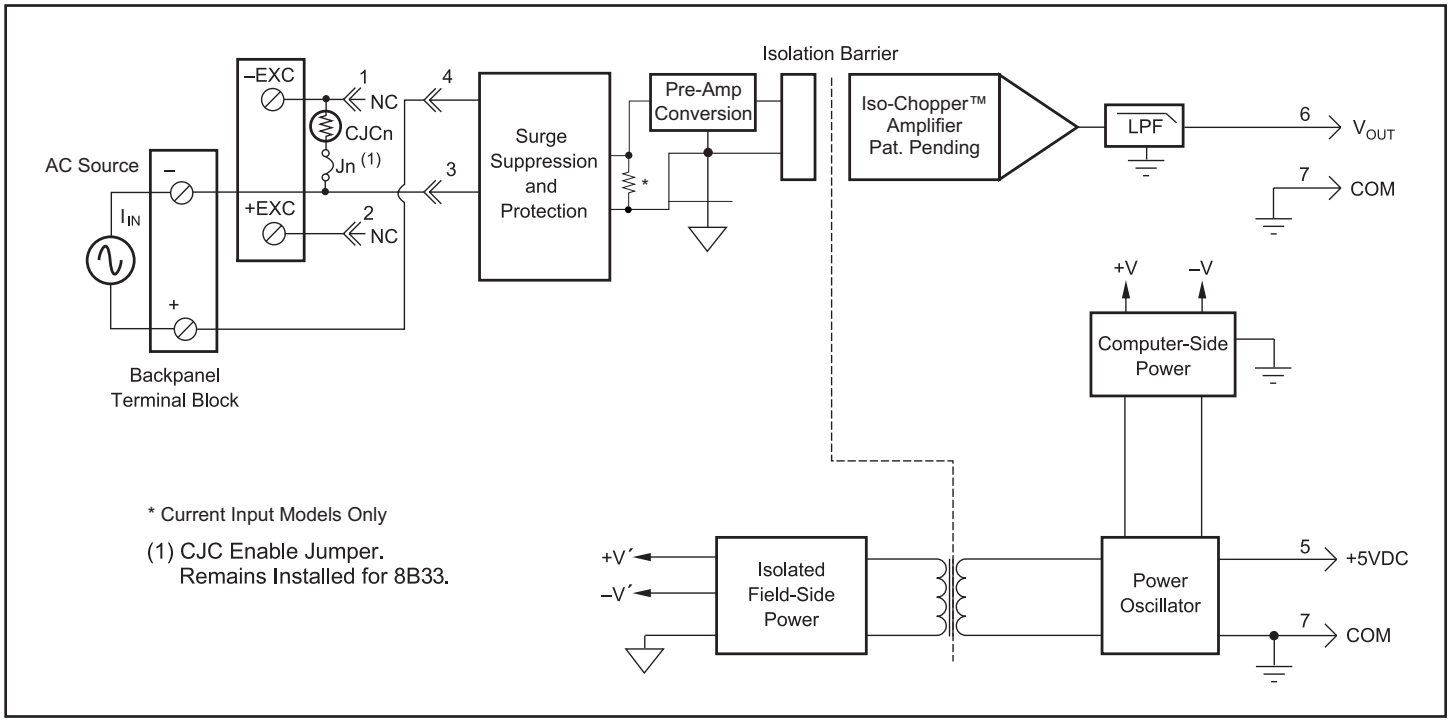

Figure 1: 8B33 Block Diagram

©1995-2017 Dataforth Corporation, All Rights Reserved ISO9001:2008-Registered QMS

Specifications

Typical* at T_A = +25°C and +5VDC power

Module	8B33
Input	
Signal Range	100mV to 300Vrms, 0 to 1Arms
Standard Frequency Range	45Hz to 1000Hz
Extended Frequency Range	1kHz to 10kHz
Impedance	499KΩ (–01, –02) 1MΩ (–03, –04, –05) .05Ω (–06)
Coupling	AC
Protection (1)	
Continuous (–01 thru –05)	350Vrms
Continuous (–06)	2Arms
Transient (–01 thru –05)	ANSI/IEEE C37.90.1
Transient (–06)	See note 2
Output	
Signal Range	0V to 5V
Voltage Limit	±9V
Protection	Continuous Short to Ground
Ripple and Noise	0.0375% Span rms
Accuracy (5-100% Span)(3) (4)	
Sinusoid	
50/60Hz	±0.25% Span
45Hz to 1kHz	±0.625% Span
1kHz to 10kHz	±1.375% Span, ±3.25% Span(-06)
Non-Sinusoid	
Crest Factor = 1	±0.25% Span
Crest Factor = 2	±0.325% Span
Crest Factor = 3	±0.475% Span
Crest Factor = 4	±0.7% Span
Vs. Temperature	±100ppm/ºC
Isolation (Common Mode)	
Input to Output, Input to Power	
Continuous	1500Vrms max
Transient	ANSI/IEEE C37.90.1
CMR (50Hz to 60Hz)	120dB
Response Time, 90% Span	<120mS
Supply Voltage	+5VDC ±5%
Current	30mA
Sensitivity	±200ppm/%
Mechanical Dimensions (h)(w)(d)	1.11" x 1.65" x 0.40" (28.1mm x 41.9mm x 10.2mm)
Environmental	
Operating Temperature Range	–40ºC to +85ºC
Storage Temperature Range	–40ºC to +85ºC
Relative Humidity	0 to 90% Noncondensing
Emissions EN61000-6-4	ISM, Group 1
Radiated, Conducted	Class A
Immunity EN61000-6-2	ISM, Group 1
RF	Performance A ±0.5% Span Error
ESD, EFT, Surge, Voltage Dips	Performance B

NOTES:
*Contact factory or your local Dataforth sales office for maximum values.
(1) 8B33 and 8BP01, 8BP02, 8BP04, 8BP08, 8BP16, XEV rating only. Backpanels obtained from other sources may have lower ratings.
(2) For 1 to 25 seconds the max allowable transient current rating is $\sqrt{2500/(\text{event time})}$. For less than 1 second, ANSI/IEEE C37.90.1 applies with a 0.05 Ω load. For greater than 25 seconds, the 2 Arms continous rating applies.
(3) At standard 60Hz factory calibration. Consult factory for calibration at other frequencies.
(4) For 0-5% Span measurements add 1% accuracy error (-02, -03, -04, -05) or 1.5% accuracy error (-01, -06). Accuracy error includes linearity, hysteresis and repeatability but not source or external shunt inaccuracy (if used).

Ordering Information

Model	Input Range	Output Range
8B33-01	0mV to 100mV	0V to +5V
8B33-02	0V to 1V	0V to +5V
8B33-03	0V to 10V	0V to +5V
8B33-04	0V to 150V	0V to +5V
8B33-05	0V to 300V	0V to +5V
8B33-06	0A to 1A	0V to +5V

Installation Notes:

1.) This Equipment is Suitable for Use in Class I, Division 2, Groups A, B,C, D, or Non-Hazardous Locations Only.

2.) WARNING - Explosion Hazard - Substitution of Any Components May Impair Suitability for Class I, Division 2.

3.) WARNING - Explosion Hazard - Do Not Disconnect Equipment Unless Power Has Been Switched Off or The Area is Known to be Non-Hazardous.

©1995-2017 Dataforth Corporation, All Rights Reserved ISO9001:2008-Registered QMS

8B34

Linearized 2- or 3-Wire RTD Input Modules

Description

8B modules are an optimal solution for monitoring real-world process signals and providing high-level signals to a data acquisition system. Each 8B34 input module isolates, filters, amplifies, and linearizes a single channel of temperature input from an RTD and provides an analog voltage output (Figure 1).

RTD excitation is provided from the module using two matched current sources. When using a 3-wire connection, this method allows equal currents to flow through the sensor leads, canceling the effects of lead resistances.The excitation currents are small (0.25mA) which minimizes self-heating of the RTD.

Signal filtering is accomplished with a 3-pole filter optimized for time and frequency response which provides 70dB of normal-mode rejection at 60Hz. One pole of this filter is on the field side of the isolation barrier for anti-aliasing, and the other two are on the system side.

A special input circuit on the 8B34 module provides protection against accidental connection of power-line voltages up to 240VAC. Clamp circuits on the I/O and power terminals protect against harmful transients.

The modules are designed for installation in Class I, Division 2 hazardous locations and have a high level of immunity to environmental noise.

Features

- Interfaces to 100Ω Platinum RTDs
- Linearizes RTD Signal
- High-Level Voltage Outputs
- 1500Vrms Isolation
- ANSI/IEEE C37.90.1 Transient Protection
- Input Protection to 240VAC Continuous
- 120dB CMR
- 70dB NMR at 60Hz
- Low Drift with Ambient Temperature
- C-UL-US Listed
- CE Compliant
- ATEX Compliance Pending
- Mix and Match Module Types on Backpanel

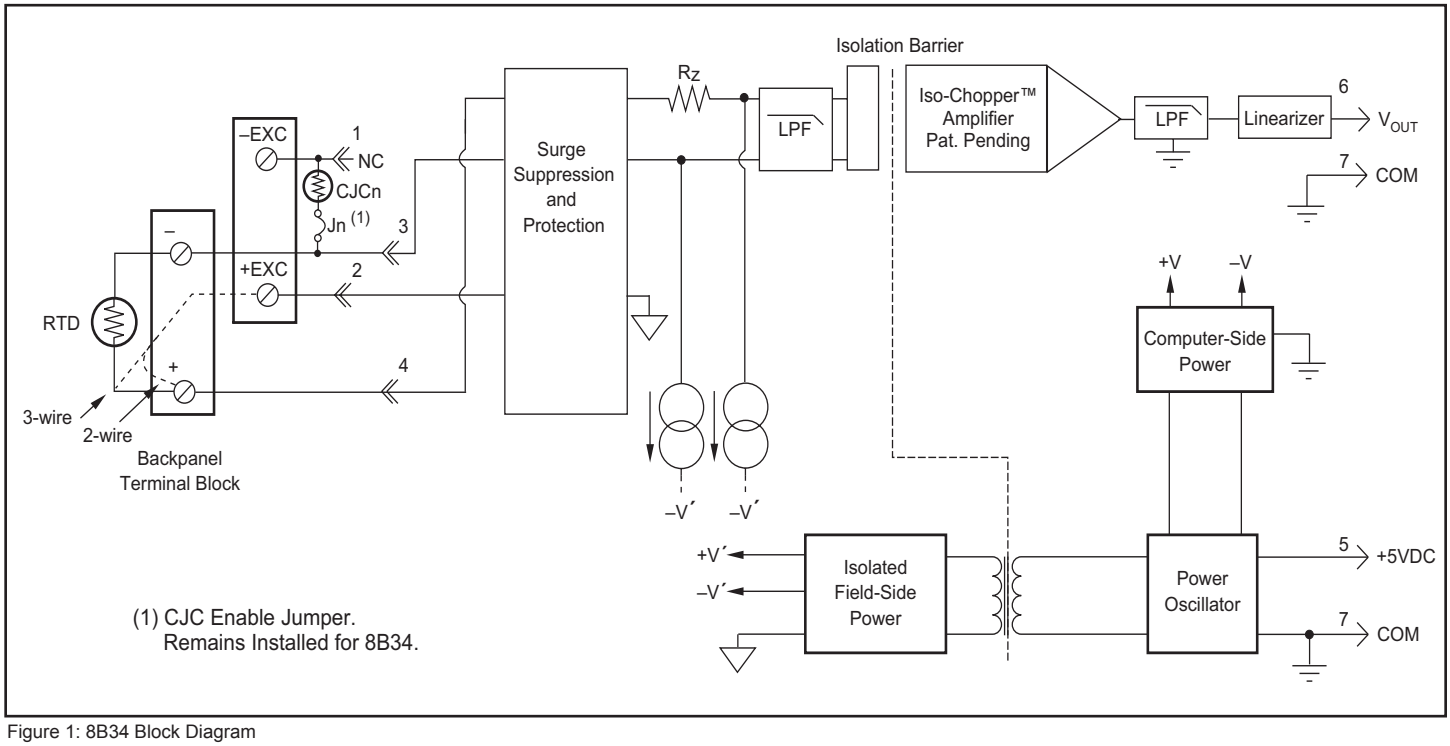

Figure 1: 8B34 Block Diagram

©1995-2017 Dataforth Corporation, All Rights Reserved ISO9001:2008-Registered QMS

Specifications

Typical* at T_A = +25°C and +5VDC power

Module	8B34
Input Range Limits	–200°C to +850°C (100Ω Pt)
Input Resistance	
Normal	50MΩ
Power Off	200kΩ
Overload	200kΩ
Input Protection	
Continuous(1)	240VAC
Transient	ANSI/IEEE C37.90.1
Sensor Excitation Current	0.25mA
Lead Resistance Effect	±0.02°C/Ω(2)
CMV, Input to Output	1500Vrms max
Transient, Input to Output	ANSI/IEEE C37.90.1
CMR (50 or 60Hz)	120dB
NMR	70dB at 60Hz
Accuracy	See Ordering Information
Stability	
Offset	±20ppm/°C
Gain	±50ppm/°C
Noise	
Output, 100kHz	200µVrms
Bandwidth, –3dB	3Hz
Response Time, 90% Span	150ms
Output Range	See Ordering Information
Output Protection	Continuous Short to Ground
Transient	ANSI/IEEE C37.90.1
Open Input Response	Downscale
Open Input Detection Time	1s
Power Supply Voltage	+5VDC ±5%
Power Supply Current	25mA
Power Supply Sensitivity	±75ppm/%
Mechanical Dimensions (h)(w)(d)	1.11" x 1.65" x 0.40" (28.1mm x 41.9mm x 10.2mm)
Environmental	
Operating Temperature Range	–40°C to +85°C
Storage Temperature Range	–40°C to +85°C
Relative Humidity	0 to 95% Noncondensing
Emissions EN61000-6-4	ISM, Group 1
Radiated, Conducted	Class A
Immunity EN61000-6-2	ISM, Group 1
RF	Performance A ±0.5% Span Error
ESD, EFT	Performance B

NOTES :
*Contact factory or your local Dataforth sales office for maximum values.
(1) 240VAC between +Input terminal and –Input, +EXC, or –EXC terminals.
120VAC between –Input and +EXC or –EXC terminals.
120VAC between +EXC and –EXC terminals.
(2) "Ω" refers to the resistance in one lead.
(3) Includes conformity, hysteresis and repeatability.

Ordering Information

Model	Input Range	Output Range	Accuracy(3)
100Ω Pt **			
8B34-01	–100°C to +100°C (–148°F to +212°F)	0V to +5V	±0.20°C
8B34-02	0°C to +100°C (+32°F to +212°F)	0V to +5V	±0.10°C
8B34-03	0°C to +200°C (+32°F to +392°F)	0V to +5V	±0.20°C
8B34-04	0°C to +600°C (+32°F to +1112°F)	0V to +5V	±0.45°C

**RTD Standards

Type	Alpha Coefficient	DIN	JIS	IEC
100Ω Pt	0.00385	DIN 43760	JIS C 1604-1989	IEC 751

Installation Notes:

1.) This Equipment is Suitable for Use in Class I, Division 2, Groups A, B,C, D, or Non-Hazardous Locations Only.

2.) WARNING - Explosion Hazard - Substitution of Any Components May Impair Suitability for Class I, Division 2.

3.) WARNING - Explosion Hazard - Do Not Disconnect Equipment Unless Power Has Been Switched Off or The Area is Known to be Non-Hazardous.

©1995-2017 Dataforth Corporation, All Rights Reserved ISO9001:2008-Registered QMS

8B35

Linearized 4-Wire RTD Input Modules

Description

8B modules are an optimal solution for monitoring real-world process signals and providing high-level signals to a data acquisition system. Each 8B35 input module isolates, filters, amplifies, and linearizes a single channel of temperature input from an RTD and provides an analog voltage output (Figure 1).

RTD excitation is provided from the module using a precision current source. Excitation current does not flow in the input signal leads, which allows RTD measurements to be made independently of lead resistance. The excitation currents are small (0.25mA) which minimizes self-heating of the RTD.

Signal filtering is accomplished with a 3-pole filter optimized for time and frequency response which provides 70dB of normal-mode rejection at 60Hz. One pole of this filter is on the field side of the isolation barrier for anti-aliasing, and the other two are on the system side.

A special input circuit on the 8B35 module provides protection against accidental connection of power-line voltages up to 240VAC. Clamp circuits on the I/O and power terminals protect against harmful transients.

The modules are designed for installation in Class I, Division 2 hazardous locations and have a high level of immunity to environmental noise.

Features

- Interfaces to 100Ω Platinum RTDs
- True 4-Wire Input
- Linearizes RTD Signal
- High-Level Voltage Outputs
- 1500Vrms Isolation
- ANSI/IEEE C37.90.1 Transient Protection
- Input Protection to 240VAC Continuous
- 120dB CMR
- 70dB NMR at 60Hz
- Low Drift with Ambient Temperature
- C-UL-US Listed
- CE Compliant
- ATEX Compliance Pending
- Mix and Match Module Types on Backpanel

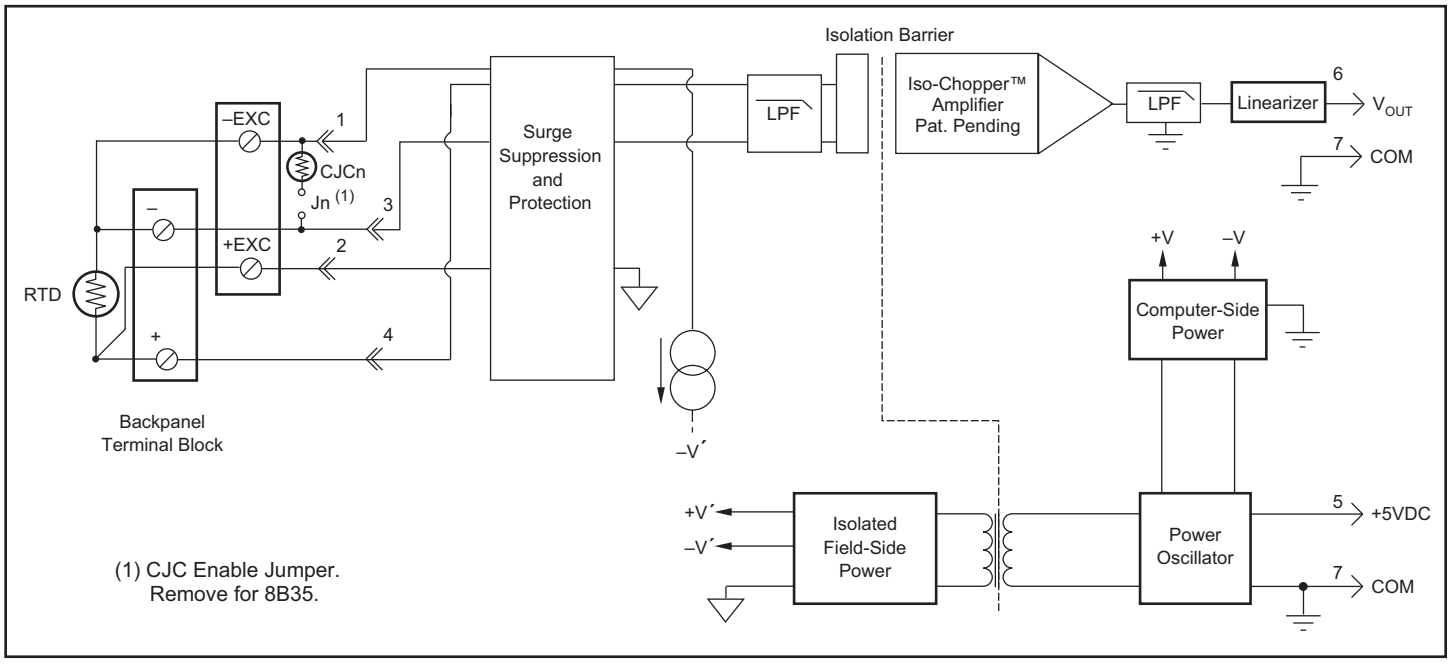

Figure 1: 8B35 Block Diagram

©1995-2017 Dataforth Corporation, All Rights Reserved ISO9001:2008-Registered QMS

Specifications

Typical* at T_A = +25°C and +5VDC power

Module	8B35
Input Range Limits	–200°C to +850°C (100Ω Pt)
Input Resistance	
Normal	50MΩ
Power Off	200kΩ
Overload	200kΩ
Input Protection	
Continuous(1)	240VAC
Transient	ANSI/IEEE C37.90.1
Sensor Excitation Current	0.25mA
Lead Resistance Effect	±0.005°C/Ω(2)
CMV, Input to Output	1500Vrms max
Transient, Input to Output	ANSI/IEEE C37.90.1
CMR (50 or 60Hz)	120dB
NMR	70dB at 60Hz
Accuracy	See Ordering Information
Stability	
Offset	±20ppm/°C
Gain	±50ppm/°C
Noise	
Output, 100kHz	200µVrms
Bandwidth, –3dB	3Hz
Response Time, 90% Span	150ms
Output Range	See Ordering Information
Output Protection	Continuous Short to Ground
Transient	ANSI/IEEE C37.90.1
Open Input Response	
+EXC, –EXC lead	Downscale, 1s
–IN lead	Downscale, 40s
+IN lead	Upscale, 40s
Power Supply Voltage	+5VDC ±5%
Power Supply Current	25mA
Power Supply Sensitivity	±75ppm/%
Mechanical Dimensions (h)(w)(d)	1.11" x 1.65" x 0.40" (28.1mm x 41.9mm x 10.2mm)
Environmental	
Operating Temperature Range	–40°C to +85°C
Storage Temperature Range	–40°C to +85°C
Relative Humidity	0 to 95% Noncondensing
Emissions EN61000-6-4	ISM, Group 1
Radiated, Conducted	Class A
Immunity EN61000-6-2	ISM, Group 1
RF	Performance A ±0.5% Span Error
ESD, EFT	Performance B

NOTES :
*Contact factory or your local Dataforth sales office for maximum values.
(1) 240VAC between +Input terminal and –Input, +EXC, or –EXC terminals.
120VAC between –Input and +EXC or –EXC terminals.
120VAC between +EXC and –EXC terminals.
(2) "Ω" refers to the resistance in one lead.
(3) Includes conformity, hysteresis and repeatability.

Ordering Information

Model	Input Range	Output Range	Accuracy(3)
100Ω Pt **			
8B35-01	–100°C to +100°C (–148°F to +212°F)	0V to +5V	±0.20°C
8B35-02	0°C to +100°C (+32°F to +212°F)	0V to +5V	±0.10°C
8B35-03	0°C to +200°C (+32°F to +392°F)	0V to +5V	±0.20°C
8B35-04	0°C to +600°C (+32°F to +1112°F)	0V to +5V	±0.45°C

**RTD Standards

Type	Alpha Coefficient	DIN	JIS	IEC
100Ω Pt	0.00385	DIN 43760	JIS C 1604-1989	IEC 751

Installation Notes:

1.) This Equipment is Suitable for Use in Class I, Division 2, Groups A, B,C, D, or Non-Hazardous Locations Only.

2.) WARNING - Explosion Hazard - Substitution of Any Components May Impair Suitability for Class I, Division 2.

3.) WARNING - Explosion Hazard - Do Not Disconnect Equipment Unless Power Has Been Switched Off or The Area is Known to be Non-Hazardous.

©1995-2017 Dataforth Corporation, All Rights Reserved ISO9001:2008-Registered QMS

8B36

Potentiometer Input Modules

Description

8B modules are an optimal solution for monitoring real-world process signals and providing high-level signals to a data acquisition system. Each 8B36 input module isolates, filters, and amplifies a single channel of potentiometer input and provides an analog voltage output (Figure 1).

Excitation for the potentiometer is provided by using two matched current sources. When using a 3-wire connection, this method allows equal currents to flow through the sensor leads, canceling the effects of lead resistances.The excitation currents are small (equal to or less than 0.25mA) which minimizes self-heating of the potentiometer.

Signal filtering is accomplished with a 3-pole filter optimized for time and frequency response which provides 70dB of normal-mode rejection at 60Hz. One pole of this filter is on the field side of the isolation barrier for anti-aliasing, and the other two are on the system side.

A special input circuit on the 8B36 module provides protection against accidental connection of power-line voltages up to 240VAC. Clamp circuits on the I/O and power terminals protect against harmful transients.

The modules are designed for installation in Class I, Division 2 hazardous locations and have a high level of immunity to environmental noise.

Features

- Interfaces to Potentiometers up to 10,000Ω
- High-Level Voltage Output
- 1500Vrms Isolation
- ANSI/IEEE C37.90.1 Transient Protection
- Input Protection to 240VAC Continuous
- 120dB CMR
- 70dB NMR at 60Hz
- ±0.05% Accuracy
- ±0.02% Linearity
- Low Drift with Ambient Temperature
- C-UL-US Listed
- CE Compliant
- ATEX Compliance Pending
- Mix and Match Module Types on Backpanel

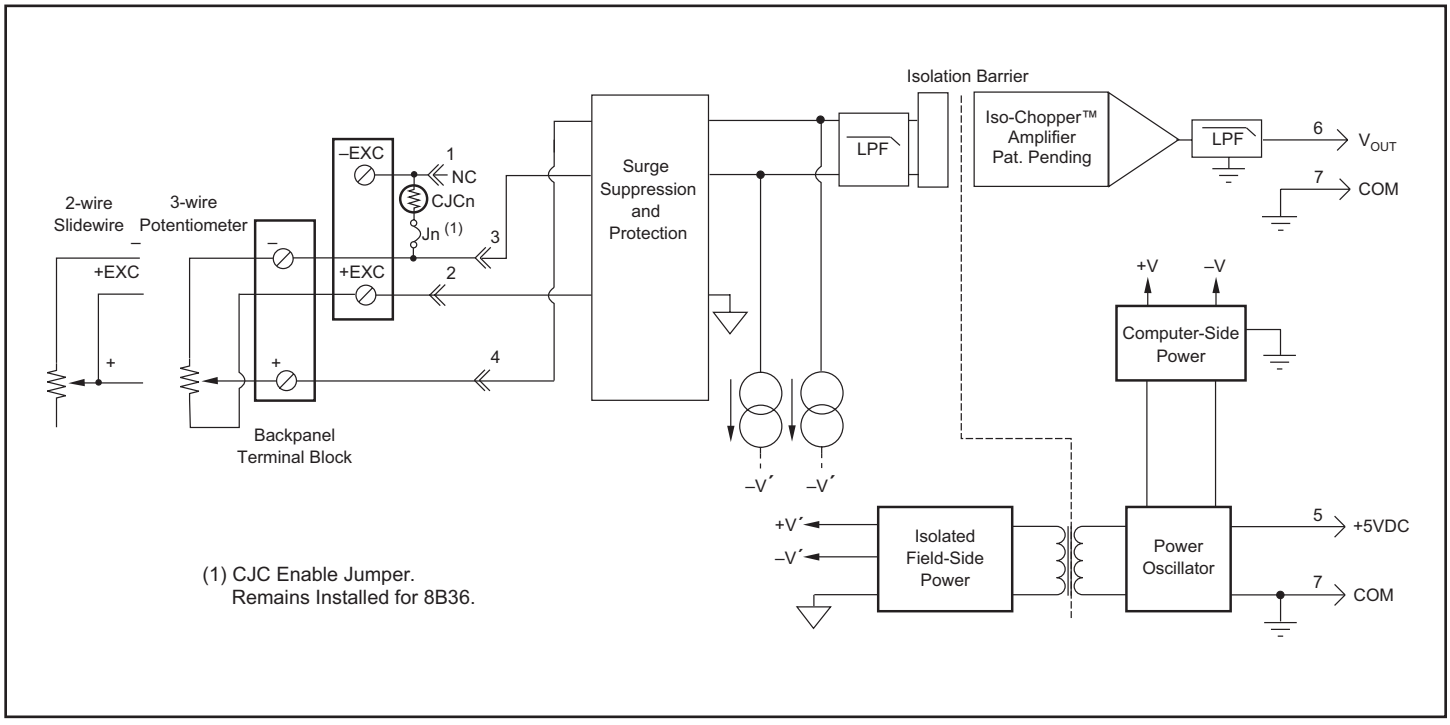

Figure 1: 8B36 Block Diagram

©1995-2017 Dataforth Corporation, All Rights Reserved ISO9001:2008-Registered QMS

Specifications

Typical* at T_A = +25°C and +5VDC power

Module	8B36
Input Range	0 to 10kΩ
Input Resistance	
Normal	50MΩ
Power Off	200kΩ
Overload	200kΩ
Input Protection	
Continuous(1)	240VAC
Transient	ANSI/IEEE C37.90.1
Sensor Excitation Current	0.25mA; 100Ω, 500Ω, 1kΩ Sensor 0.10mA; 10kΩ Sensor
Lead Resistance Effect	±0.01Ω/Ω; 100Ω, 500Ω, 1kΩ Sensor ±0.02Ω/Ω; 10kΩ Sensor
CMV, Input to Output	1500Vrms max
Transient, Input to Output	ANSI/IEEE C37.90.1
CMR (50 or 60Hz)	120dB
NMR	70dB at 60Hz
Accuracy(2)	±0.05% Span
Linearity	±0.02% Span
Stability	
Offset	±20ppm/°C
Gain	±50ppm/°C
Noise	
Output, 100kHz	200µVrms
Bandwidth, –3dB	3Hz
Response Time, 90% Span	150ms
Output Range	0V to +5V
Output Protection	Continuous Short to Ground
Transient	ANSI/IEEE C37.90.1
Open Input Response	Downscale
Open Input Detection Time	1s
Power Supply Voltage	+5VDC ±5%
Power Supply Current	25mA
Power Supply Sensitivity	±75ppm/%
Mechanical Dimensions (h)(w)(d)	1.11" x 1.65" x 0.40" (28.1mm x 41.9mm x 10.2mm)
Environmental	
Operating Temperature Range	–40°C to +85°C
Storage Temperature Range	–40°C to +85°C
Relative Humidity	0 to 95% Noncondensing
Emissions EN61000-6-4	ISM, Group 1
Radiated, Conducted	Class A
Immunity EN61000-6-2	ISM, Group 1
RF	Performance A ±0.5% Span Error
ESD, EFT	Performance B

NOTES:
*Contact factory or your local Dataforth sales office for maximum values.
(1) 240VAC between +Input terminal and –Input, +EXC, or –EXC terminals.
120VAC between –Input and +EXC or –EXC terminals.
120VAC between +EXC and –EXC terminals.
(2) Includes linearity, hysteresis and repeatability.

Ordering Information

Model	Input Range	Output Range
8B36-01	0 to 100Ω	0V to +5V
8B36-02	0 to 500Ω	0V to +5V
8B36-03	0 to 1kΩ	0V to +5V
8B36-04	0 to 10kΩ	0V to +5V

Installation Notes:

1.) This Equipment is Suitable for Use in Class I, Division 2, Groups A, B,C, D, or Non-Hazardous Locations Only.

2.) WARNING - Explosion Hazard - Substitution of Any Components May Impair Suitability for Class I, Division 2.

3.) WARNING - Explosion Hazard - Do Not Disconnect Equipment Unless Power Has Been Switched Off or The Area is Known to be Non-Hazardous.

©1995-2017 Dataforth Corporation, All Rights Reserved ISO9001:2008-Registered QMS

8B37

Non-Linearized Thermocouple Input Modules

Description

8B modules are an optimal solution for monitoring real-world process signals and providing high-level signals to a data acquisition system. Each 8B37 nonlinearized module isolates, filters, and amplifies a single channel of temperature input from a thermocouple input signal and provides an analog voltage output (Figure 1).

The 8B37 can interface to industry standard thermocouple types J, K, T, R, and S and has an output signal of 0 to +5V. Each module is coldjunction compensated to correct for parasitic thermocouples formed by the thermocouple wire and screw terminals on the mounting backpanel. Upscale open thermocouple detect is provided by an internal pull-up resistor.

Signal filtering is accomplished with a 3-pole filter optimized for time and frequency response which provides 70dB of normal-mode rejection at 60Hz. One pole of this filter is on the field side of the isolation barrier for anti-aliasing, and the other two are on the system side.

A special input circuit on the 8B37 module provides protection against accidental connection of power-line voltages up to 240VAC. Clamp circuits on the I/O and power terminals protect against harmful transients.

The modules are designed for installation in Class I, Division 2 hazardous locations and have a high level of immunity to environmental noise.

Features

- Interfaces to Types J, K, T, R, and S Thermocouples
- High-Level Voltage Output
- 1500Vrms Isolation
- ANSI/IEEE C37.90.1 Transient Protection
- Input Protection to 240VAC Continuous
- 120dB CMR
- 70dB NMR at 60Hz
- ±0.05% Accuracy
- ±0.02% Linearity
- Low Drift with Ambient Temperature
- Accurate CJC –40°C to +85°C
- C-UL-US Listed
- CE Compliant
- ATEX Compliance Pending
- Mix and Match Module Types on Backpanel

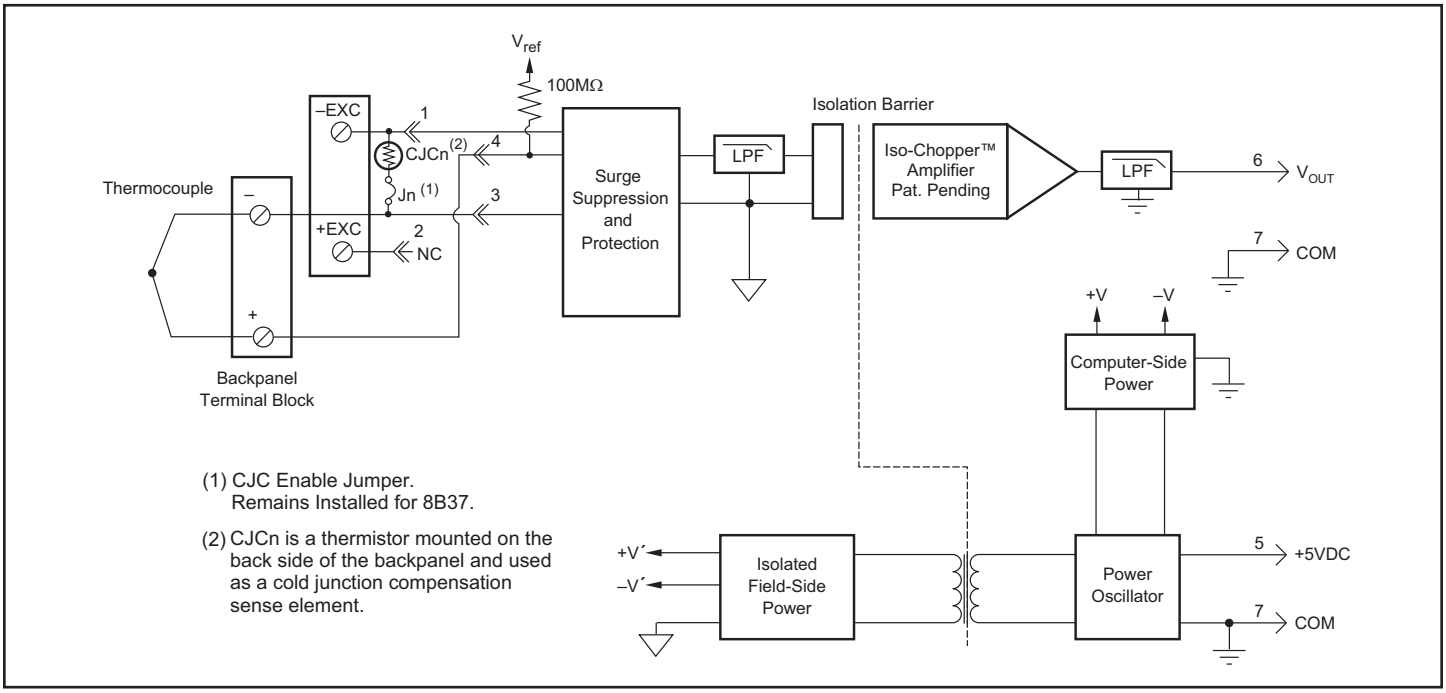

Figure 1: 8B37 Block Diagram

©1995-2017 Dataforth Corporation, All Rights Reserved ISO9001:2008-Registered QMS

Specifications

Typical* at T_A = +25°C and +5VDC power

Module	8B37
Input Range	See Ordering Information
Input Bias Current	–25nA
Input Resistance	
Normal	50MΩ
Power Off	200kΩ
Overload	200kΩ
Input Protection	
Continuous(1)	240VAC
Transient	ANSI/IEEE C37.90.1
CMV, Input to Output	1500Vrms max
Transient, Input to Output	ANSI/IEEE C37.90.1
CMR (50Hz or 60Hz)	120dB
NMR	70dB at 60Hz
Accuracy	See Ordering Information
Linearity	±0.02% Span
Stability	
Offset	±20ppm/°C
Gain	±50ppm/°C
Noise	
Output, 100kHz	250µVrms
Bandwidth, –3dB	3Hz
Response Time, 90% Span	150ms
Output Range	0V to +5V
Output Protection	Continuous Short to Ground
Transient	ANSI/IEEE C37.90.1
Cold Junction Compensation	
Accuracy, 25°C	±0.5°C
Accuracy, –40°C to +85°C (J,K,T)	±1.5°C
Accuracy, –20°C to +65°C (R,S)	±3.0°C
Accuracy, –40°C to +85°C (R,S)	±5.0°C
Open Input Response	Upscale
Open Input Detection Time	<10s
Power Supply Voltage	+5VDC ±5%
Power Supply Current	30mA
Power Supply Sensitivity	±75ppm/%
Mechanical Dimensions (h)(w)(d)	1.11" x 1.65" x 0.40" (28.1mm x 41.9mm x 10.2mm)
Environmental	
Operating Temperature Range	–40°C to +85°C
Storage Temperature Range	–40°C to +85°C
Relative Humidity	0 to 95% Noncondensing
Emissions EN61000-6-4	ISM, Group 1
Radiated, Conducted	Class A
Immunity EN61000-6-2	ISM, Group 1
RF	Performance A ±0.5% Span Error
ESD, EFT	Performance B

NOTES:
*Contact factory or your local Dataforth sales office for maximum values.
(1) 240VAC between +Input terminal and –Input, +EXC, or –EXC terminals.
120VAC between –Input and +EXC or –EXC terminals.
120VAC between +EXC and –EXC terminals.
(2) Includes linearity, hysteresis and repeatability. Does not include CJC accuracy.

Ordering Information

Model	TC Type‡	Input Range	Output Range	Accuracy(2)	
8B37J	J	–100°C to +760°C (–148°F to +1400°F)	0V to +5V	±0.05%	±0.43°C
8B37K	K	–100°C to +1350°C (–148°F to +2462°F)	0V to +5V	±0.05%	±0.73°C
8B37T	T	–100°C to +400°C (–148°F to +752°F)	0V to +5V	±0.05%	±0.25°C
8B37R	R	0°C to +1750°C (+32°F to +3182°F)	0V to +5V	±0.05%	±0.88°C
8B37S	S	0°C to +1750°C (+32°F to +3182°F)	0V to +5V	±0.05%	±0.88°C

‡Thermocouple Alloy Combinations

Standards: DIN IEC 584, ANSI MC96-1-82, JIS C 1602-1981

Type	Material
J	Iron vs. Copper-Nickel
K	Nickel-Chromium vs. Nickel-Aluminum
T	Copper vs. Copper-Nickel
R	Platinum-13% Rhodium vs. Platinum
S	Platinum-10% Rhodium vs. Platinum

Installation Notes:

1.) This Equipment is Suitable for Use in Class I, Division 2, Groups A, B,C, D, or Non-Hazardous Locations Only.

2.) WARNING - Explosion Hazard - Substitution of Any Components May Impair Suitability for Class I, Division 2.

3.) WARNING - Explosion Hazard - Do Not Disconnect Equipment Unless Power Has Been Switched Off or The Area is Known to be Non-Hazardous.

©1995-2017 Dataforth Corporation, All Rights Reserved ISO9001:2008-Registered QMS

8B38

Strain Gage Input Modules, Wide and Narrow Bandwidth

Description

8B modules are an optimal solution for monitoring real-world process signals and providing high-level signals to a data acquisition system. Each 8B38 module isolates, filters, and amplifies a full-bridge strain gage input signal and provides an analog voltage output (Figure 1).

The 8B38 can interface to transducers with a nominal resistance of 100Ω to 2kΩ. Bridge excitation is provided from the module with a stable 10.00V or 3.33V source. Full scale sensitivities of 2mV/V and 3mV/V are offered as standard.

Signal filtering is accomplished with a 5-pole filter optimized for time and frequency response which provides 100dB per decade of normal-mode rejection above the filter cutoff frequency. One pole of this filter is on the field side of the isolation barrier for anti-aliasing, and the other four are on the system side.

A special input circuit on the 8B38 module provides protection against accidental connection of power-line voltages up to 240VAC. Clamp circuits on the I/O and power terminals protect against harmful transients.

Isolation is provided by transformer coupling to suppress transmission of common mode spikes or surges. The module is powered from +5VDC, ±5%.

The modules are designed for installation in Class I, Division 2 hazardous locations and have a high level of immunity to environmental noise.

Features

- Interfaces to 100Ω through 2kΩ Full-Bridge Strain Gages
- High-Level Voltage Outputs
- 1500Vrms Isolation
- ANSI/IEEE C37.90.1 Transient Protection
- Input Protection to 240VAC Continuous
- 100dB CMR
- 3Hz or 8kHz Signal Bandwidth
- ±0.05% Accuracy
- ±0.02% Linearity
- Low Drift with Ambient Temperature
- C-UL-US Listed
- CE Compliant
- ATEX Compliance Pending
- Mix and Match Module Types on Backpanel

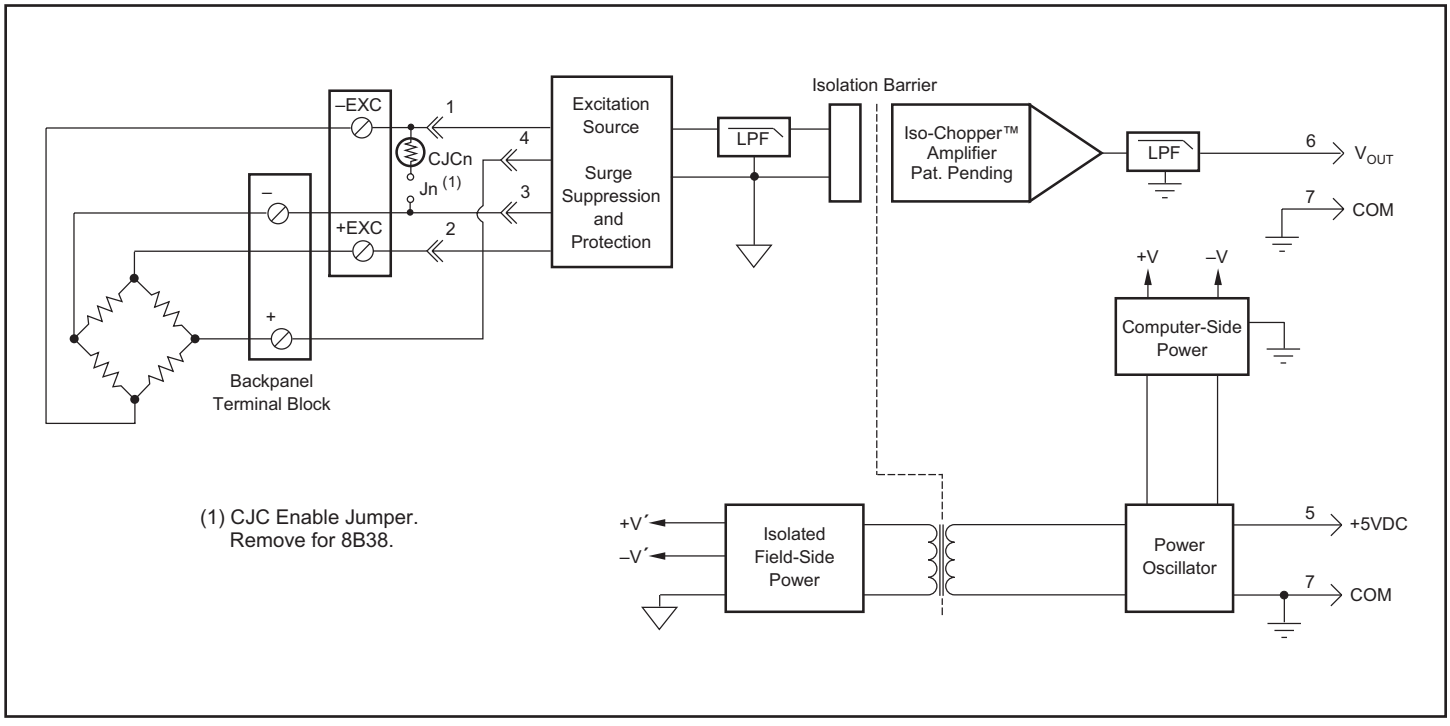

Figure 1: 8B38 Block Diagram

©1995-2017 Dataforth Corporation, All Rights Reserved ISO9001:2008-Registered QMS

Specifications

Typical* at T_A = +25°C and +5VDC power

Module	8B38-0x	8B38-3x
Input Range	±10mV to ±30mV	*
Input Bias Current	±0.5nA	*
Input Resistance		
Normal	50MΩ	*
Power Off	100kΩ	*
Overload	100kΩ	*
Input Protection		
Continuous(1)	240VAC	*
Transient	ANSI/IEEE C37.90.1	*
Excitation Output (-x1)	+3.333V ±2mV	*
Load Resistance	100Ω to 2kΩ	*
Excitation Output (-x2,-x5)	+10V ±5mV	*
Load Resistance	300Ω to 2kΩ	*
Excitation Load Regulation	15ppm/mA	*
Excitation Stability	50ppm/°C	*
Excitation Protection	120VAC	*
CMV, Input to Output	1500Vrms max	*
Transient, Input to Output	ANSI/IEEE C37.90.1	*
CMR (50Hz or 60Hz)	100dB	*
NMR	100dB per Decade above 8kHz	70dB at 60Hz
Accuracy(2)	±0.05% Span	*
Linearity	±0.02% Span	*
Stability		
Offset	±25ppm/°C	*
Gain	±100ppm/°C	±75ppm/°C
Noise		
Output, 100kHz	1500µVrms	200µVrms
Bandwidth, –3dB	8kHz	3Hz
Response Time, 90% Span	70µs	160ms
Output Range	±5V	*
Output Protection	Continuous Short to Ground	*
Transient	ANSI/IEEE C37.90.1	*
Power Supply Voltage	+5VDC ±5%	*
Power Supply Current	110mA No Exc. Load	*
	150mA Full Exc. Load	*
Power Supply Sensitivity	±75ppm/%	*
Mechanical Dimensions (h)(w)(d)	1.11" x 1.65" x 0.40" (28.1mm x 41.9mm x 10.2mm)	*
Environmental		
Operating Temperature Range	–40°C to +85°C	*
Storage Temperature Range	–40°C to +85°C	*
Relative Humidity	0 to 95% Noncondensing	*
Emissions EN61000-6-4	ISM, Group 1	*
Radiated, Conducted	Class A	*
Immunity EN61000-6-2	ISM, Group 1	*
RF	Performance A ±0.5% Span Error	*
ESD, EFT	Performance B	*

NOTES:
*Contact factory or your local Dataforth sales office for maximum values.
* Same specification as 8B38-0x.
(1) 240VAC between +Input terminal and –Input, +EXC, or –EXC terminals.
120VAC between –Input and +EXC or –EXC terminals.
120VAC between +EXC and –EXC terminals.
(2) Includes linearity, hysteresis and repeatability.

Ordering Information

Model	Band-width	Input Range	Exc.	Sens.	Output Range
8B38-01	8kHz	–10mV to +10mV	+3.333V	3mV/V	–5V to +5V
8B38-02	8kHz	–30mV to +30mV	+10.0V	3mV/V	–5V to +5V
8B38-05	8kHz	–20mV to +20mV	+10.0V	2mV/V	–5V to +5V
8B38-06	8kHz	–10mV to +10mV	+3.333V	3mV/V	0V to +5V
8B38-07	8kHz	–30mV to +30mV	+10.0V	3mV/V	0V to +5V
8B38-08	8kHz	–20mV to +20mV	+10.0V	2mV/V	0V to +5V
8B38-31	3Hz	–10mV to +10mV	+3.333V	3mV/V	–5V to +5V
8B38-32	3Hz	–30mV to +30mV	+10.0V	3mV/V	–5V to +5V
8B38-35	3Hz	–20mV to +20mV	+10.0V	2mV/V	–5V to +5V
8B38-36	3Hz	–10mV to +10mV	+3.333V	3mV/V	0V to +5V
8B38-37	3Hz	–30mV to +30mV	+10.0V	3mV/V	0V to +5V
8B38-38	3Hz	–20mV to +20mV	+10.0V	2mV/V	0V to +5V

Installation Notes:

1.) This Equipment is Suitable for Use in Class I, Division 2, Groups A, B,C, D, or Non-Hazardous Locations Only.

2.) WARNING - Explosion Hazard - Substitution of Any Components May Impair Suitability for Class I, Division 2.

3.) WARNING - Explosion Hazard - Do Not Disconnect Equipment Unless Power Has Been Switched Off or The Area is Known to be Non-Hazardous.

©1995-2017 Dataforth Corporation, All Rights Reserved ISO9001:2008-Registered QMS

8B39

Current Output Modules

Description

8B modules are an optimal solution for monitoring real-world process signals and providing high-level signals to a data acquisition system. Each 8B39 module accepts an input signal from a non-isolated source, then isolates, filters, and converts the signal to an analog process current output (Figure 1).

Signal filtering is accomplished with a 3-pole filter optimized for time and frequency response which provides 60dB per decade of normal-mode rejection above 100Hz. One pole of this filter is on the system side and the other two are on the isolated field side.

A special output circuit in the 8B39 module provides protection against accidental connection of power-line voltages up to 40VAC continuous. Clamp circuits on the I/O and power terminals protect against harmful transients.

The modules are designed for installation in Class I, Division 2 hazardous locations and have a high level of immunity to environmental noise.

Features

- Accepts High-Level Voltage or Process Current Input
- Process Current Output
- 1500Vrms Isolation
- ANSI/IEEE C37.90.1 Transient Protection
- Output Protection to 40VAC Continuous
- 110dB CMR
- 100Hz Signal Bandwidth
- ±0.05% Accuracy
- ±0.02% Linearity
- Low Drift with Ambient Temperature
- C-UL-US Listed
- CE Compliant
- ATEX Compliance Pending
- Mix and Match Module Types on Backpanel

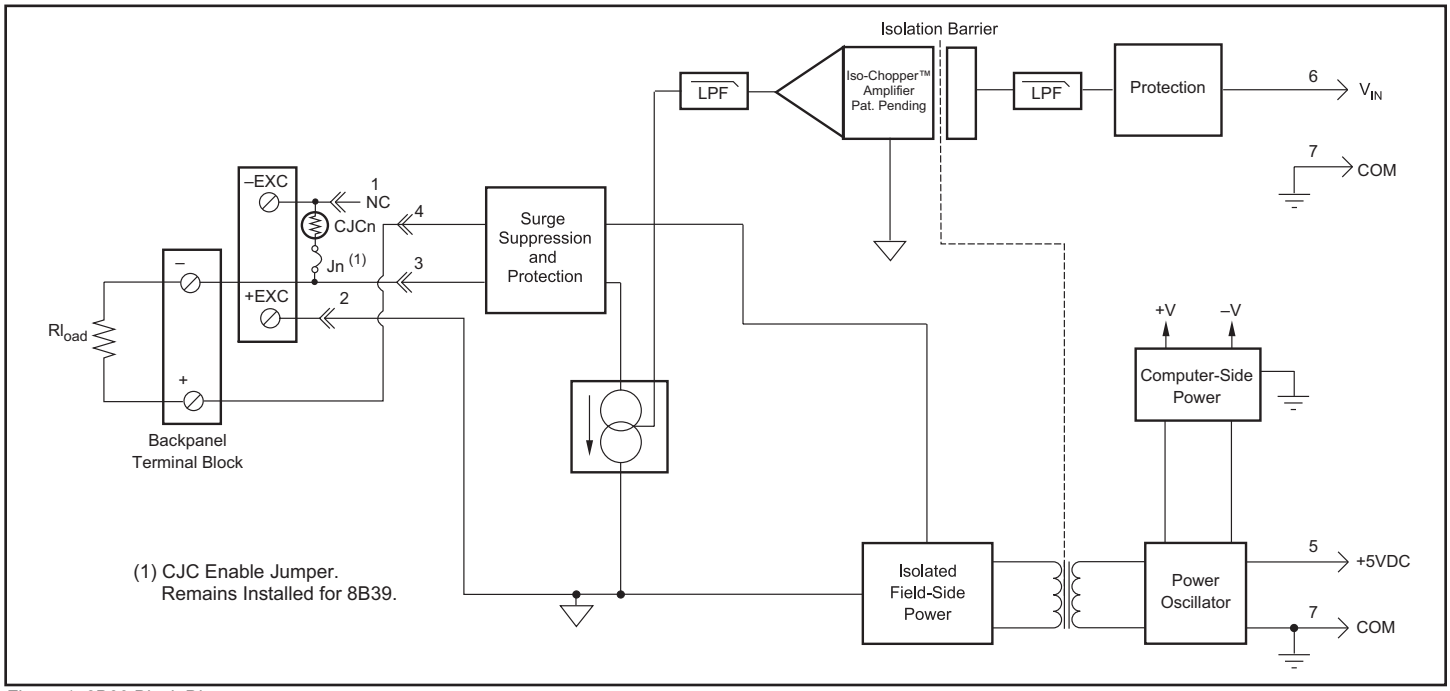

Figure 1: 8B39 Block Diagram

©1995-2017 Dataforth Corporation, All Rights Reserved ISO9001:2008-Registered QMS

Specifications

Typical* at T_A = +25°C and +5VDC power

Module	8B39-01,-02,-03,-04	8B39-07
Input Voltage Range	±5V or 0V to +5V	±5V
Input Voltage Maximum	±20V (no damage)	*
Input Resistance	50MΩ	*
Output Current Range	0 to 20mA or 4 to 20mA	±20mA
Over Range Capability	10%	*
Output Compliance Voltage		
(Open Circuit)	15VDC	±12VDC
Load Resistance Range	0 to 500Ω	0 to 400Ω
Output I Under Fault, max	26mA	±26mA
Output Protection		
Continuous	40VAC	*
Transient	ANSI/IEEE C37.90.1	*
CMV, Output to Input	1500Vrms max	*
Transient, Output to Input	ANSI/IEEE C37.90.1	*
CMR (50Hz or 60Hz)	110dB	*
NMR (–3dB at 100Hz)	60dB per Decade above 100Hz	*
Accuracy(1)	±0.05% Span	*
Linearity	±0.02% Span	*
Stability		
Offset	±10ppm/°C	*
Gain	±50ppm/°C	±100ppm/°C
Noise		
Output, 100kHz	2µArms	*
Bandwidth, –3dB	100Hz	*
Rise Time, 10 to 90% Span	5ms	*
Power Supply Voltage	+5VDC ±5%	*
Power Supply Current	100mA	*
Power Supply Sensitivity	±100ppm/%	*
Mechanical Dimensions	1.11" x 1.65" x 0.40"	*
(h)(w)(d)	(28.1mm x 41.9mm x 10.2mm)	*
Environmental		
Operating Temperature Range	–40°C to +85°C	*
Storage Temperature Range	–40°C to +85°C	*
Relative Humidity	0 to 95% Noncondensing	*
Emissions EN61000-6-4	ISM, Group 1	
Radiated, Conducted	Class A	*
Immunity EN61000-6-2	ISM, Group 1	
RF	Performance A ±0.5% Span Error	*
ESD, EFT	Performance B	*

NOTES:
*Contact factory or your local Dataforth sales office for maximum values.
* Same specification as -01, -02, -03, -04 models.
(1) Includes linearity, hysteresis and repeatability.

Ordering Information

Model	Input Range	Output Range
8B39-01	0V to +5V	4mA to 20mA
8B39-02	–5V to +5V	4mA to 20mA
8B39-03	0V to +5V	0mA to 20mA
8B39-04	–5V to +5V	0mA to 20mA
8B39-07	–5V to +5V	–20mA to +20mA

Installation Notes:

1.) This Equipment is Suitable for Use in Class I, Division 2, Groups A, B,C, D, or Non-Hazardous Locations Only.

2.) WARNING - Explosion Hazard - Substitution of Any Components May Impair Suitability for Class I, Division 2.

3.) WARNING - Explosion Hazard - Do Not Disconnect Equipment Unless Power Has Been Switched Off or The Area is Known to be Non-Hazardous.

©1995-2017 Dataforth Corporation, All Rights Reserved ISO9001:2008-Registered QMS

8B40/41

Voltage Input Modules, 1kHz Bandwidth

Description

8B modules are an optimal solution for monitoring real-world process signals and providing high-level signals to a data acquisition system. Each 8B40 or 8B41 module isolates, filters, and amplifies a voltage input signal and provides an analog voltage output (Figure 1).

Signal filtering is accomplished with a 5-pole filter optimized for time and frequency response which provides 100dB per decade of normal-mode rejection above 1kHz. One pole of this filter is on the field side of the isolation barrier for anti-aliasing, and the other four are on the system side.

A special input circuit on the 8B40 and 8B41 modules provides protection against accidental connection of power-line voltages up to 240VAC. Clamp circuits on the I/O and power terminals protect against harmful transients.

Isolation is provided by transformer coupling to suppress transmission of common mode spikes or surges. The module is powered from +5VDC, ±5%.

The modules are designed for installation in Class I, Division 2 hazardous locations and have a high level of immunity to environmental noise.

Features

- Accepts Millivolt and Voltage Level Signals
- High-Level Voltage Outputs
- 1500Vrms Isolation
- ANSI/IEEE C37.90.1 Transient Protection
- Input Protection to 240VAC Continuous
- 100dB CMR
- 1kHz Signal Bandwidth
- ±0.05% Accuracy
- ±0.02% Linearity
- Low Drift with Ambient Temperature
- C-UL-US Listed
- CE Compliant
- ATEX Compliance Pending
- Mix and Match Module Types on Backpanel

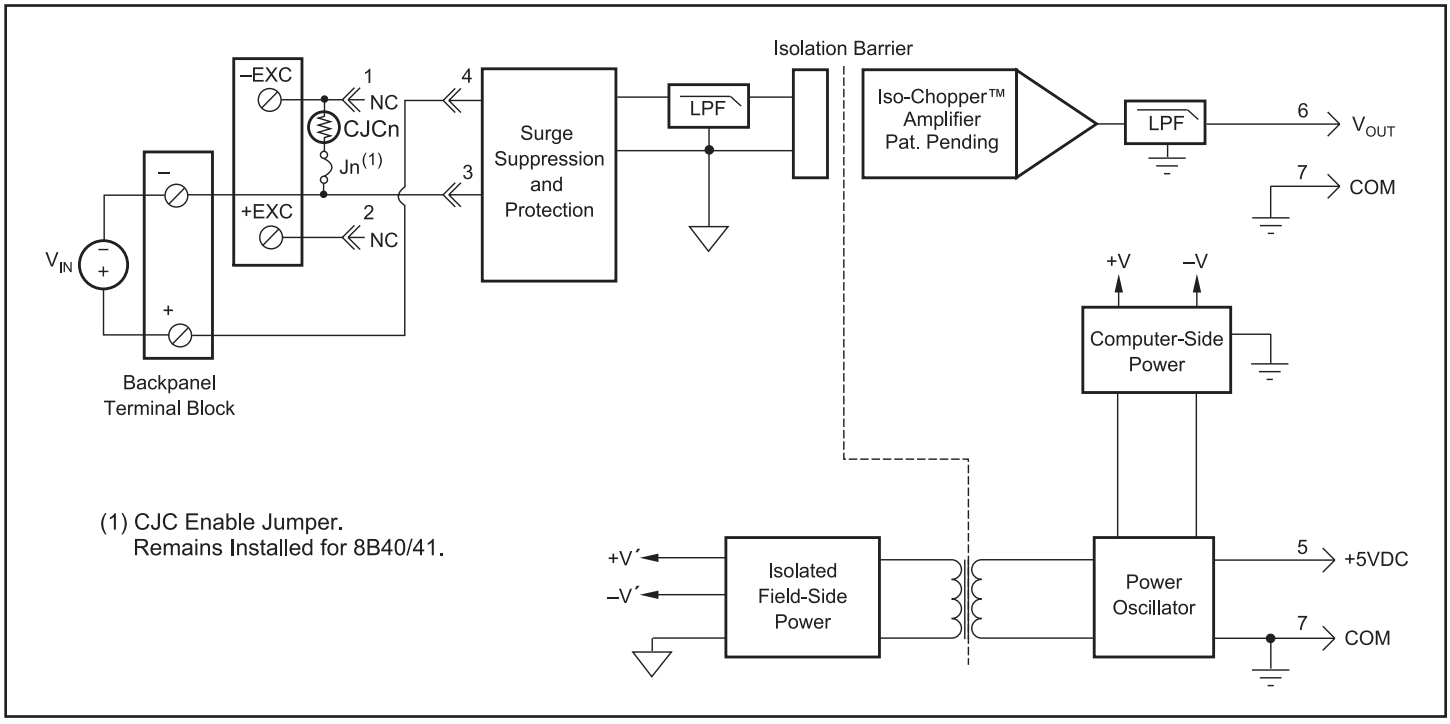

Figure 1: 8B40/41 Block Diagram

©1995-2017 Dataforth Corporation, All Rights Reserved ISO9001:2008-Registered QMS

Specifications

Typical* at T_A = +25°C and +5VDC power

Module	8B40	8B41
Input Range	±10mV to ±100mV	±1V to ±60V
Input Bias Current	±0.5nA	±0.05nA
Input Resistance		
Normal	50MΩ	500kΩ (minimum)
Power Off	100kΩ	500kΩ (minimum)
Overload	100kΩ	500kΩ (minimum)
Input Protection		
Continuous(1)	240VAC	*
Transient	ANSI/IEEE C37.90.1	*
CMV, Input to Output	1500Vrms max	*
Transient, Input to Output	ANSI/IEEE C37.90.1	*
CMR (50Hz or 60Hz)	100dB	*
NMR (-3dB at 1kHz)	100dB per Decade above 1kHz	*
Accuracy(2)	±0.05% Span	*
Linearity	±0.02% Span	*
Stability		
Offset	±10ppm/°C	*
Gain	±50ppm/°C	±75ppm/°C
Noise		
Output, 100kHz	500µVrms	*
Bandwidth, –3dB	1kHz	*
Response Time, 90% Span	550µs	*
Output Range	See Ordering Information	*
Output Protection	Continuous Short to Ground	*
Transient	ANSI/IEEE C37.90.1	*
Power Supply Voltage	+5VDC ±5%	*
Power Supply Current	25mA	*
Power Supply Sensitivity	±75ppm/%	*
Mechanical Dimensions (h)(w)(d)	1.11" x 1.65" x 0.40" (28.1mm x 41.9mm x 10.2mm)	*
Environmental		
Operating Temp. Range	–40°C to +85°C	*
Storage Temp. Range	–40°C to +85°C	*
Relative Humidity	0 to 95% Noncondensing	*
Emissions EN61000-6-4	ISM, Group 1	*
Radiated, Conducted	Class A	*
Immunity EN61000-6-2	ISM, Group 1	*
RF	Performance A ±0.5% Span Error	*
ESD, EFT	Performance B	*

NOTES:
*Contact factory or your local Dataforth sales office for maximum values.
* Same specification as 8B40.
(1) 240VAC between +Input terminal and –Input, +EXC, or –EXC terminals.
120VAC between –Input and +EXC or –EXC terminals.
120VAC between +EXC and –EXC terminals.
(2) Includes linearity, hysteresis and repeatability.

Ordering Information

Model	Input Range	Output Range
8B40-01	–10mV to +10mV	–5V to +5V
8B40-02	–50mV to +50mV	–5V to +5V
8B40-03	–100mV to +100mV	–5V to +5V
8B40-04	–10mV to +10mV	0 to +5V
8B40-05	–50mV to +50mV	0 to +5V
8B40-06	–100mV to +100mV	0 to +5V
8B41-01	–1V to +1V	–5V to +5V
8B41-02	–5V to +5V	–5V to +5V
8B41-03	–10V to +10V	–5V to +5V
8B41-04	–1V to +1V	0V to +5V
8B41-05	–5V to +5V	0V to +5V
8B41-06	–10V to +10V	0V to +5V
8B41-07	–20V to +20V	–5V to +5V
8B41-08	–20V to +20V	0V to +5V
8B41-09	–40V to +40V	–5V to +5V
8B41-10	–40V to +40V	0V to +5V
8B41-12	–60V to +60V	–5V to +5V
8B41-13	–60V to +60V	0V to +5V

Installation Notes:

1.) This Equipment is Suitable for Use in Class I, Division 2, Groups A, B,C, D, or Non-Hazardous Locations Only.

2.) WARNING - Explosion Hazard - Substitution of Any Components May Impair Suitability for Class I, Division 2.

3.) WARNING - Explosion Hazard - Do Not Disconnect Equipment Unless Power Has Been Switched Off or The Area is Known to be Non-Hazardous.

©1995-2017 Dataforth Corporation, All Rights Reserved ISO9001:2008-Registered QMS

8B42

2-Wire Transmitter Interface Modules

Description

8B modules are an optimal solution for monitoring real-world process signals and providing high-level signals to a data acquisition system. Each 8B42 module provides power to a current transmitter, then isolates, filters, and amplifies the resulting process current input signal and provides an analog voltage output (Figure 1).

Current to voltage conversion is accomplished internal to the module to ensure high accuracy.

Signal filtering is accomplished with a 3-pole filter optimized for time and frequency response which provides 60dB per decade of normal-mode rejection above 100Hz.

A special input circuit on the 8B42 module provides protection against accidental connection of power-line voltages up to 40VAC. Clamp circuits on the I/O and power terminals protect against harmful transients.

Isolation is provided by transformer coupling to suppress transmission of common mode spikes or surges. The module is powered from +5VDC, ±5%.

The modules are designed for installation in Class I, Division 2 hazardous locations and have a high level of immunity to environmental noise.

Features

- +12VDC Loop Supply
- Provides Isolation for Non-Isolated 2-Wire Transmitters
- High-Level Voltage Outputs
- 1500Vrms Isolation
- ANSI/IEEE C37.90.1 Transient Protection
- Input Protection to 40VAC Continuous
- 100dB CMR
- 100Hz Bandwidth
- ±0.05% Accuracy
- ±0.02% Linearity
- Low Drift with Ambient Temperature
- C-UL-US Listed
- CE Compliant
- ATEX Compliance Pending
- Mix and Match Module Types on Backpanel

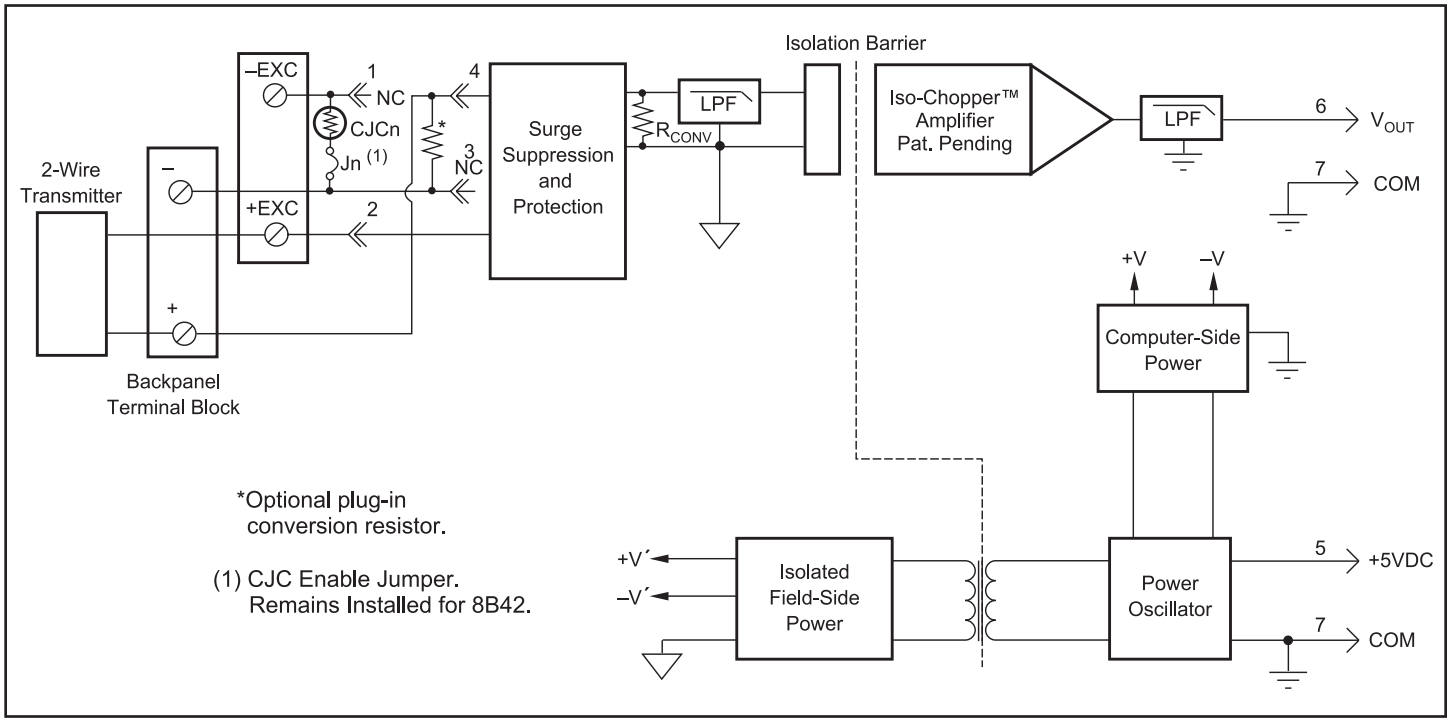

Figure 1: 8B42 Block Diagram

©1995-2017 Dataforth Corporation, All Rights Reserved ISO9001:2008-Registered QMS

Specifications

Typical* at T_A = +25°C and +5VDC power

Module	8B42
Input Range	4mA to 20mA
Input Resistance	
Normal	35Ω
Power Off	35Ω
Input Protection	
Continuous	40VAC
Transient	ANSI/IEEE C37.90.1
Loop Supply Voltage	12VDC
Loop Supply Protection	40VAC
CMV, Input to Output	1500Vrms max
Transient, Input to Output	ANSI/IEEE C37.90.1
CMR (50Hz or 60Hz)	100dB
NMR	60dB per Decade above 100Hz
Accuracy(1)	±0.05% Span
Linearity	±0.02% Span
Stability	
Offset	±25ppm/°C
Gain	±75ppm/°C
Noise	
Output, 100kHz	500µVrms
Bandwidth, –3dB	100Hz
Response Time, 90% Span	5ms
Output Range	0V to +5V
Output Protection	Continuous Short to Ground
Transient	ANSI/IEEE C37.90.1
Power Supply Voltage	+5VDC ±5%
Power Supply Current	140mA
Power Supply Sensitivity	±200ppm/%
Mechanical Dimensions (h)(w)(d)	1.11" x 1.65" x 0.40" (28.1mm x 41.9mm x 10.2mm)
Environmental	
Operating Temperature Range	–40°C to +85°C
Storage Temperature Range	–40°C to +85°C
Relative Humidity	0 to 95% Noncondensing
Emissions EN61000-6-4	ISM, Group 1
Radiated, Conducted	Class A
Immunity EN61000-6-2	ISM, Group 1
RF	Performance A ±0.5% Span Error
ESD, EFT	Performance B

NOTES:
*Contact factory or your local Dataforth sales office for maximum values.
(1) Includes linearity, hysteresis and repeatability.

Ordering Information

Model	Input Range	Output Range
8B42-01	4mA to 20mA	0V to +5V
8B42-02	4mA to 20mA	+1V to +5V

Installation Notes:

1.) This Equipment is Suitable for Use in Class I, Division 2, Groups A, B,C, D, or Non-Hazardous Locations Only.

2.) WARNING - Explosion Hazard - Substitution of Any Components May Impair Suitability for Class I, Division 2.

3.) WARNING - Explosion Hazard - Do Not Disconnect Equipment Unless Power Has Been Switched Off or The Area is Known to be Non-Hazardous.

©1995-2017 Dataforth Corporation, All Rights Reserved ISO9001:2008-Registered QMS

8B43

DC LVDT Input Modules

Description

8B modules are an optimal solution for monitoring real-world process signals and providing high-level signals to a data acquisition system. Each 8B43 module isolates, filters, and amplifies a voltage input signal and provides an analog voltage output (Figure 1).

The 8B43 can interface to transducers that will operate on a 10V excitation voltage and up to 30mA excitation current.

Signal filtering is accomplished with a 5-pole filter optimized for time and frequency response which provides 100dB per decade of normal-mode rejection above 1kHz. One pole of this filter is on the field side of the isolation barrier for anti-aliasing, and the other four are on the system side.

A special input circuit on the 8B43 modules provides protection against accidental connection of power-line voltages up to 240VAC. Clamp circuits on the I/O and power terminals protect against harmful transients.

Isolation is provided by transformer coupling to suppress transmission of common mode spikes or surges. The module is powered from +5VDC, ±5%.

The modules are designed for installation in Class I, Division 2 hazardous locations and have a high level of immunity to environmental noise.

Features

- Interfaces to DC Linear Voltage Displacement Transducers
- High-Level Voltage Outputs
- 1500Vrms Isolation
- ANSI/IEEE C37.90.1 Transient Protection
- Input Protection to 240VAC Continuous
- 100dB CMR
- 1kHz Signal Bandwidth
- ±0.05% Accuracy
- ±0.02% Linearity
- Low Drift with Ambient Temperature
- C-UL-US Listed
- CE Compliant
- ATEX Compliance Pending
- Mix and Match Module Types on Backpanel

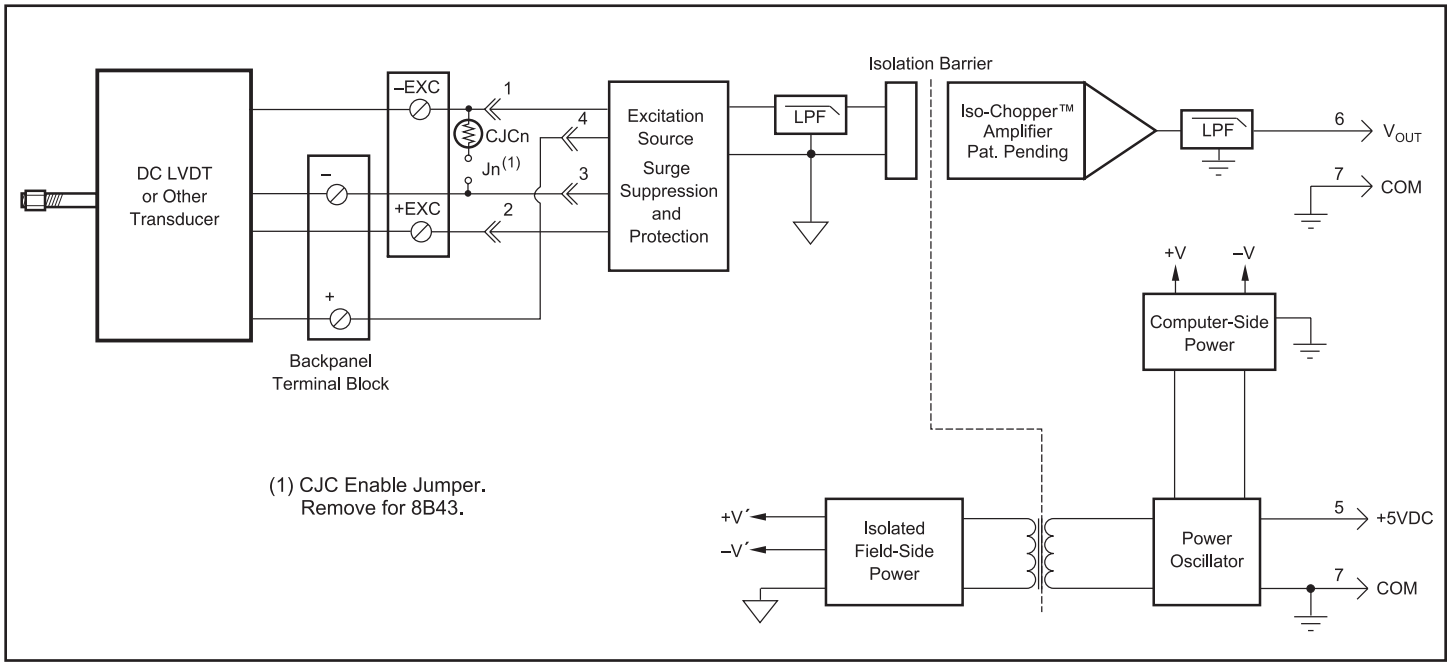

Figure 1: 8B43 Block Diagram

©1995-2017 Dataforth Corporation, All Rights Reserved ISO9001:2008-Registered QMS

Specifications

Typical* at T_A = +25°C and +5VDC power

Module	8B43
Input Range	±1V to ±5V
Input Bias Current	±0.05nA
Input Resistance	
Normal	2MΩ (minimum)
Power Off	2MΩ (minimum)
Overload	2MΩ (minimum)
Input Protection	
Continuous(1)	240VAC
Transient	ANSI/IEEE C37.90.1
Excitation	
Voltage	+10V ±5mV
Current	5mA min, 30mA max
Load Regulation	15ppm/mA
Stability	50ppm/°C
Protection	120VAC
CMV, Input to Output	1500Vrms max
Transient, Input to Output	ANSI/IEEE C37.90.1
CMR (50Hz or 60Hz)	100dB
NMR (-3dB at 1kHz)	100dB per Decade above 1kHz
Accuracy(2)	±0.05% Span
Linearity	±0.02% Span
Stability	
Offset	±25ppm/°C
Gain	±100ppm/°C
Noise	
Output, 100kHz	500µVrms
Bandwidth, –3dB	1kHz
Response Time, 90% Span	550µs
Output Range	See Ordering Information
Output Protection	Continuous Short to Ground
Transient	ANSI/IEEE C37.90.1
Power Supply Voltage	+5VDC ±5%
Power Supply Current	160mA Full Exc. Load
Power Supply Sensitivity	±100ppm/%
Mechanical Dimensions	1.11" x 1.65" x 0.40"
(h)(w)(d)	(28.1mm x 41.9mm x 10.2mm)
Environmental	
Operating Temp. Range	–40°C to +85°C
Storage Temp. Range	–40°C to +85°C
Relative Humidity	0 to 95% Noncondensing
Emissions EN61000-6-4	ISM, Group 1
Radiated, Conducted	Class A
Immunity EN61000-6-2	ISM, Group 1
RF	Performance A ±0.5% Span Error
ESD,EFT	Performance B

NOTES:
*Contact factory or your local Dataforth sales office for maximum values.
(1) 240VAC between +Input terminal and –Input, +EXC, or –EXC terminals.
120VAC between –Input and +EXC or –EXC terminals.
120VAC between +EXC and –EXC terminals.
(2) Includes linearity, hysteresis and repeatability.

Ordering Information

Model	Input Range	Output Range
8B43-01	–1V to +1V	–5V to +5V
8B43-02	–2V to +2V	–5V to +5V
8B43-03	–3V to +3V	–5V to +5V
8B43-04	–4V to +4V	–5V to +5V
8B43-05	–5V to +5V	–5V to +5V
8B43-11	–1V to +1V	0V to +5V
8B43-12	–2V to +2V	0V to +5V
8B43-13	–3V to +3V	0V to +5V
8B43-14	–4V to +4V	0V to +5V
8B43-15	–5V to +5V	0V to +5V

Installation Notes:

1.) This Equipment is Suitable for Use in Class I, Division 2, Groups A, B,C, D, or Non-Hazardous Locations Only.

2.) WARNING - Explosion Hazard - Substitution of Any Components May Impair Suitability for Class I, Division 2.

3.) WARNING - Explosion Hazard - Do Not Disconnect Equipment Unless Power Has Been Switched Off or The Area is Known to be Non-Hazardous.

©1995-2017 Dataforth Corporation, All Rights Reserved ISO9001:2008-Registered QMS

8B45

Frequency Input Modules

Description

8B modules are an optimal solution for monitoring real-world process signals and providing high-level signals to a data acquisition system. Each 8B45 module isolates and conditions a frequency input signal and provides an analog voltage output (Figure 1).

The frequency input signal can be either a TTL level or zero crossing with as little as ±100mV amplitude. Input circuitry for each signal type has built-in hysteresis to prevent spurious noise from corrupting the module output. TTL signals are applied to the + and – terminals while zero crossing signals are applied to the +EXC and – terminals. Reference the block diagram below.

A 5V excitation is available for use with magnetic pick-up or contact closure type sensors. The excitation is available on the –EXC terminal with return on the – terminal.

A special input circuit on the 8B45 module provides protection against accidental connection of power-line voltages up to 240VAC. Clamp circuits on the I/O and power terminals protect against harmful transients.

Isolation is provided by optical coupling to suppress transmission of common mode spikes or surges. The module is powered from +5VDC, ±5%.

The modules are designed for installation in Class I, Division 2 hazardous locations and have a high level of immunity to environmental noise.

Features

- Accepts Frequency Input Signals 0 to 100kHz
- TTL or Zero-Crossing Signal Inputs
- High-Level Voltage Outputs
- 1500Vrms Isolation
- ANSI/IEEE C37.90.1 Transient Protection
- Input Protection to 240VAC Continuous
- 100dB CMR
- ±0.05% Accuracy
- ±0.02% Linearity
- Low Drift with Ambient Temperature
- C-UL-US Listed
- CE Compliant
- ATEX Compliance Pending
- Mix and Match Module Types on Backpanel

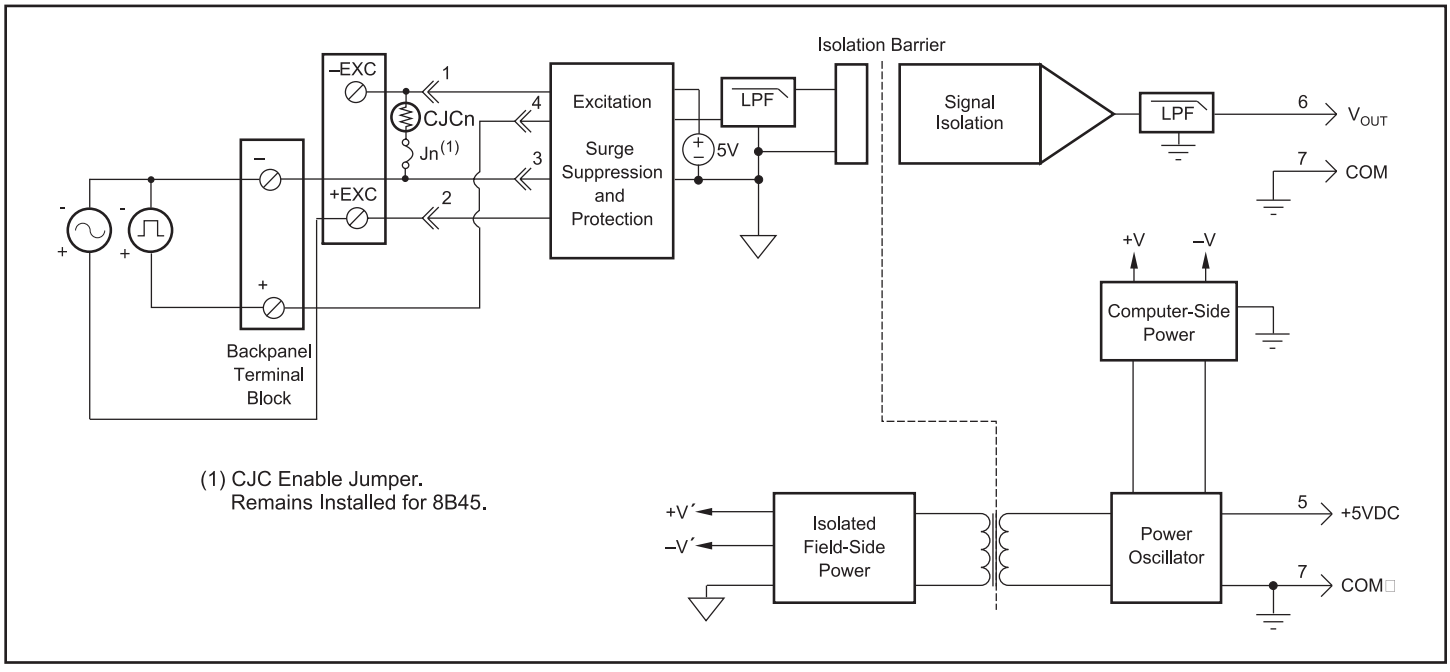

Figure 1: 8B45 Block Diagram

©1995-2017 Dataforth Corporation, All Rights Reserved ISO9001:2008-Registered QMS

Specifications

Typical* at T_A = +25°C and +5VDC power

Module	8B45
Input Range	0Hz to 100kHz
Input Threshold	Zero Crossing
Minimum Input	100mVp-p
Maximum Input	350Vp-p TTL, 170Vp-p Zero Crossing
Minimum Pulse Width	4µs
TTL Input Low	0.8V max
TTL Input High	2.4V min
Input Hysteresis	
Zero Crossing	±50mV
TTL	1.5V
Input Resistance	
Normal	68kΩ
Power Off	68kΩ
Overload	68kΩ
Input Protection	
Continuous(1)	240Vrms max
Transient	ANSI/IEEE C37.90.1
Excitation	+5V at 8mA max
CMV, Input to Output	
Continuous	1500Vrms max
Transient	ANSI/IEEE C37.90.1
CMR (50 or 60Hz)	100dB
Accuracy(2)	±0.05% Span
Linearity	±0.02% Span
Stability	
Offset	±25ppm/°C
Gain	±100ppm/°C
Noise	
Output Ripple	<10mVp-p at Input >2% span
Response Time (0 to 90%)	
8B45-01, -02, -03	160ms, 80ms, 35ms
8B45-04, -05, -06	16ms, 8.5ms, 3.4ms
8B45-07, -08	1.6ms, 0.8ms
Output Range	0 to +5V
Output Protection	Continuous Short to Ground
Transient	ANSI/IEEE C37.90.1
Power Supply Voltage	+5VDC ±5%
Power Supply Current	45mA
Power Supply Sensitivity	±75ppm/%
Mechanical Dimensions (h)(w)(d)	1.11" x 1.65" x 0.40" (28.1mm x 41.9mm x 10.2mm)
Environmental	
Operating Temp. Range	–40°C to +85°C
Storage Temp. Range	–40°C to +85°C
Relative Humidity	0 to 95% Noncondensing
Emissions EN61000-6-4	ISM, Group 1
Radiated, Conducted	Class A
Immunity EN61000-6-2	ISM, Group 1
RF	Performance A ±0.5% Span Error
ESD,EFT	Performance B

NOTES:
*Contact factory or your local Dataforth sales office for maximum values.
(1) 240VAC between +Input terminal and –Input, +EXC, or –EXC terminals.
120VAC between –Input and +EXC or –EXC terminals.
120VAC between +EXC and –EXC terminals.
(2) Includes linearity, hysteresis and repeatability.

Ordering Information

Model	Input Range	Output Range
8B45-01	0Hz to 500Hz	0V to +5V
8B45-02	0Hz to 1kHz	0V to +5V
8B45-03	0Hz to 2.5kHz	0V to +5V
8B45-04	0Hz to 5kHz	0V to +5V
8B45-05	0Hz to 10kHz	0V to +5V
8B45-06	0Hz to 25kHz	0V to +5V
8B45-07	0Hz to 50kHz	0V to +5V
8B45-08	0Hz to 100kHz	0V to +5V

Installation Notes:

1.) This Equipment is Suitable for Use in Class I, Division 2, Groups A, B,C, D, or Non-Hazardous Locations Only.

2.) WARNING - Explosion Hazard - Substitution of Any Components May Impair Suitability for Class I, Division 2.

3.) WARNING - Explosion Hazard - Do Not Disconnect Equipment Unless Power Has Been Switched Off or The Area is Known to be Non-Hazardous.

©1995-2017 Dataforth Corporation, All Rights Reserved ISO9001:2008-Registered QMS

8B47

Linearized Thermocouple Input Modules

Description

8B modules are an optimal solution for monitoring real-world process signals and providing high-level signals to a data acquisition system. Each 8B47 module isolates, filters, amplifies, and linearizes a single channel of temperature input from a thermocouple and provides an analog voltage output (Figure 1).

Linearization is accomplished using a four breakpoint piecewise linear approximation.

The 8B47 can interface to industry standard thermocouple types J, K, and T and has an output signal of 0 to +5V. Each module is cold-junction compensated to correct for parasitic thermocouples formed by the thermocouple wire and screw terminals on the mounting backpanel. Upscale open thermocouple detect is provided by an internal pull-up resistor.

Signal filtering is accomplished with a 3-pole filter optimized for time and frequency response which provides 70dB of normal-mode rejection at 60Hz. One pole of this filter is on the field side of the isolation barrier for anti-aliasing, and the other two are on the system side.

A special input circuit on the 8B47 module provides protection against accidental connection of power-line voltages up to 240VAC. Clamp circuits on the I/O and power terminals protect against harmful transients.

The modules are designed for installation in Class I, Division 2 hazardous locations and have a high level of immunity to environmental noise.

Features

- Interfaces to Types J, K, and T Thermocouples
- Linearizes Thermocouple Signal
- High-Level Voltage Outputs
- 1500Vrms Isolation
- ANSI/IEEE C37.90.1 Transient Protection
- Input Protection to 240VAC Continuous
- 120dB CMR
- 70dB NMR at 60Hz
- Low Drift with Ambient Temperature
- Accurate CJC –40°C to +85°C
- C-UL-US Listed
- CE Compliant
- ATEX Compliance Pending
- Mix and Match Module Types on Backpanel

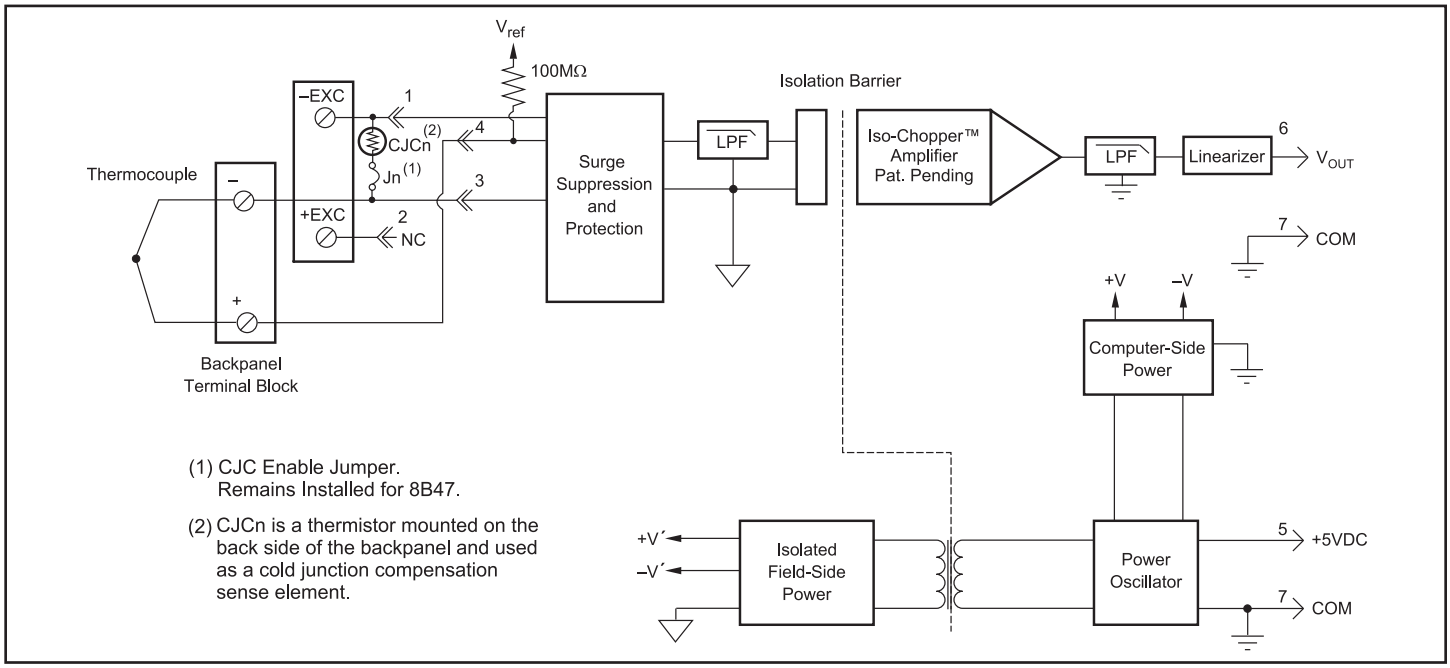

Figure 1: 8B47 Block Diagram

©1995-2017 Dataforth Corporation, All Rights Reserved ISO9001:2008-Registered QMS

Specifications

Typical* at T_A = +25°C and +5VDC power

Module	8B47
Input Range	–0.1V to +0.5V
Input Bias Current	–25nA
Input Resistance	
Normal	50MΩ
Power Off	200kΩ
Overload	200kΩ
Input Protection	
Continuous(1)	240VAC
Transient	ANSI/IEEE C37.90.1
CMV, Input to Output	1500Vrms max
Transient, Input to Output	ANSI/IEEE C37.90.1
CMR (50Hz or 60Hz)	120dB
NMR	70dB at 60Hz
Accuracy	See Ordering Information
Stability	
Offset	±20ppm/°C
Gain	±75ppm/°C
Noise	
Output, 100kHz	250µVrms
Bandwidth, –3dB	3Hz
Response Time, 90% Span	150ms
Output Range	0V to +5V
Output Protection	Continuous Short to Ground
Transient	ANSI/IEEE C37.90.1
Cold Junction Compensation	
Accuracy, 25°C	±0.5°C
Accuracy, –40°C to +85°C	±1.5°C
Open Input Response	Upscale
Open Input Detection Time	<10s
Power Supply Voltage	+5VDC ±5%
Power Supply Current	30mA
Power Supply Sensitivity	±100ppm/%
Mechanical Dimensions (h)(w)(d)	1.11" x 1.65" x 0.40" (28.1mm x 41.9mm x 10.2mm)
Environmental	
Operating Temperature Range	–40°C to +85°C
Storage Temperature Range	–40°C to +85°C
Relative Humidity	0 to 95% Noncondensing
Emissions EN61000-6-4	ISM, Group 1
Radiated, Conducted	Class A
Immunity EN61000-6-2	ISM, Group 1
RF	Performance A ±0.5% Span Error
ESD, EFT	Performance B

NOTES:
*Contact factory or your local Dataforth sales office for maximum values.
(1) 240VAC between +Input terminal and –Input, +EXC, or –EXC terminals.
120VAC between –Input and +EXC or –EXC terminals.
120VAC between +EXC and –EXC terminals.
(2) Includes conformity, hysteresis and repeatability. Does not include CJC accuracy.

Ordering Information

Model	TC Type‡	Input Range	Output Range	Accuracy(2)	
8B47J-01	J	0°C to +760°C (+32°F to +1400°F)	0V to +5V	±0.10%	±0.76°C
8B47J-02	J	–100°C to +300°C (–148°F to +572°F)	0V to +5V	±0.20%	±0.80°C
8B47J-03	J	0°C to +500°C (+32°F to +932°F)	0V to +5V	±0.20%	±1.00°C
8B47J-12	J	–100°C to +760°C (–148°F to +1400°F)	0V to +5V	±0.20%	±1.72°C
8B47K-04	K	0°C to +1000°C (+32°F to +1832°F)	0V to +5V	±0.15%	±1.50°C
8B47K-05	K	0°C to +500°C (+32°F to +932°F)	0V to +5V	±0.15%	±0.75°C
8B47K-13	K	–100°C to +1350°C (–148°F to +2462°F)	0V to +5V	±0.15%	±2.18°C
8B47K-14	K	0°C to +1200°C (+32°F to +2192°F)	0V to +5V	±0.15%	±1.80°C
8B47T-06	T	–100°C to +400°C (–148°F to +752°F)	0V to +5V	±0.20%	±1.00°C
8B47T-07	T	0°C to +200°C (+32°F to +392°F)	0V to +5V	±0.20%	±0.40°C

‡Thermocouple Alloy Combinations

Standards: DIN IEC 584, ANSI MC96-1-82, JIS C 1602-1981

Type	Material
J	Iron vs. Copper-Nickel
K	Nickel-Chromium vs. Nickel-Aluminum
T	Copper vs. Copper-Nickel

Installation Notes:

1.) This Equipment is Suitable for Use in Class I, Division 2, Groups A, B,C, D, or Non-Hazardous Locations Only.

2.) WARNING - Explosion Hazard - Substitution of Any Components May Impair Suitability for Class I, Division 2.

3.) WARNING - Explosion Hazard - Do Not Disconnect Equipment Unless Power Has Been Switched Off or The Area is Known to be Non-Hazardous.

©1995-2017 Dataforth Corporation, All Rights Reserved ISO9001:2008-Registered QMS

8B49

Voltage Output Modules

Description

8B modules are an optimal solution for monitoring real-world process signals and providing high-level signals to a data acquisition system. Each 8B49 module accepts an input signal from a non-isolated source, then isolates, filters and converts the signal to a high-level process voltage output (Figure 1).

Signal filtering is accomplished with a 4-pole filter optimized for time and frequency response which provides 80dB per decade of normal-mode rejection above 100Hz. One pole of this filter is on the system side and the other three are on the isolated field side.

A special output circuit in the 8B49 module provides protection against accidental connection of power-line voltages up to 40VAC continuous. Clamp circuits on the I/O and power terminals protect against harmful transients.

The modules are designed for installation in Class I, Division 2 hazardous locations and have a high level of immunity to environmental noise.

Features

- Accepts High-Level Voltage
- Isolated Process Voltage Output
- 1500Vrms Isolation
- ANSI/IEEE C37.90.1 Transient Protection
- Output Protection to 40VAC Continuous
- 110dB CMR
- 100Hz Signal Bandwidth
- ±0.05% Accuracy
- ±0.02% Linearity
- Low Drift with Ambient Temperature
- C-UL-US Listed
- CE Compliant
- ATEX Compliance Pending
- Mix and Match Module Types on Backpanel

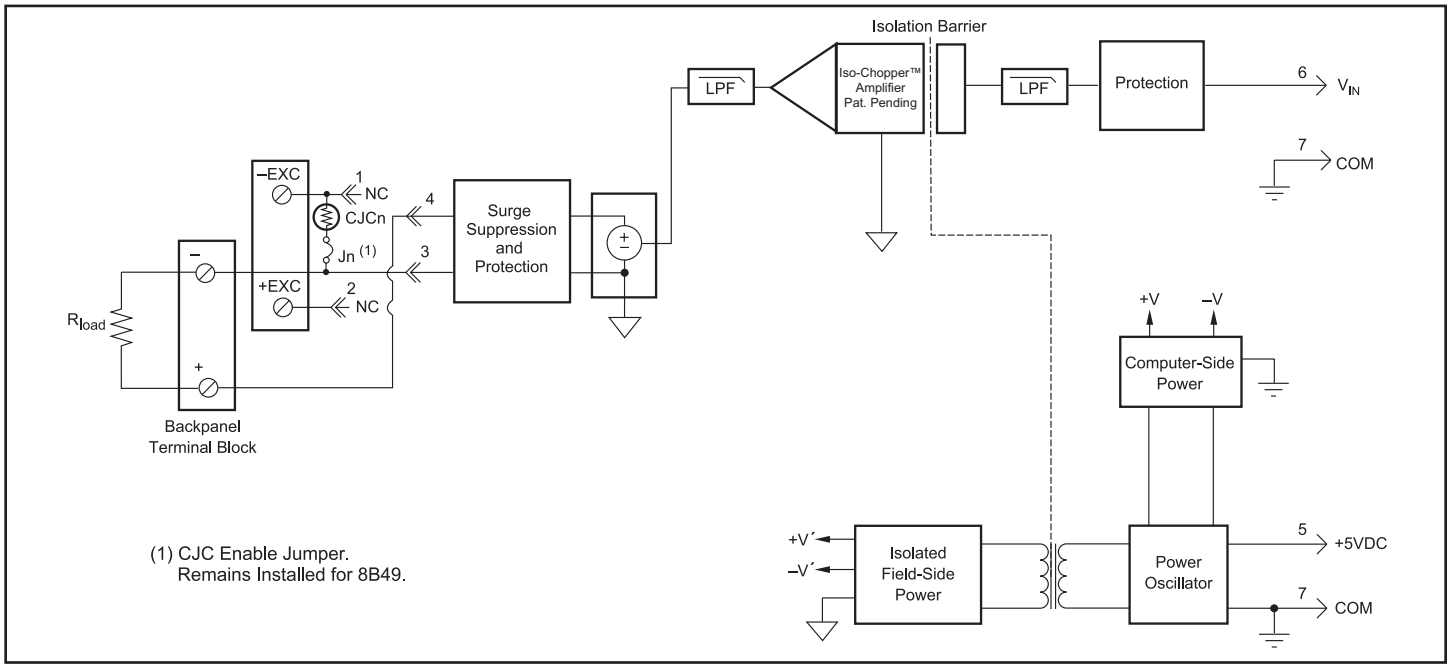

Figure 1: 8B49 Block Diagram

©1995-2017 Dataforth Corporation, All Rights Reserved ISO9001:2008-Registered QMS

Specifications

Typical* at T_A = +25°C and +5VDC power

Module	8B49
Input Voltage Range	±5V, 0 to +5V, ±10V, 0 to +10V
Input Voltage Maximum	±20V (no damage)
Input Resistance	≥1MΩ
Output Voltage Range	±5V, 0 to +5V, ±10V, 0 to +10V
Over Range Capability	5% at 10V output
Output Drive	±20mA max
Output I Under Fault, max	30mA
Output Protection	
Continuous	40VAC max
Transient	ANSI/IEEE C37.90.1
CMV, Output to Input	
Continuous	1500Vrms max
Transient	ANSI/IEEE C37.90.1
CMR (50 or 60Hz)	110dB
NMR (–3dB at 100Hz)	80dB per Decade above 100Hz
Accuracy(1)	±0.05% Span (0 to 10mA Load) ±0.075% Span (10 to 20mA Load)
Linearity	±0.02% Span
Stability	
Offset	±10ppm/°C
Gain	±50ppm/°C
Noise	
Output, 100kHz	800µVrms
Bandwidth, –3dB	100Hz
Response Time, 90% Span	5ms
Power Supply Voltage	+5VDC ±5%
Power Supply Current	100mA Full Load, 30mA No Load
Power Supply Sensitivity	±100ppm/%
Mechanical Dimensions (h)(w)(d)	1.11" x 1.65" x 0.40" (28.1mm x 41.9mm x 10.2mm)
Environmental	
Operating Temperature Range	–40°C to +85°C
Storage Temperature Range	–40°C to +85°C
Relative Humidity	0 to 95% Noncondensing
Emissions EN61000-6-4	ISM, Group 1
Radiated, Conducted	Class A
Immunity EN61000-6-2	ISM, Group 1
RF	Performance A ±0.5% Span Error
ESD,EFT	Performance B

NOTES:
*Contact factory or your local Dataforth sales office for maximum values.
(1) Includes linearity, hysteresis and repeatability.

Ordering Information

Model	Input Range	Output Range
8B49-01	0V to +5V	–5V to +5V
8B49-02	-5V to +5V	–5V to +5V
8B49-03	–5V to +5V	0V to +5V
8B49-04	0V to +10V	–10V to +10V
8B49-05	–10V to +10V	–10V to +10V
8B49-06	–10V to +10V	0V to +10V
8B49-07	–5V to +5V	–10V to +10V

Installation Notes:

1.) This Equipment is Suitable for Use in Class I, Division 2, Groups A, B,C, D, or Non-Hazardous Locations Only.

2.) WARNING - Explosion Hazard - Substitution of Any Components May Impair Suitability for Class I, Division 2.

3.) WARNING - Explosion Hazard - Do Not Disconnect Equipment Unless Power Has Been Switched Off or The Area is Known to be Non-Hazardous.

©1995-2017 Dataforth Corporation, All Rights Reserved ISO9001:2008-Registered QMS

8B50/51

Voltage Input Modules, 20kHz Bandwidth

Description

8B modules are an optimal solution for monitoring real-world process signals and providing high-level signals to a data acquisition system. Each 8B50 or 8B51 module isolates, filters, and amplifies a voltage input signal and provides an analog voltage output (Figure 1).

Signal filtering is accomplished with a 5-pole filter optimized for time and frequency response which provides 100dB per decade of normal-mode rejection above 20kHz. One pole of this filter is on the field side of the isolation barrier for anti-aliasing, and the other four are on the system side.

A special input circuit on the 8B50 and 8B51 modules provides protection against accidental connection of power-line voltages up to 240VAC. Clamp circuits on the I/O and power terminals protect against harmful transients.

Isolation is provided by transformer coupling to suppress transmission of common mode spikes or surges. The module is powered from +5VDC, ±5%.

The modules are designed for installation in Class I, Division 2 hazardous locations and have a high level of immunity to environmental noise.

Features

- Accepts Millivolt and Voltage Level Signals
- High-Level Voltage Outputs
- 1500Vrms Isolation
- ANSI/IEEE C37.90.1 Transient Protection
- Input Protection to 240VAC Continuous
- 100dB CMR
- 20kHz Signal Bandwidth
- ±0.05% Accuracy
- ±0.02% Linearity
- Low Drift with Ambient Temperature
- C-UL-US Listed
- CE Compliant
- ATEX Compliance Pending
- Mix and Match Module Types on Backpanel

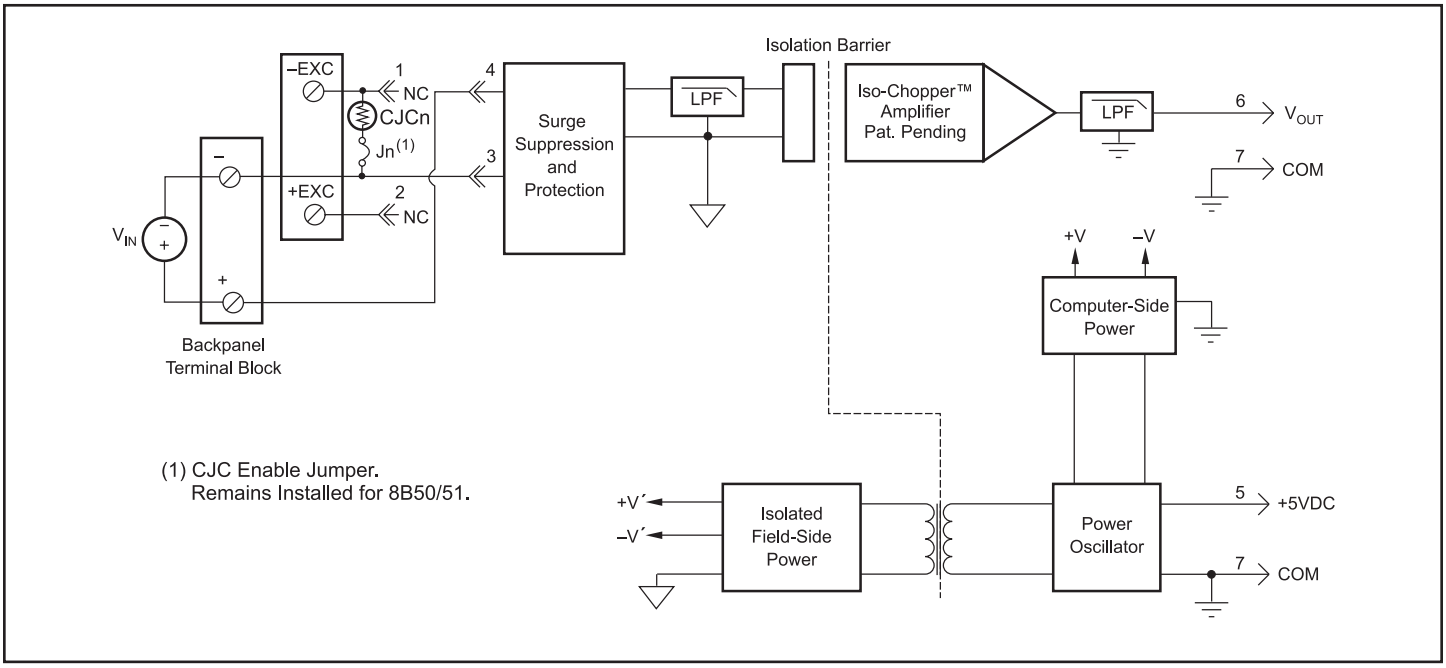

Figure 1: 8B50/51 Block Diagram

©1995-2017 Dataforth Corporation, All Rights Reserved ISO9001:2008-Registered QMS

Specifications

Typical* at T_A = +25°C and +5VDC power

Module	8B50	8B51
Input Range	±20mV to ±100mV	±1V to ±60V
Input Bias Current	±0.5nA	±0.05nA
Input Resistance		
Normal	50MΩ	500kΩ (minimum)
Power Off	100kΩ	500kΩ (minimum)
Overload	100kΩ	500kΩ (minimum)
Input Protection		
Continuous(1)	240VAC	*
Transient	ANSI/IEEE C37.90.1	*
CMV, Input to Output	1500Vrms max	*
Transient, Input to Output	ANSI/IEEE C37.90.1	*
CMR (50Hz or 60Hz)	100dB	*
NMR (–3dB at 20kHz)	100dB per Decade above 20kHz	*
Accuracy(2)	±0.05% Span	*
Linearity	±0.02% Span	*
Stability		
Offset	±10ppm/°C	*
Gain	±50ppm/°C	±75ppm/°C
Noise		
Output, 100kHz	500µVrms	*
Bandwidth, –3dB	20kHz (15kHz, 50-01)	*
Rise Time, 10 to 90% Span	25µs	*
Output Range	See Ordering Information	*
Output Protection	Continuous Short to Ground	*
Transient	ANSI/IEEE C37.90.1	*
Power Supply Voltage	+5VDC ±5%	*
Power Supply Current	25mA	*
Power Supply Sensitivity	±75ppm/%	*
Mechanical Dimensions (h)(w)(d)	1.11" x 1.65" x 0.40" (28.1mm x 41.9mm x 10.2mm)	*
Environmental		
Operating Temp. Range	–40°C to +85°C	*
Storage Temp. Range	–40°C to +85°C	*
Relative Humidity	0 to 95% Noncondensing	*
Emissions EN61000-6-4	ISM, Group 1	*
Radiated, Conducted	Class A	*
Immunity EN61000-6-2	ISM, Group 1	*
RF	Performance A ±0.5% Span Error	*
ESD, EFT	Performance B	*

NOTES:
*Contact factory or your local Dataforth sales office for maximum values.
* Same specification as 8B50.
(1) 240VAC between +Input terminal and –Input, +EXC, or –EXC terminals.
120VAC between –Input and +EXC or –EXC terminals.
120VAC between +EXC and –EXC terminals.
(2) Includes linearity, hysteresis and repeatability.

Ordering Information

Model	Input Range	Output Range
8B50-01	–20mV to +20mV	–5V to +5V
8B50-02	–50mV to +50mV	–5V to +5V
8B50-03	–100mV to +100mV	–5V to +5V
8B50-04	–20mV to +20mV	0 to +5V
8B50-05	–50mV to +50mV	0 to +5V
8B50-06	–100mV to +100mV	0 to +5V
8B51-01	–1V to +1V	–5V to +5V
8B51-02	–5V to +5V	–5V to +5V
8B51-03	–10V to +10V	–5V to +5V
8B51-04	–1V to +1V	0V to +5V
8B51-05	–5V to +5V	0V to +5V
8B51-06	–10V to +10V	0V to +5V
8B51-07	–20V to +20V	–5V to +5V
8B51-08	–20V to +20V	0V to +5V
8B51-09	–40V to +40V	–5V to +5V
8B51-10	–40V to +40V	0V to +5V
8B51-12	–60V to +60V	–5V to +5V
8B51-13	–60V to +60V	0V to +5V

Installation Notes:

1.) This Equipment is Suitable for Use in Class I, Division 2, Groups A, B,C, D, or Non-Hazardous Locations Only.

2.) WARNING - Explosion Hazard - Substitution of Any Components May Impair Suitability for Class I, Division 2.

3.) WARNING - Explosion Hazard - Do Not Disconnect Equipment Unless Power Has Been Switched Off or The Area is Known to be Non-Hazardous.

©1995-2017 Dataforth Corporation, All Rights Reserved ISO9001:2008-Registered QMS

8B

Module Dimensions and Pinouts

Description

The following mechanical drawing is useful when designing circuit boards to mount the 8B modules. Many sockets are available which accept the mounting pins. As an example, Mill-Max provides a socket with part number 0660. The captive nut for the 4-40 mounting screw can be obtained from PEM (Penn Engineering and Manufacturing), part number KFS2-440.

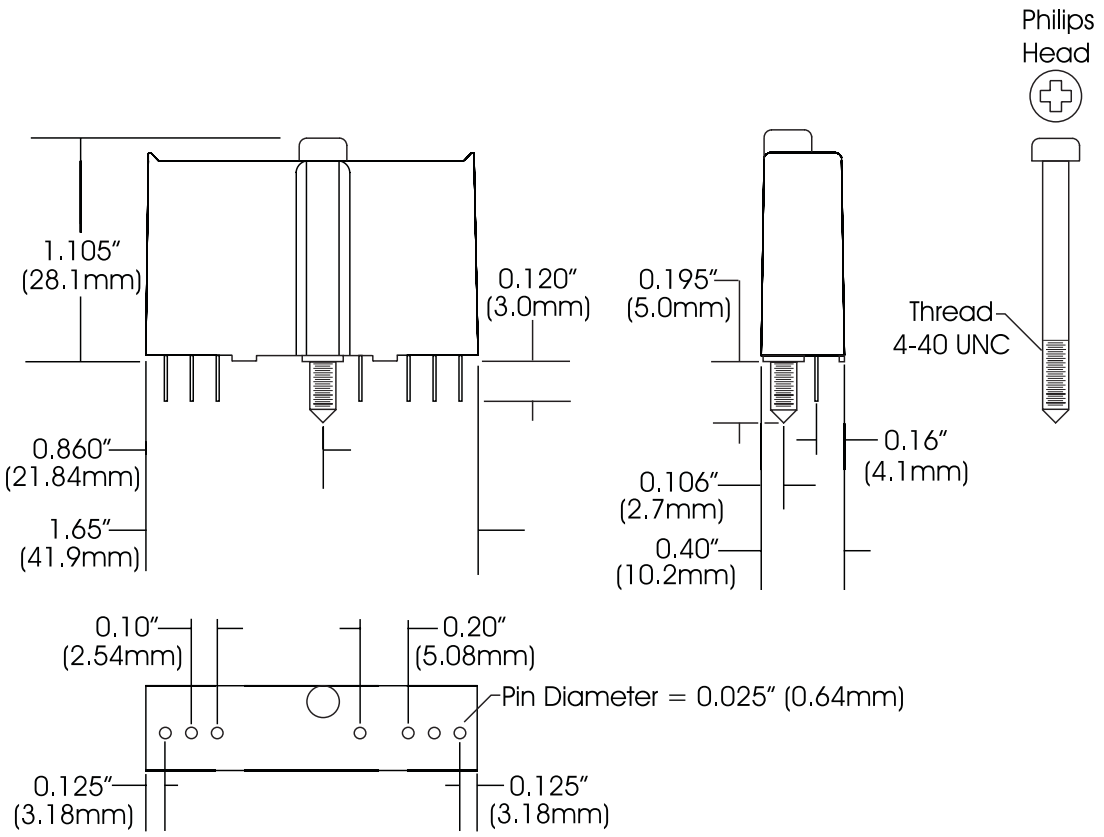

NOTE:
All dimensions are "Typical" unless otherwise noted.

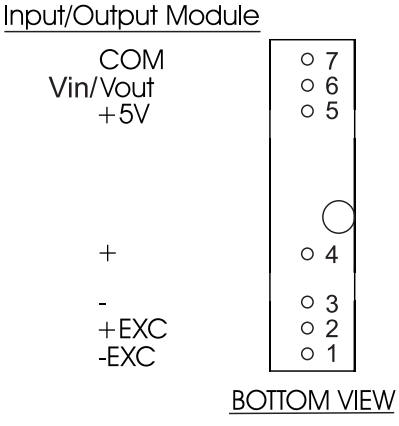

©1995-2017 Dataforth Corporation, All Rights Reserved ISO9001:2008-Registered QMS

Accessories for 8B Analog Modules

Features

- Single Channel DIN Rail Mounting Accessory
- 2-, 4-, 8-, 16-Position Backpanels
- Panel or DIN Rail Mounting Options
- 19-Inch Mounting Rack for Backpanels
- Interface Cables
- Cable-to-Screw-Terminal Interface Board
- Power Supplies

8BP01

Single Channel DIN Rail Mount Carrier

Description

The 8BP01 provides simple mounting and I/O connections for any of the 8B signal conditioners. 8BP01-205 and 8BP01-305 models accept 5V power and provide it to the module. 8BP01-224 and 8BP01-324 models accept wide range 7-34VDC power and provide 5V power to the module through an on-board power converter. The 8B carrier can be mounted on any standard DIN rail (EN 50022-35 and EN 50035-G32). The 8BP01 measures only 2.32" x 3.54" x 0.65" (59mm x 90mm x 16.5mm), making it ideal for use in high-density installations (see Figure 1). It has a flammability rating of UL94 V-0.

Specifications

Typical* at T_A = +25°C and +5VDC power Typical* at T_A = +25°C and +24VDC power

Module	8BP01-205, -305	8BP01-224, -324
Input Voltage Range	4.85 to 5.2VDC	7 to 34VDC
Over-Voltage Protection	6V TVS, 1A Fuse, OV detection	36V TVS, 1A Fuse, OV detection
Over-Voltage Shutdown Voltage	5.6V max	35.5V max
Under-Voltage Turn-on	–	6.5V min
Reverse Voltage Protection	1A Fuse	1A Fuse
Output Voltage Regulation	–	5VDC ±1%
Power Indicator	Green LED	Green LED
Output Voltage Temp. Coeff.	±200ppm/°C	±200ppm/°C
Output Current	250mA max (–40°C to +85°C)	250mA max (–40°C to +85°C)
Output Current Limit	–	0.8A, Auto Recovery
Line Regulation	–	±0.25%
Load Regulation	–	±0.5%
Efficiency	–	75%
Output Ripple	–	<50mVpk-pk
Mechanical Dimensions (h)(w)(d)	2.32" x 3.54" x 0.65" (59mm x 90mm x 16.5mm)	2.32" x 3.54" x 0.65" (59mm x 90mm x 16.5mm)

NOTES: *Contact factory or your local Dataforth sales office for maximum values.

Ordering Information

Part Number	Description
8BP01-205	5V Power, No CJC
8BP01-305	5V Power, CJC
8BP01-224	24V Power, No CJC
8BP01-324	24V Power, CJC

Installation Notes:

1.) This Equipment is Suitable for Use in Class I, Division 2, Groups A, B,C, D, or Non-Hazardous Locations Only.

2.) WARNING - Explosion Hazard - Substitution of Any Components May Impair Suitability for Class I, Division 2.

3.) WARNING - Explosion Hazard - Do Not Disconnect Equipment Unless Power Has Been Switched Off or The Area is Known to be Non-Hazardous.

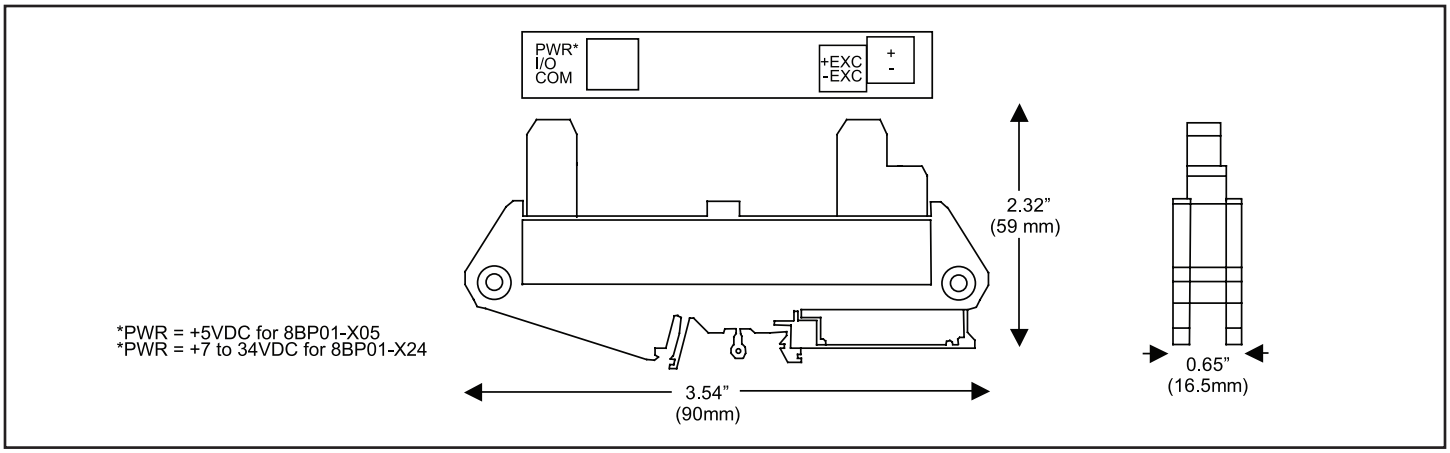

Figure 1: 8BP01 Single Channel DIN Rail Mount Carrier

©1995-2017 Dataforth Corporation, All Rights Reserved ISO9001:2008-Registered QMS

8BP02, 8BP04, 8BP08, 8BP16

2-, 4-, 8-, and 16-Position Analog I/O Backpanels

Description

The 8BP02, 04, 08, and 16 backpanels can accept any of the 8B analog I/O modules in any mixture and can be mounted on the SCMXRK-002 19-inch metal rack. Analog I/O signal channels provide each module with its own analog bus. All module outputs are simultaneously accessible to high-speed data acquisition (ADC) boards. A temperature sensor is mounted on each channel to provide cold junction compensation for thermocouple input modules (see Figure 6 for schematic). Field connections are terminated with four screw terminals at each module site. Use system interface cable SCMXCA006-XX for connection to the host system.

Specifications

Operating Temperature	–40°C to +85°C
Relative Humidity	95% Noncondensing
Interface Connector:	
Field	high density screw clamp, 16 AWG max
System	high density screw clamp, 16 AWG max
Isolation:	
Input-to-Output	1500Vrms continuous, max
Channel-to-Channel	1500Vrms continuous, max

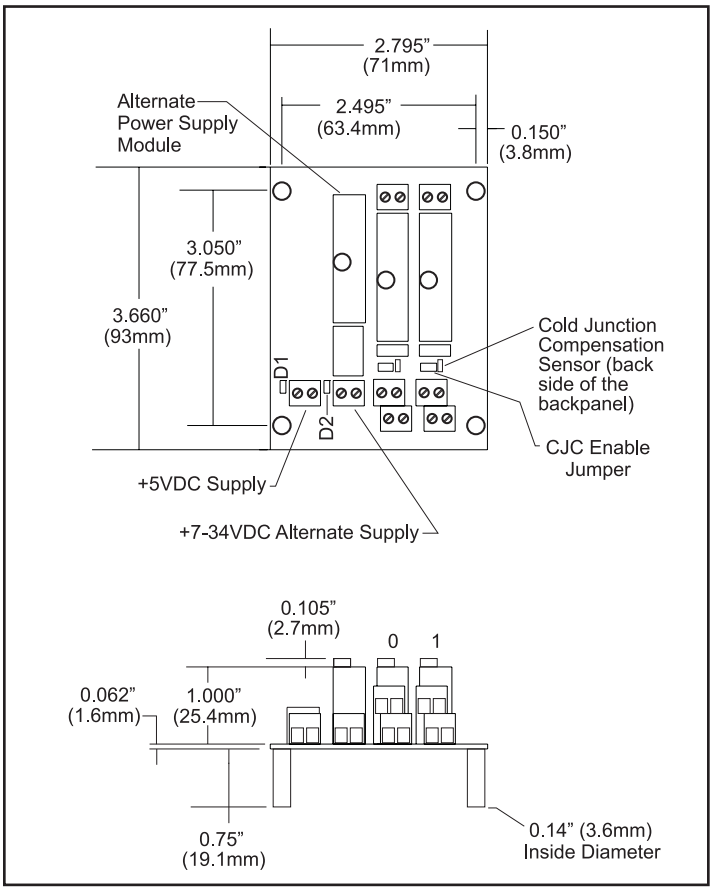

Figure 2: 8BP02 Analog I/O Backpanel

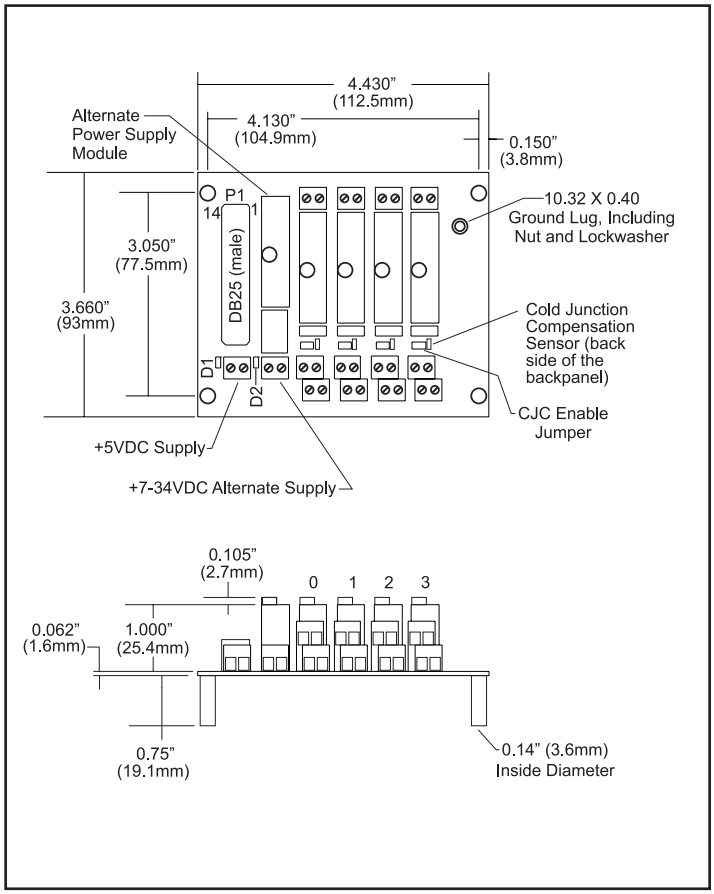

Figure 3: 8BP04 Analog I/O Backpanel

©1995-2017 Dataforth Corporation, All Rights Reserved ISO9001:2008-Registered QMS

Electrical

Power

The 8B backpanels have two power supply options. A +5VDC ±5% supply can be connected to the '+5V Supply' terminal block, or alternatively, a wide ranging 7-34VDC supply can be connected to the 'Alternate Supply' terminal block. In the latter case, the 8BPWR-2 module must be installed on the backpanel. The backpanel contains circuitry which automatically switches between the supplies such that only one at a time provides power to the modules. When power connections are made to both terminal blocks simultaneously, the 7-34VDC supply takes precedence over the +5VDC supply.

Fusing

Backpanel power is fuse-protected through F1 and F2. Zener diodes D3 and D4 provide extra protection from overvoltage and supply reversal.

Grounding

For full protection against large electrical disturbances on the field-side of the 8B modules, a #10-32 ground stud is provided on the backpanel. An electrical connection between this ground stud and the system ground should be provided with a large gage wire of the shortest possible length.

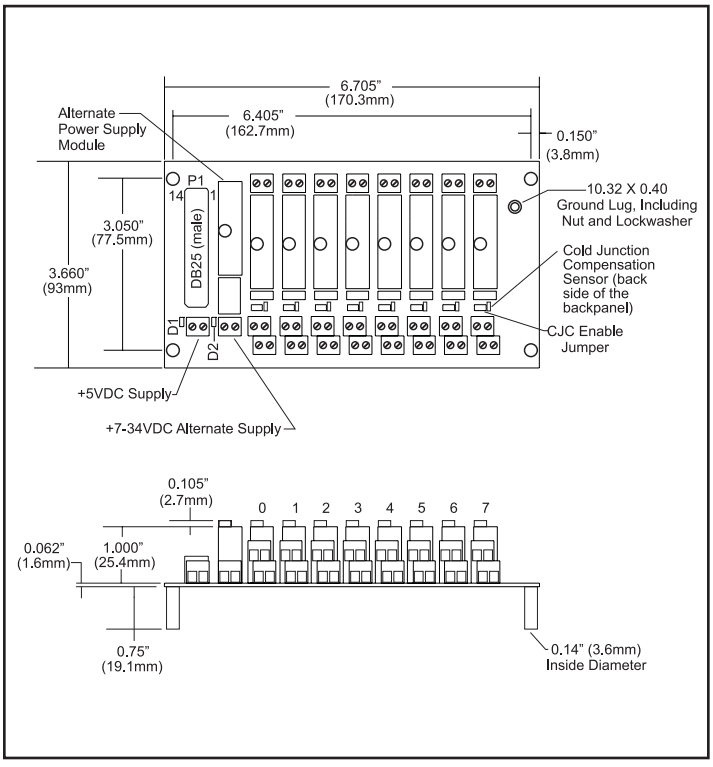

Figure 4: 8BP08 Analog I/O Backpanel

Ordering Information

Part Number	Description
8BP02	Standard 2-channel backpanel with standoffs for mounting.
8BP02-1	8BP02 without cold junction compensation sensor. Use when cost savings are desired and thermocouple input modules 8B37 and 8B47 will not be used.
8BP02-2	8BP02 with DIN rail mounting option. The backpanel is captured by DIN rail mounting elements and is shipped fully assembled.
8BP02-3	8BP02-1 with DIN rail mounting option.
8BP04	Standard 4-channel backpanel with standoffs for mounting.
8BP04-1	8BP04 without cold junction compensation sensor. Use when cost savings are desired and thermocouple input modules 8B37 and 8B47 will not be used.
8BP04-2	8BP04 with DIN rail mounting option. The backpanel is captured by DIN rail mounting elements and is shipped fully assembled.
8BP04-3	8BP04-1 with DIN rail mounting option.
8BP08	Standard 8-channel backpanel with standoffs for mounting.
8BP08-1	8BP08 without cold junction compensation sensor. Use when cost savings are desired and thermocouple input modules 8B37 and 8B47 will not be used.
8BP08-2	8BP08 with DIN rail mounting option. The backpanel is captured by DIN rail mounting elements and is shipped fully assembled.
8BP08-3	8BP08-1 with DIN rail mounting option.
8BP16	Standard 16-channel backpanel with standoffs for mounting.
8BP16-1	8BP16 without cold junction compensation sensor. Use when cost savings are desired and thermocouple input modules 8B37 and 8B47 will not be used.
8BP16-2	8BP16 with DIN rail mounting option. The backpanel is captured by DIN rail mounting elements and is shipped fully assembled.
8BP16-3	8BP16-1 with DIN rail mounting option.

Installation Notes:

1.) This Equipment is Suitable for Use in Class I, Division 2, Groups A, B,C, D, or Non-Hazardous Locations Only.

2.) WARNING - Explosion Hazard - Substitution of Any Components May Impair Suitability for Class I, Division 2.

3.) WARNING - Explosion Hazard - Do Not Disconnect Equipment Unless Power Has Been Switched Off or The Area is Known to be Non-Hazardous.

©1995-2017 Dataforth Corporation, All Rights Reserved ISO9001:2008-Registered QMS

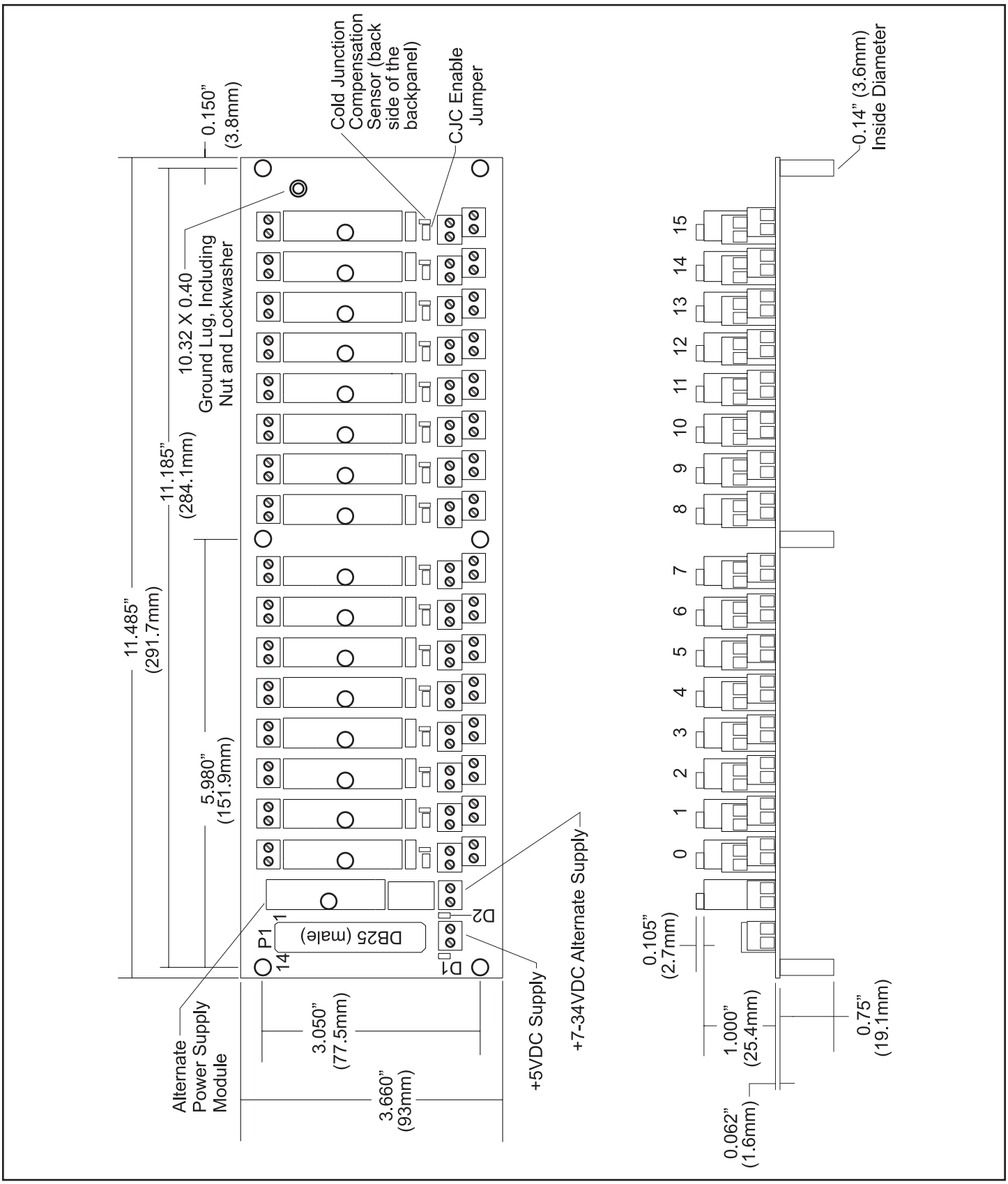

Figure 5: 8BP16 Analog I/O Backpanel

©1995-2017 Dataforth Corporation, All Rights Reserved ISO9001:2008-Registered QMS

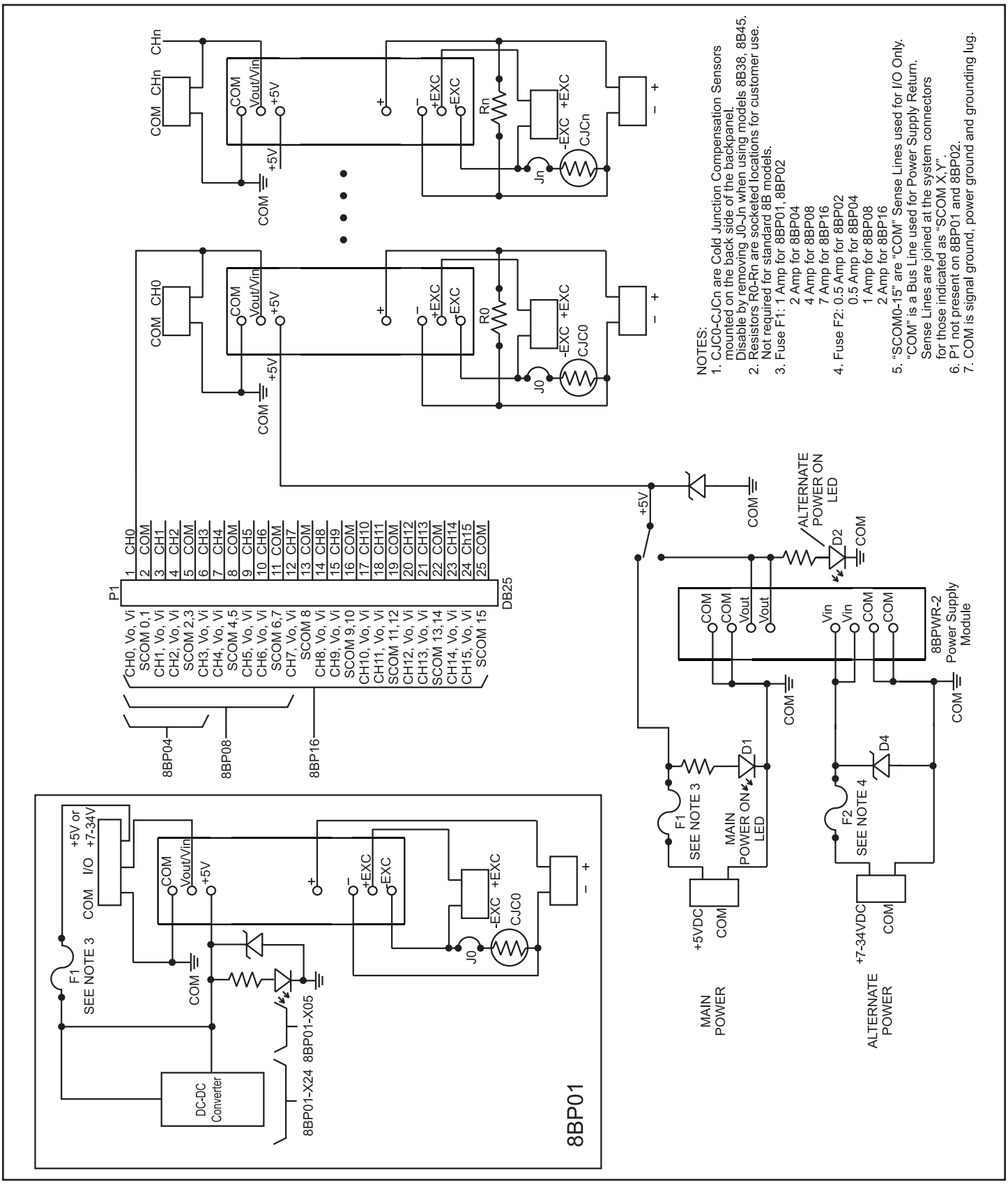

Figure 6: 8BP01/8BP02/8BP04/8BP08/8BP16 Schematic

©1995-2017 Dataforth Corporation, All Rights Reserved ISO9001:2008-Registered QMS

8BPWR-2

Power Supply Module

Description

The 8BPWR-2 encapsulated power supply has a wide ranging 7-34VDC input voltage range and provides 5VDC output suitable for all 8B modules. It is designed to mount on the 8B backpanels. The compact size and low weight are ideal for high-density applications (see Figure 7).

Specifications Typical* at T_A = +25°C and +24VDC power

Module	8BPWR-2
Input Voltage Range	7 to 34VDC
Overvoltage Protection	None (provided on backpanel)
Reverse Voltage Protection	None (provided on backpanel)
Output Voltage	5VDC ±1%
Output Voltage Temp. Coeff.	±200ppm/°C
Output Current	3A (–40°C to +65°C) 2A (85°C)
Output Current Limit	4A, Auto Recovery
Line Regulation	±0.20%
Load Regulation	±0.30%
Efficiency	85%
Output Ripple	50mVp-p
Mechanical Dimensions (h)(w)(d)	1.11" x 1.65" x 0.40" (28.1mm x 41.9mm x 10.2mm)

NOTES: *Contact factory or your local Dataforth sales office for maximum values.

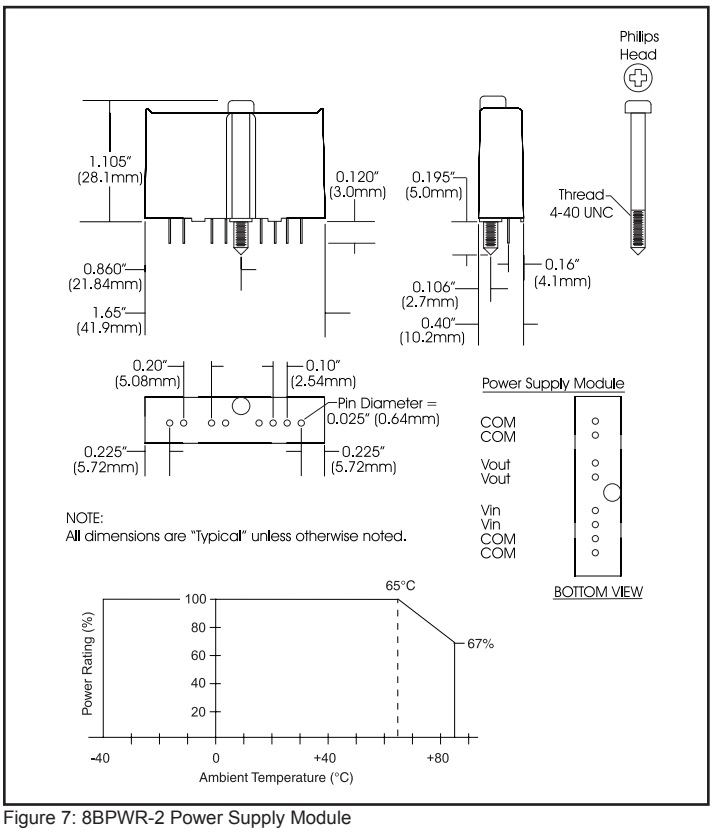

Figure 7: 8BPWR-2 Power Supply Module

SCMXPRT-001/D, SCMXPRE-001/D

Power Supplies

Description

The SCMXPRT-001/D and SCMXPRE-001/D encapsulated power supplies are available in 120VAC or 220VAC input voltage ranges and provide 5VDC outputs suitable for all 8B modules. They are designed to mount on the SCMXRK-002 metal rack (see Figure 13) or DIN rail EN 50022-35x7.5 (D versions). The supplies are UL-recognized. Their compact size and low weight are ideal for high-density applications (see Figure 8).

Specifications Typical* at T_A = +25°C

Module	8BPWR-2	8BPWR-2
Input Voltage Range, 47Hz to 420Hz	105 to 125VAC	210 to 250VAC
Output Voltage	5VDC	5VDC
Output Current, +50°C	1A	1A
Operating Temperature	–20°C to +71°C	–20°C to +71°C
Line Regulation	±0.05%	±0.05%
Load Regulation	±0.25%	±0.25%
Output Ripple, max	1mVrms	1mVrms
Weight	1.25 lbs (567g)	1.25 lbs (567g)

NOTES:
*Contact factory or your local Dataforth sales office for maximum values.
Supplies are UL recognized, File No. E45344.

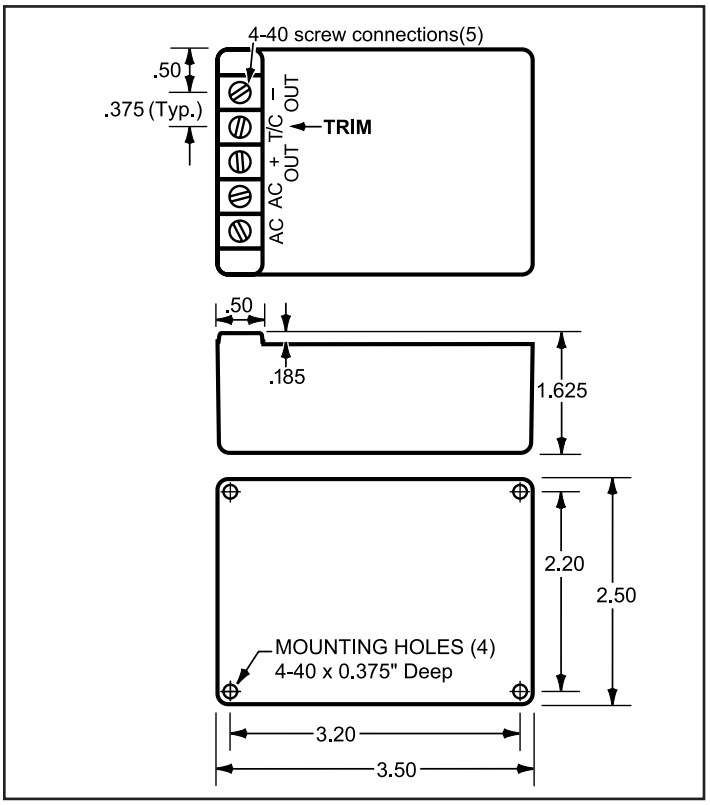

Figure 8: SCMXPRT-001/D and SCMXPRE-001/D Physical Dimensions

©1995-2017 Dataforth Corporation, All Rights Reserved ISO9001:2008-Registered QMS

SCMXPRT-003, SCMXPRE-003

Power Supplies

Description

The SCMXPRT/E-003 linear power supplies are available in 120VAC or 220VAC input. They have sufficient output current capacity to supply any combination of 8B modules. The SCMXRK-002 metal rack provides mounting capability for the SCMXPRT/E-003 power supplies (see Figure 13).

Specifications Typical* at T_A = +25°C

Module	SCMXPRT-003	SCMXPRE-003
Input Voltage Range, 47Hz to 63Hz	104 to 132VAC	207 to 265VAC
Output Voltage	5VDC ±1%	5VDC ±1%
Output Current (at +70°C)	3A	3A
Output Current (at +50°C)	6A	6A
Operating Temp	0 to +70°C	0 to +70°C
Dielectric Withstand Voltage (input to ground)	3750VAC	3750VAC
Line Regulation (10% line change)	±0.05%	±0.05%
Load Regulation (50% load change)	±0.05%	±0.05%
Output Ripple (max)	5mVp-p	5mVp-p
Overvoltage Protection (factory set)	6.2V ±0.4V	6.2V ±0.4V

NOTES:
*Contact factory or your local Dataforth sales office for maximum values.
Both supplies are tested and certified by TUV to VDE 0806 and IEC 380. They are UL recognized (File Number E55974), CSA Certified (CSA File Number LR38879), and CE Compliant.

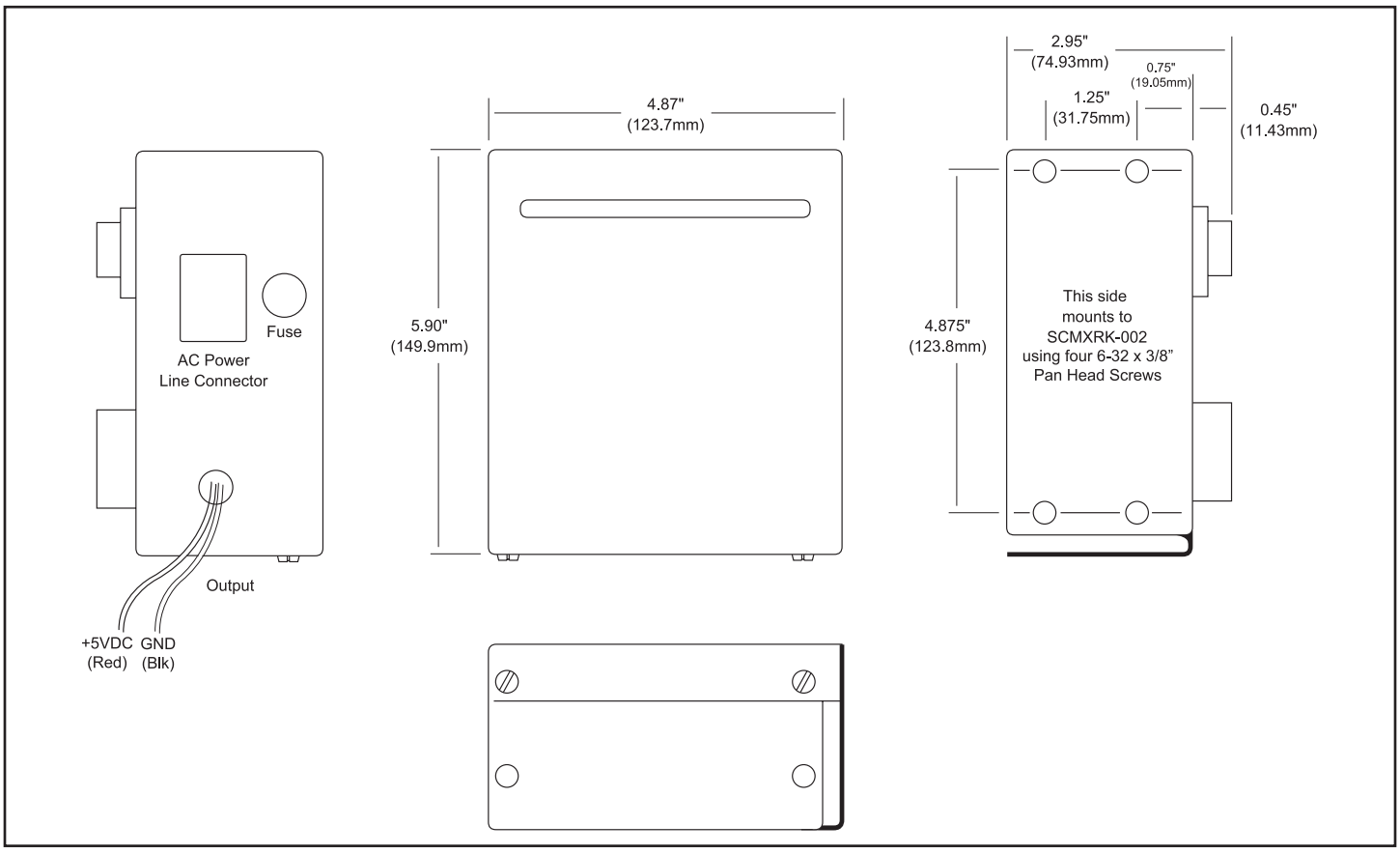

Figure 9: SCMXPRT-003/E-003 Physical Dimensions

©1995-2017 Dataforth Corporation, All Rights Reserved ISO9001:2008-Registered QMS

PWR-4505

25W Single Output Industrial DIN Rail Switching Power Supply

Specifications Typical* at T_A = +25°C

Input Frequency Input Current Inrush Current Efficiency	85 to 264VAC, 120 to 370VDC 47 to 63Hz 1.5A/115VAC, 0.75A/230VAC Cold start 30A/115VAC, 60A/230VAC 72%
Output Voltage & Current Rating Temperature Coefficient Ripple Voltage	5V, 5A ±0.03%/°C 100mVp-p
Overload Protection Over Voltage Protection Over Temperature Protection	105 to 150% rated output power 5.75 to 6.75V 135°C detect on heatsink of power transistor
Dielectric Strength	Between input and output terminals: 3kV, 1 minute Between input and FG: 1.5kV, 1 minute Between output and FG: 0.5kV, 1 minute
Insulation Resistance	Between input and output terminals/input and FG/ output and FG: 100MΩ/500VDC
Operating Temperature Storage Temperature Relative Humidity	–10°C to +50°C –20°C to +85°C 10 to 95%
Mechanical Dimensions (l)(w)(h)	3.66" x 3.07" x 2.24" (93mm x 78mm x 57mm)
Terminal Screw	M3

NOTES:
*Contact factory or your local Dataforth sales office for maximum values.

Features

- Universal AC Input (85 to 264VAC)
- DC Compatible Input (120 to 370VDC)
- Protections: Short Circuit, Overload, Over Voltage, Over Temperature
- Mounts on DIN Rail TS-35/7.5 & 15
- Approvals: UL, CUL, TUV, CB, CE
- CE Compliant, UL 508 Listed
- TUV EN60950-1 Approved
- Compliant with EMC Directive EN50082-2
- LED Indicator for Power On

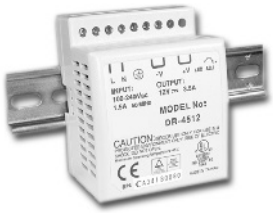

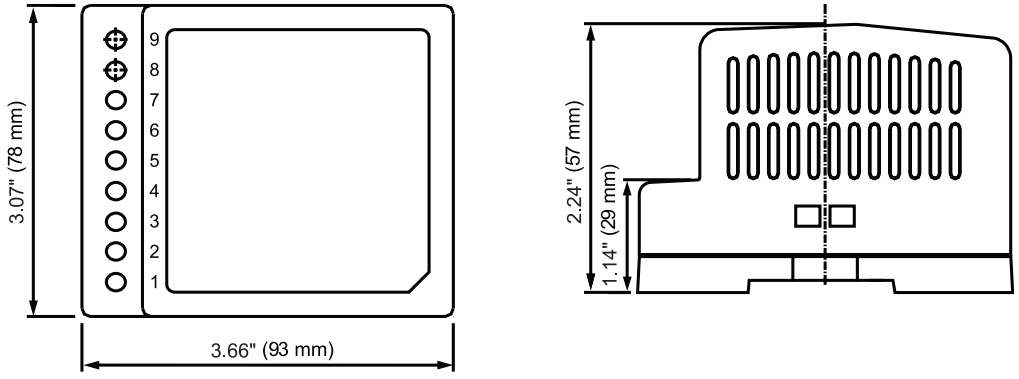

Terminal Pin No. Assignment

Pin No.	Assignment	Pin No.	Assignment
1	AC/L	6,7	DC OUTPUT+V
2	AC/N	8	LED
3	FG ⏚	9	+V ADJ.
4,5	DC OUTPUT-V		

Figure 10: PWR-4505 Physical Dimensions

©1995-2017 Dataforth Corporation, All Rights Reserved ISO9001:2008-Registered QMS

SCMXCA006-01, -02, -07

Interface Cables

Description

SCMXCA006-XX

System interface cable for the 8BP04/08/16 backpanels. This is a DB25 Male/Female cable assembly. It can be ordered in lengths of 1m, 2m, and 7m (see Figure 11).

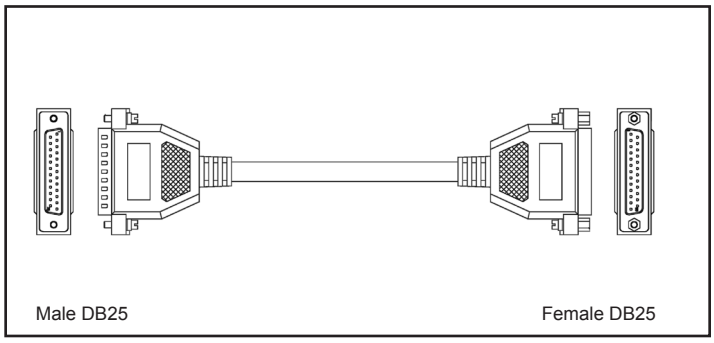

Figure 11: SCMXCA006-XX System Interface Cable

8BXIF (-DIN)

Universal Interface Board

Description

The 8BXIF is a universal interface board which converts a DB25 cable input to 25 screw terminals for discrete wire. It can be mounted on the back of the SCMXRK-002 mounting rack (8BXIF) or on a DIN rail (8BX-IF-DIN). Required mounting hardware is included. Use SCMXCA006-XX cable (see Figure 12 for dimensions).

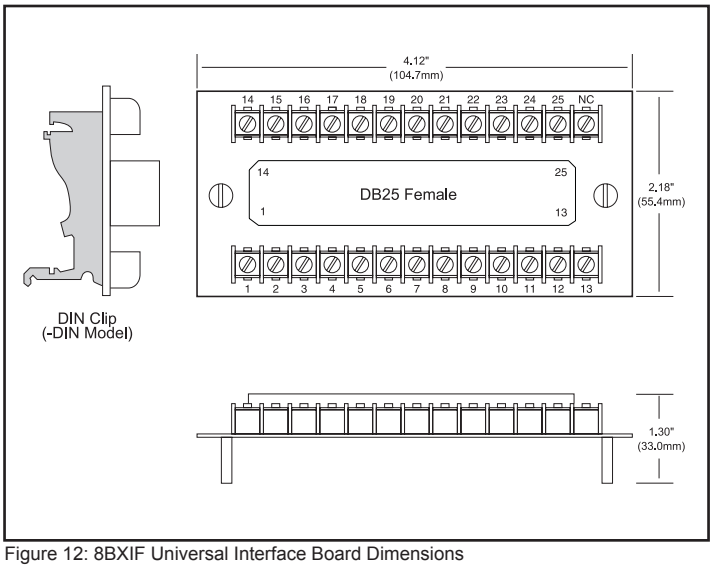

Figure 12: 8BXIF Universal Interface Board Dimensions

SCMXRK-002

19-Inch Metal Mounting Rack

Description

The SCMXRK-002 is a 19-inch metal rack for mounting the 8BP04/08/16 backpanels and the 8BXIF interface board (see Figure 13 for dimensions).

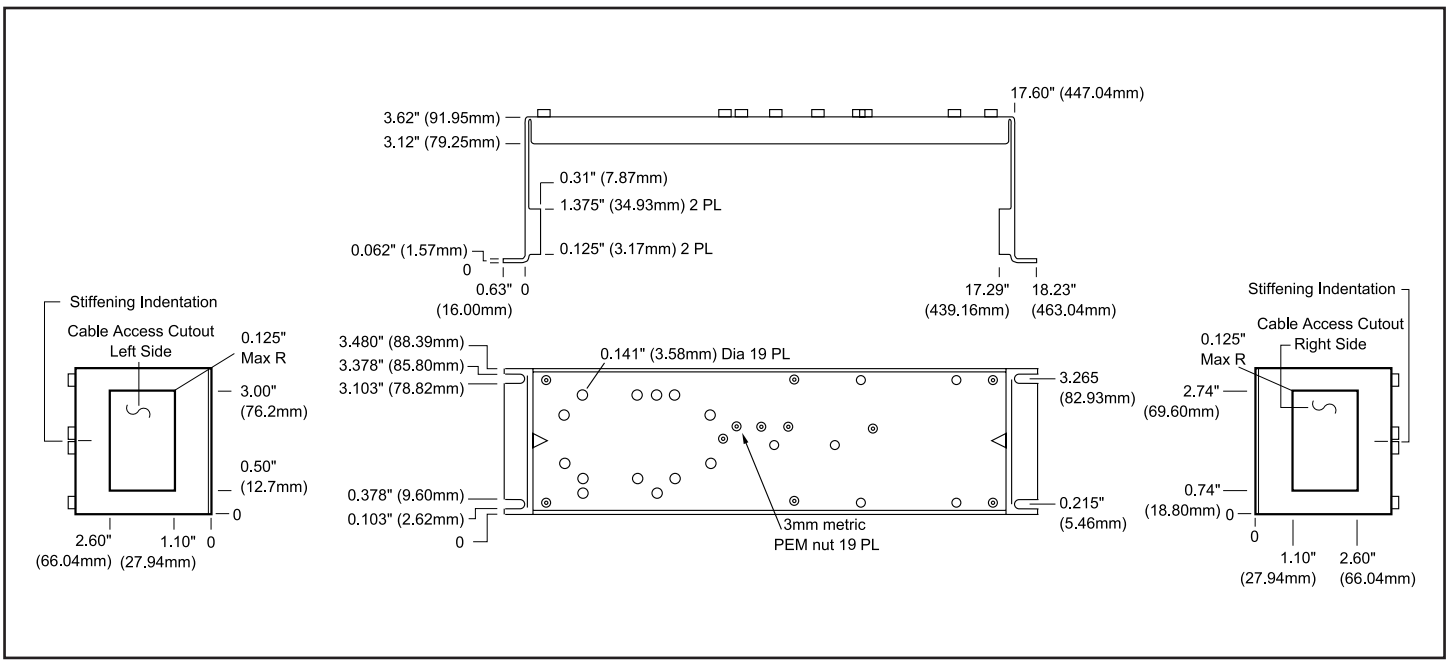

Figure 13: SCMXRK-002 Analog Rack Dimensions

©1995-2017 Dataforth Corporation, All Rights Reserved ISO9001:2008-Registered QMS

SCMXRAIL1-XX, SCMXRAIL2-XX, SCMXRAIL3-XX

DIN Rail

Description

Three styles of DIN rail are available. Specify length (-xx) in meters when ordering, -01 for 1 meter or -02 for 2 meter.

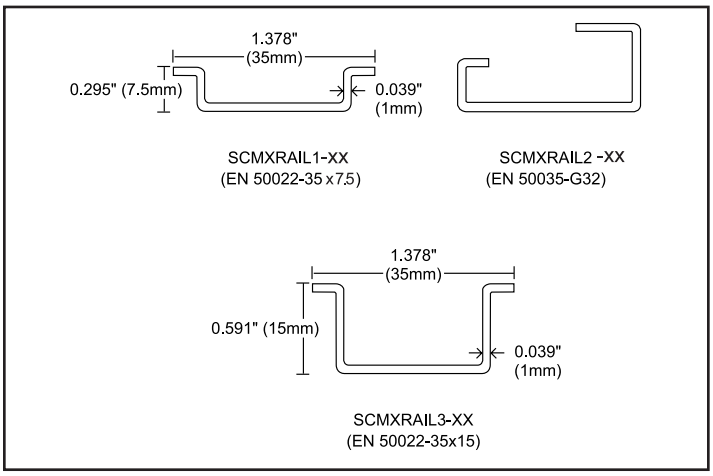

Figure 14: DIN Rail Styles

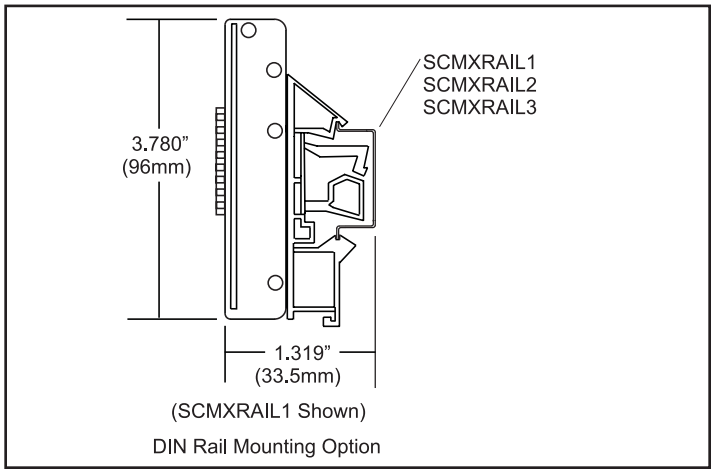

Figure 15: 8BPxx-2, 8BPxx-3 Backpanel DIN Rail Mounting Option

8B-PROTO

Breadboard Kit

Description

The 8B-PROTO breadboard kit was designed to allow users to incorporate their own module functions using an 8B format. The kit includes a PC board with pins designed for breadboard circuits, a module case, header and mounting screw. Contact the factory for additional information.

8BPT

Pass Thru Module

Description

The 8BPT is a pass-through module used to establish a direct connection between an input signal and the 8B series backplane analog bus. It has unity gain and no isolation. It accepts up to ±10V input and provides up to ±10V output.

8BXCJC

Cold Junction Compensation Sensor

Description

Packaged for use in customer designed mounting boards. This part has an initial tolerance of ±0.25% and comes in a standard 1206 resistor format.

©1995-2017 Dataforth Corporation, All Rights Reserved ISO9001:2008-Registered QMS

SCM9B

Isolated, Intelligent Signal Conditioning Products

SCM9B Modules

Dataforth offers high quality SCM9B products providing cost-effective protection and conditioning for a wide range of valuable industrial control signals and systems. Our extensive line includes fixed and programmable sensor-tocomputer and computer-to-analog output interface modules, RS-232/RS-485 converters, RS-485 repeaters, and associated backplanes, accessories, and applications software. All products are European EMC Directive Compliant.

SCM9B-1000/2000/5000/D100
Sensor-to-Computer Modules

These isolated modules provide complete sensor/RS-232C or /RS-485 interfaces with 15-bit measurement resolution. They accept a variety of voltage, current, thermocouple, RTD/thermistor, strain gage, timer/frequency, and multichannel digital inputs/outputs. “2000” Series modules include additional programmable features such as ASCII output scaling to desired engineering units and linearization using straight-line segment approximation. “5000” Series modules provide four analog input channels. D100 Series modules are DIN rail mountable.

SCM9B-3000/4000
Computer-to-Analog Output Modules

These are complete, isolated interfaces designed for remote installation and communications with host computers via standard RS-232C and RS-485 serial ports. They offer 12-bit resolution in a range of analog output voltages and currents. “4000” series modules have fully programmable output slopes, true analog readback, and data scaling.

SCM9B-A1000/2000/D192
Converters and Repeaters

These products convert RS-232C communications signal levels to the correct RS-485 signal requirements, and may also be configured as repeaters to extend communications bus lengths. They are optically isolated, require no external control signals, and are completely transparent to host software.



Features

SCM9B Sensor-to-Computer Modules

- 500Vrms Input Isolation
- Programmable Scaling and Linearization
- ASCII Command/Response Protocol
- 15-bit Measurement Resolution
- Continuous Self-Calibration
- Analog Readback
- DIN Rail Mountable D100 Series

SCM9B Computer-to-Analog Output Modules

- 0-1V, ±1V, 0-5V, ±5V, 0-10V, ±10V, 0-20mA, 4-20mA Output Ranges
- 500Vrms Output Isolation
- 12-Bit Output Resolution
- Programmable 0.01V/s (mA/s) to 10,000V/s (mA/s) Output Slopes

SCM9B Converters and Repeaters

- Transparent to Host
- Optically Isolated Bidirectional Data Flows
- Automatic Internal RS-485 Bus Supervision
- DIN Rail Mountable D192 Model

All SCM9B Modules

- CE Compliant
- Manufactured per RoHS II Directive 2011/65/EU

©1995-2017 Dataforth Corporation, All Rights Reserved ISO9001:2008-Registered QMS

SCM9B Selection Guide

SCM9B-1000/2000 Sensor-to-Computer Products
("2000" Series products have user-programmable features)

MODEL	INPUT RANGE	OUTPUT
Voltage Inputs		
SCM9B-1101/2101	±10mV	RS-232C
SCM9B-1102/2102	±10mV	RS-485
SCM9B-1111/2111	±100mV	RS-232C
SCM9B-1112/2112	±100mV	RS-485
SCM9B-1121/2121	±1V	RS-232C
SCM9B-1122/2122	±1V	RS-485
SCM9B-1131/2131	±5V	RS-232C
SCM9B-1132/2132	±5V	RS-485
SCM9B-1141/2141	±10V	RS-232C
SCM9B-1142/2142	±10V	RS-485
SCM9B-1151/2151	±100V	RS-232C
SCM9B-1152/2152	±100V	RS-485
Current Inputs		
SCM9B-1211/2211	±10mA	RS-232C
SCM9B-1212/2212	±10mA	RS-485
SCM9B-1221/2221	±1mA	RS-232C
SCM9B-1222/2222	±1mA	RS-485
SCM9B-1231/2231	±100mA	RS-232C
SCM9B-1232/2232	±100mA	RS-485
SCM9B-1241/2241	±1A	RS-232C
SCM9B-1242/2242	±1A	RS-485
SCM9B-1251/2251	4-20mA	RS-232C
SCM9B-1252/2252	4-20mA	RS-485
Thermocouple Inputs		
SCM9B-1311	J Thermocouple	RS-232C
SCM9B-1312	J Thermocouple	RS-485
SCM9B-1321	K Thermocouple	RS-232C
SCM9B-1322	K Thermocouple	RS-485
SCM9B-1331	T Thermocouple	RS-232C
SCM9B-1332	T Thermocouple	RS-485
SCM9B-1341	E Thermocouple	RS-232C
SCM9B-1342	E Thermocouple	RS-485
SCM9B-1351	R Thermocouple	RS-232C
SCM9B-1352	R Thermocouple	RS-485
SCM9B-1361	S Thermocouple	RS-232C
SCM9B-1362	S Thermocouple	RS-485
SCM9B-1371	B Thermocouple	RS-232C
SCM9B-1372	B Thermocouple	RS-485
SCM9B-1381	C Thermocouple	RS-232C
SCM9B-1382	C Thermocouple	RS-485
RTD Inputs		
SCM9B-1411	.00385 RTD	RS-232C
SCM9B-1412	.00385 RTD	RS-485
SCM9B-1421	.00392 RTD	RS-232C
SCM9B-1422	.00392 RTD	RS-485
SCM9B-1431	.00388 RTD	RS-232C
SCM9B-1432	.00388 RTD	RS-485
SCM9B-1451	2252Ω Thermistor	RS-232C
SCM9B-1452	2252Ω Thermistor	RS-485
SCM9B-1461	TD Thermistor	RS-232C
SCM9B-1462	TD Thermistor	RS-485

MODEL	INPUT RANGE	OUTPUT
Strain Gage Inputs		
SCM9B-1511/2511	±30mV Bridge, 5V Excitation	RS-232C
SCM9B-1512/2512	±30mV Bridge, 5V Excitation	RS-485
SCM9B-1521/2521	±30mV Bridge, 10V Excitation	RS-232C
SCM9B-1522/2522	±30mV Bridge, 10V Excitation	RS-485
SCM9B-1531/2531	±100mV Bridge, 5V Excitation	RS-232C
SCM9B-1532/2532	±100mV Bridge, 5V Excitation	RS-485
SCM9B-1541/2541	±100mV Bridge, 10V Excitation	RS-232C
SCM9B-1542/2542	±100mV Bridge, 10V Excitation	RS-485
SCM9B-1551/2551	1-6V Bridge, 8V Excitation	RS-232C
SCM9B-1552/2552	1-6V Bridge, 8V Excitation	RS-485
SCM9B-1561/2561	1-6V Bridge, 10V Excitation	RS-232C
SCM9B-1562/2562	1-6V Bridge, 10V Excitation	RS-485
Timer/Frequency Inputs		
SCM9B-1601/2601	Frequency	RS-232C
SCM9B-1602/2602	Frequency	RS-485
SCM9B-1611/2611	Timer	RS-232C
SCM9B-1612/2612	Timer	RS-485
SCM9B-1621	Event Counter	RS-232C
SCM9B-1622	Event Counter	RS-485
SCM9B-1631/2631	Accumulator, Frequency	RS-232C
SCM9B-1632/2632	Accumulator, Frequency	RS-485
SCM9B-1641/2641	Accumulator, Timer	RS-232C
SCM9B-1642/2642	Accumulator, Timer	RS-485

MODEL	DIGITAL INPUT	DIGITAL OUTPUT	RS OUTPUT
Digital Inputs/Outputs			
SCM9B-1701	7	8	RS-232C
SCM9B-1702	7	8	RS-485
SCM9B-1711	15 and/or	15	RS-232C
SCM9B-1712	15 and/or	15	RS-485

SCM9B-5000 Four Channel Sensor-to-Computer Products

MODEL	INPUT RANGE	OUTPUT
Voltage Inputs		
SCM9B-5111	±100mV	RS-232C
SCM9B-5112	±100mV	RS-485
SCM9B-5121	±1V	RS-232C
SCM9B-5122	±1V	RS-485
SCM9B-5131	±5V	RS-232C
SCM9B-5132	±5V	RS-485
SCM9B-5141	±10V	RS-232C
SCM9B-5142	±10V	RS-485
SCM9B-5151	±100V	RS-232C
SCM9B-5152	±100V	RS-485
Current Inputs		
SCM9B-5251	4-20mA	RS-232C
SCM9B-5252	4-20mA	RS-485
Thermocouple Inputs		
SCM9B-5311	J Thermocouple	RS-232C
SCM9B-5312	J Thermocouple	RS-485
SCM9B-5321	K Thermocouple	RS-232C
SCM9B-5322	K Thermocouple	RS-485
SCM9B-5331	T Thermocouple	RS-232C
SCM9B-5332	T Thermocouple	RS-485
SCM9B-5341	E Thermocouple	RS-232C
SCM9B-5342	E Thermocouple	RS-485
Thermistor inputs		
SCM9B-5451	2252Ω Thermistor	RS-232C
SCM9B-5452	2252Ω Thermistor	RS-485

©1995-2017 Dataforth Corporation, All Rights Reserved ISO9001:2008-Registered QMS

SCM9B Selection Guide (Continued)

SCM9B-D100 DIN Rail Mount Sensor-to-Computer Modules

MODEL	INPUT RANGE	OUTPUT
Voltage Inputs		
SCM9B-D110	±10mV	RS-485
SCM9B-D111	±100mV	RS-485
SCM9B-D112	±1V	RS-485
SCM9B-D113	±5V	RS-485
SCM9B-D114	±10V	RS-485
SCM9B-D115	±100V	RS-485
Current Inputs		
SCM9B-D125	4-20mA	RS-485
Thermocouple Inputs		
SCM9B-D131	J Thermocouple	RS-485
SCM9B-D132	K Thermocouple	RS-485
SCM9B-D133	T Thermocouple	RS-485
SCM9B-D134	E Thermocouple	RS-485
SCM9B-D135	R Thermocouple	RS-485
SCM9B-D136	S Thermocouple	RS-485
SCM9B-D137	B Thermocouple	RS-485
SCM9B-D138	C Thermocouple	RS-485
RTD/Thermistor Inputs		
SCM9B-D141	.00385 RTD	RS-485
SCM9B-D142	.00392 RTD	RS-485
SCM9B-D143	.00388 RTD	RS-485
SCM9B-D145	2252Ω Thermistor	RS-485
SCM9B-D146	TD Thermistor	RS-485
Timer/Frequency Inputs		
SCM9B-D161	Frequency	RS-485

MODEL	DIGITAL INPUTS	DIGITAL OUTPUTS	RS OUTPUT
Digital Input/Outputs			
SCM9B-D171	6	0	RS-485
SCM9B-D172	0	6	RS-485

SCM9B-3000/4000 Computer-to-Analog Output Products
("4000" Series products have user-programmable features)

MODEL	OUTPUT RANGE	INPUT
Voltage Output		
SCM9B-3121/4121	±1V	RS-232C
SCM9B-3122/4122	±1V	RS-485
SCM9B-3131/4131	±5V	RS-232C
SCM9B-3132/4132	±5V	RS-485
SCM9B-3141/4141	±10V	RS-232C
SCM9B-3142/4142	±10V	RS-485
SCM9B-3161/4161	0 to 1V	RS-232C
SCM9B-3162/4162	0 to 1V	RS-485
SCM9B-3171/4171	0 to 5V	RS-232C
SCM9B-3172/4172	0 to 5V	RS-485
SCM9B-3181/4181	0 to 10V	RS-232C
SCM9B-3182/4182	0 to 10V	RS-485

MODEL	OUTPUT RANGE	INPUT
Current Output		
SCM9B-3251/4251	0 to 20mA	RS-232C
SCM9B-3252/4252	0 to 20mA	RS-485
SCM9B-3261/4261	4 to 20mA	RS-232C
SCM9B-3262/4262	4 to 20mA	RS-485

SCM9B-A1000/A2000 Converters/Repeaters

MODEL	DESCRIPTION
SCM9B-A1000-115	RS-232C/RS-485 Converter/Repeater, 115VAC
SCM9B-A1000-230	RS-232C/RS-485 Converter/Repeater, 230VAC
SCM9B-A2000	RS-232C/RS-485 Converter/Repeater, +10 to +30VDC

SCM9B-D192 DIN Rail Mount RS-485 Repeater

MODEL	DESCRIPTION
SCM9B-D192	RS-485 Repeater

SCM9B-H1700 Digital I/O Boards

MODEL	DESCRIPTION
SCM9B-H1750	24 Digital Inputs/Outputs
SCM9B-H1770	64 Digital Inputs/Outputs
SCM9B-HCA1	4 Ribbon Connector Assembly

Accessories and Software

MODEL	DESCRIPTION
SCM9B-PB08	8 Channel Backpanel
SCM9B-PB14	14 Channel Backpanel
SCM9B-S300	Utility Software
MA-1001	User's Manual, SCM9B-1000
MA-1002	User's Manual, SCM9B-2000
MA-1003	User's Manual, SCM9B-3000/4000
MA-1004	User's Manual, SCM9B-1700
MA-1005	User's Manual, SCM9B-A1000/A2000
MA-1011	User's Manual, SCM9B-5000
MA-1013	User's Manual, SCM9B Modbus® Protocol
MA-1014	User's Manual, SCM9B-D100

SCM9B Reliability Data

Failure rate calculations for the SCM9B modules are derived from the MIL-HDBK-217E specification. The stress-analysis method is used at naval sheltered environments, 40°C temperature, and quality level of B-2. Our specified humidity level is 95% RH noncondensing.

MODEL	FAILURES/106 HRS	MTBF (HRS)
SCM9B-1xxx/2xxx/3xxx/4xxx/5xxx	9.52	105,000
SCM9B-17xx	8.16	123,000

For SCM9B data sheets, go to www.dataforth.com/signal_conditioning.aspx and click on the 9B Analog to Serial Isolated Modules button.

©1995-2017 Dataforth Corporation, All Rights Reserved ISO9001:2008-Registered QMS

MAQ®20

Industrial Data Acquisition & Control System

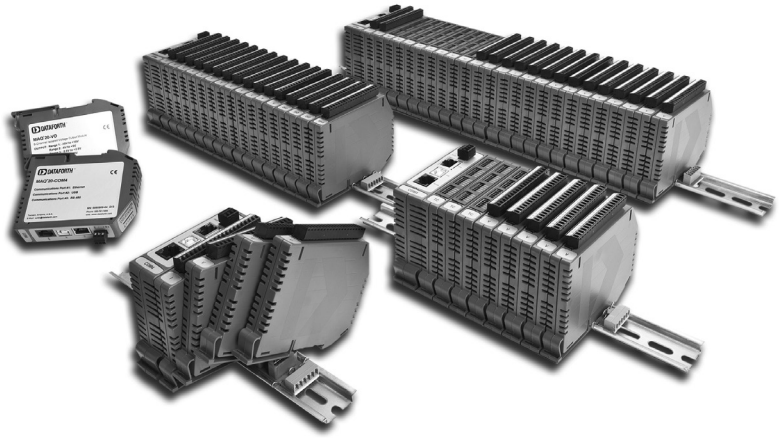

Features

- Industry's Most Affordable Price per Channel
- ±0.035% Accuracy (Typical)
- 1500Vrms Channel-to-Bus Isolation
- Up to 240Vrms Continuous Field I/O Protection
- ANSI/IEEE C37.90.1 Transient Protection
- Direct Connection to Internet Option
- Graphical Control Software
  - ReDAQ® Shape for MAQ20 Software
  - IPEmotion Software
- Advanced Features Including Integral PID Control, Alarms, Counters, Timers, PWMs, and more
  - Up to 32 PID Loops with ReDAQ Shape Sofware
  - Formulas, Data Logger, TEDS, PID, Scripting with IPEmotion Software
- Wide Range 7-34VDC Input Power
- –40°C to +85°C Industrial Operating Temperature
- System is a Modbus® Server & Can Operate Remotely Without Local PC
- Heavy Industrial CE Compliant
- UL/CUL Listing Pending (Class I, Division 2, Groups A, B, C, D)
- ATEX Compliance Pending
- Manufactured per RoHS II Directive 2011/65/EU

Description

The MAQ20 Industrial Data Acquisition and Control System encompasses more than 30 years of design excellence and quality in the industrial test and measurement and process control industry. This powerful, high performance, highly flexible system offers the industry's most affordable price per channel, integral PID loop control, and ±0.035% system accuracy (module dependent). It is ideal for test and measurement, factory and process automation, machine automation, military and aerospace, power and energy, environmental monitoring, and oil and gas applications. The MAQ20 family consists of DIN rail mounted, programmable, multi-channel, industrially rugged signal conditioning input and output modules and communications modules (Figure 1). Each I/O module has a 1500Vrms isolation barrier between field-side and system-side wiring, and many models offer per-channel isolation. All field wiring terminals are heavily protected against overload, accidental connection of incorrect signals, and ESD. Modules mount on the industry standard 35x7.5mm gull-wing DIN rail. A backbone mounts within the rail providing power and communication interconnections between the communications modules and each I/O module.

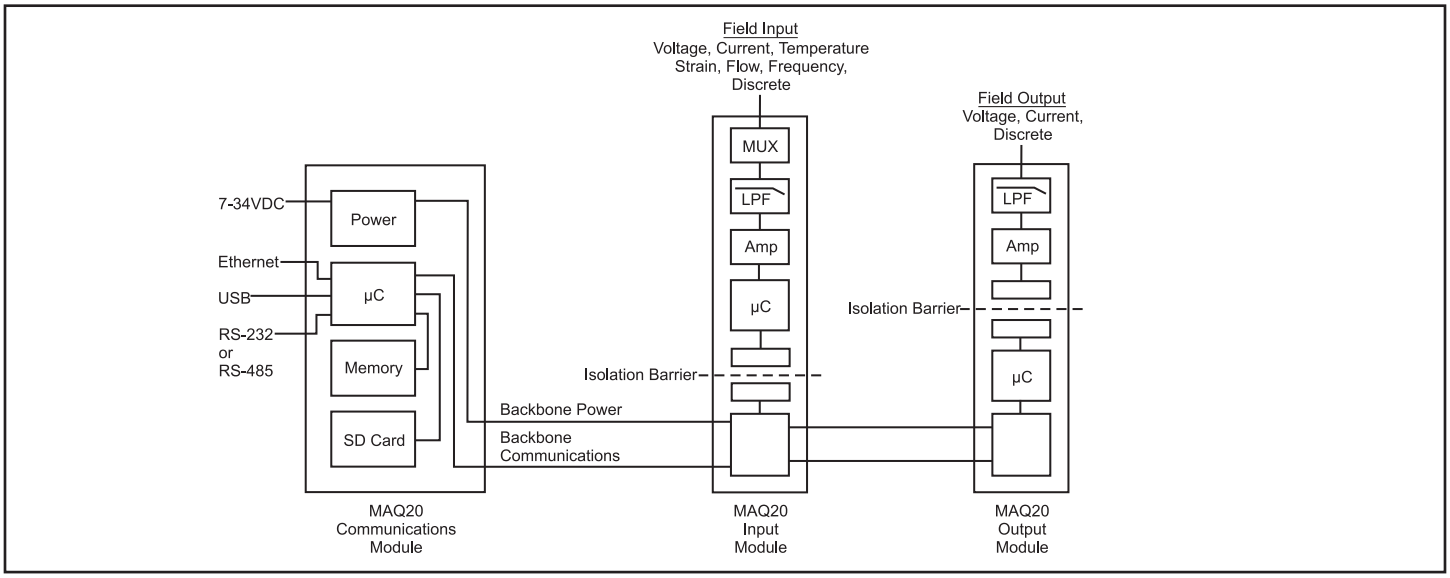

Figure 1: MAQ20 System Block Diagram

©1995-2017 Dataforth Corporation, All Rights Reserved ISO9001:2008-Registered QMS

The Modules: Compact, Flexible, and Powerful

One MAQ20 communications module can interface to up to 24 I/O modules to construct a system with a maximum of 384 channels that fits within a standard 19" instrumentation rack. Processors within each module make this distributed system extremely powerful.

• **Communications Modules:** Ethernet, RS-232, RS-485, and USB with host application software interfacing to the system using Modbus® TCP or Modbus RTU protocol.

• **Analog Input Modules:** Interface to a wide range of standard industrial sensors and equipment and offer up to 16 channels of input, each of which can be independently configured; signal ranges are user selectable and offered in differential and per-channel isolated single-ended configurations.

- **Process Voltage and Process Current Input Modules** offer 8-channel differential input or 16-channel single-ended input for precise measurement of voltage and current signals; all channels are individually configurable for range, alarm limits, and averaging.

- **Thermocouple Input Modules** offer 8 differential input channels, all of which are individually configurable for range, alarm limits, and averaging. Separate models are offered for interfacing to Type J, Type K, Type T and Types R and S sensors.

- **RTD and Potentiometer Input Modules** interface to 2-wire, 3-wire, and 4-wire sensors including five RTD types and potentiometers. Modules offer five or six channels, each configurable for sensor, range, alarm limits, and averaging.

- **Strain Gage Input Module** connects to full, half, and quarter bridge sensors and offers four channels; each channel is configurable for range, alarm limits, averaging, bandwidth, excitation, and gain. Additional features are autozero, shunt cal, and 6-wire connection.

- **Frequency Input Module** accepts zero-crossing and TTL signals with frequencies from 1Hz to 1MHz plus State Change and provides a DC stimulus for contact sensors. This module has eight channels, each configurable for range and alarm limits.

- **Isolated Process Voltage and Process Current Input Modules**◈ offer 8 isolated input channels with multiple ranges and high resolution conversion for precise measurement of voltage and current signals; channels are individually configurable for range, alarm limits, averaging, and high-speed burst scan.



Figure 2: Communications Module with I/O Modules

• **Analog Output Modules: Process Voltage and Process Current Output Modules** drive valves, perform other crucial process operations, and provide up to eight channels of output which can be independently configured.

• **Discrete Input/Output Modules:** Provide multiple channels of isolated AC/DC input and AC/DC output per module and offer advanced special functions as well as alarm capability. Twenty-channel input and 20-channel output models offer low per-channel cost.

- **High Density Input Modules with or without Compliance Voltage** offer 20 input channels that interface to 10-32VDC signals. One model has a 24VDC compliance voltage source on each channel for interfacing to relay contacts, solid state switches, or other devices requiring excitation.

- **High Density Isolated Output Module** provides 20 output channels that can switch up to 60VDC signals and sink up to 3A of current. Channels can be switched individually or in blocks and have user configurable default output states.

- **Discrete Relay Output Module**◈ provides 20 isolated SPST latching relay output channels with contact state readback that can switch between 2A at 30V and 0.4A at 150V. Relays can be controlled individually or in blocks and have user configurable default states.

The **System Backbone** resides within the DIN rail used for module mounting and provides power to and interface between the communications module and the I/O modules. Modules mount on industry standard 35x7.5mm gull-wing DIN rails.

◈Preliminary at date of printing. Contact factory for availability.



Figure 3: IPEmotion Screen Shots

©1995-2017 Dataforth Corporation, All Rights Reserved ISO9001:2008-Registered QMS

Outstanding Functionality

The MAQ20 system can operate remotely without host PC intervention. It also can operate as a standalone data logger. Additional features include:

- Up to 4GB of logged data can be transferred via FTP during real-time acquisition
- System firmware automatically registers installation and removal of I/O modules
- Load share power supply modules enable system expansion, standby and redundant power
- Hot swappable I/O modules with field-side pluggable terminal blocks on most models
- Sophisticated packaging allows high density mounting in 3U increments
- I/O modules can be mounted remotely from the communications module

Output modules are programmable for user-defined waveforms. Discrete I/O modules offer seven high level functions including pulse/frequency counter, pulse/frequency counter with de-bounce, waveform measurement, time between events, frequency generator, PWM generator, and one-shot pulse generator.

System power is connected to the communications module, which in turn powers the I/O modules. For systems with power supply requirements greater than those the communications module provides, the MAQ20-PWR3 load share power supply module can provide additional power. When a MAQ20 I/O module is inserted into a system, module registration occurs automatically, data acquisition starts, and data is stored locally in the module. The system is based on a Modbus® compatible memory map, which ensures easy access to acquired data, configuration settings, and alarm limits. Information is stored in consistent locations from module to module for ease of use and system design.

Software Options

The options for intuitive graphical control software include:

- ReDAQ® Shape Graphical HMI Design & Runtime Solution
- IPEmotion Advanced Control & Mathematical Functions Solution

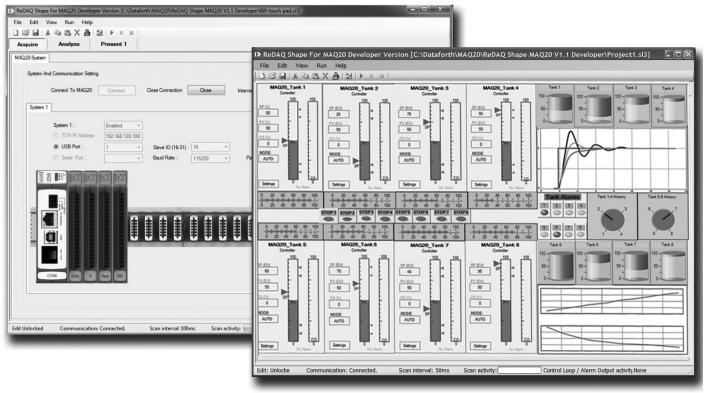

Figure 4: ReDAQ Shape for MAQ20 Screen Shots

The MAQ20 system comes with free configuration software; programming examples and LabVIEW™ VIs are also available.

Leading-Edge PID Loop Control

The MAQ20 provides PID loop control with both software packages that support the system: ReDAQ Shape for MAQ20 and IPEmotion. With ReDAQ Shape, the powerful Dataforth MAQ20 communications module is capable of autonomously running up to 32 PID control loops; faceplates within the software enable an engineer or operator to configure the many features of loop control and monitor processes. With IPEmotion software, PID loop control is extensive and highly functional. Additional advanced features include formulas, data logging, TEDS, and scripting. Typical PID applications include steam, water, and chemical flow control; tank level control; heat-exchanger / reactor temperature control, and pressure control.

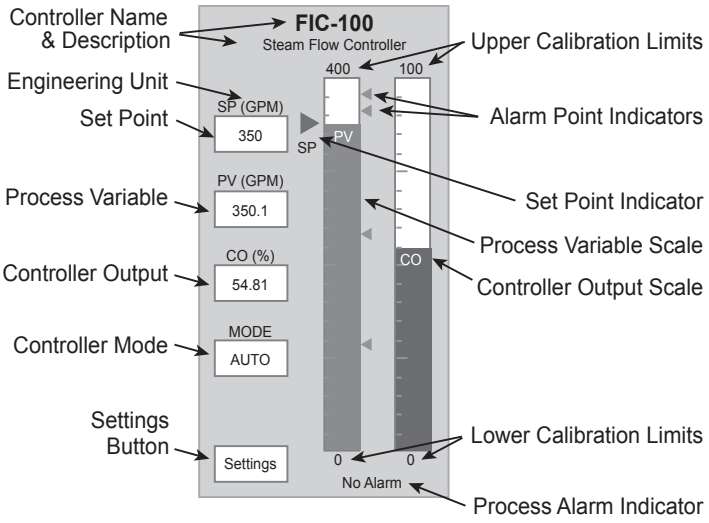

Figure 5: PID Faceplate in ReDAQ Shape Software

Like all Dataforth products, the MAQ20 system provides exceptional isolation, protection, accuracy, and reliability. All MAQ20 modules are designed for installation in Class I, Division 2 hazardous locations and have a high level of immunity to environmental noise commonly found in heavy industrial environments.

©1995-2017 Dataforth Corporation, All Rights Reserved ISO9001:2008-Registered QMS

MAQ®20 Data Acquisition System Selection Guide

COMMUNICATIONS MODULES Page 154

MODEL	DESCRIPTION
MAQ20-COM2	Communications Module; Ethernet, USB, RS-232
MAQ20-COM4	Communications Module, Ethernet; USB, RS-485

VOLTAGE & CURRENT ANALOG INPUT MODULES Page 156

MODEL	DESCRIPTION
MAQ20-MVDN	Analog Input Module; mV, 8-ch, Differential
MAQ20-VSN	Analog Input Module; V, 16-ch, Single Ended
MAQ20-VDN	Analog Input Module; V, 8-ch, Differential
MAQ20-ISN	Analog Input Module; mA, 16-ch, Single Ended
MAQ20-IDN	Analog Input Module; mA, 8-ch, Differential

ISOLATED VOLTAGE & CURRENT ANALOG INPUT MODULES Page 158

MODEL	DESCRIPTION
MAQ20-ISOMV1◈	Analog Input Module; mV, 8-ch, Isolated ch-ch
MAQ20-ISOV1◈	Analog Input Module; V, 8-ch, Isolated ch-ch
MAQ20-ISOI1◈	Analog Input Module; mA, 8-ch, Isolated ch-ch

THERMOCOUPLE ANALOG INPUT MODULES Page 160

MODEL	DESCRIPTION
MAQ20-JTC	Analog Input Module; Type J Thermocouple, 8-ch
MAQ20-KTC	Analog Input Module; Type K Thermocouple, 8-ch
MAQ20-TTC	Analog Input Module; Type T Thermocouple, 8-ch
MAQ20-RSTC	Analog Input Module; Type R and Type S Thermocouple, 8-ch

RTD and POTENTIOMETER ANALOG INPUT MODULES Page 162

MODEL	DESCRIPTION
MAQ20-RTD31	Analog Input Module; RTD/Potentiometer, 3-wire, Type Pt and Ni, 6-ch
MAQ20-RTD41	Analog Input Module; RTD, 4-wire, Type Pt and Ni, 5-ch

STRAIN GAGE ANALOG INPUT MODULE Page 164

MODEL	DESCRIPTION
MAQ20-BRDG1	Analog Input Module; Bridge/Strain Gage, 4-ch

FREQUENCY ANALOG INPUT MODULE Page 166

MODEL	DESCRIPTION
MAQ20-FREQ	Analog Input Module; Frequency, 8-ch

VOLTAGE & CURRENT ANALOG OUTPUT MODULES Page 168

MODEL	DESCRIPTION
MAQ20-VO	Analog Output Module; Voltage, 8-ch
MAQ20-IO	Analog Output Module; Current mA, 8-ch

DISCRETE INPUT / OUTPUT MODULES Page 170

MODEL	DESCRIPTION
MAQ20-DIOL	Discrete Input/Output Module; 3 to 60VDC In, 3 to 60VDC Out, 5-ch In, 5-ch Out
MAQ20-DIOH	Discrete Input/Output Module; 90 to 280VAC/VDC In, 24 to 280VAC Out, 4-ch In, 4-ch Out

DISCRETE HIGH DENSITY INPUT MODULES WITH OR WITHOUT COMPLIANCE VOLTAGE Page 172

MODEL	DESCRIPTION
MAQ20-DIV20	Discrete Input Module; 10 to 32VDC In, 20-ch
MAQ20-DIVC20	Discrete Input Module; 10 to 24VDC In, 24VDC Compliance, 20-ch

◈Preliminary at date of printing. Contact factory for availability.

DISCRETE HIGH DENSITY OUTPUT MODULE Page 174

MODEL	DESCRIPTION
MAQ20-DODC20SK	Discrete Output Module; 10 to 60VDC Out, 20-ch

DISCRETE RELAY OUTPUT MODULE Page 176

MODEL	DESCRIPTION
MAQ20-DORLY20◈	Relay Output Module; 2A at 30V, 0.4A at 150V, 20-ch SPST

SYSTEM BACKBONES Page 178

MODEL	DESCRIPTION
MAQ20-BKPL4	DIN Rail Backbone; Accepting 1 COM Module plus 4 I/O Modules
MAQ20-BKPL8	DIN Rail Backbone; Accepting 1 COM Module plus 8 I/O Modules
MAQ20-BKPL16	DIN Rail Backbone; Accepting 1 COM Module plus 16 I/O Modules
MAQ20-BKPL24	DIN Rail Backbone; Accepting 1 COM Module plus 24 I/O Modules

SOFTWARE Pages 180 and 182

MODEL	DESCRIPTION
MAQ20-940	ReDAQ® Shape Software for MAQ20 – Developer Version
MAQ20-941	ReDAQ Shape Software for MAQ20 – User Version
MAQ20-945	MAQ20 Configuration Software Tool
MAQ20-951	IPEmotion Software for MAQ20 (1 COM module and 1 to 4 I/O modules)
MAQ20-952	IPEmotion Software for MAQ20 (Each additional 4 I/O modules)

POWER SUPPLIES Page 232 in 2017 Full-Line Catalog

PWR-PS5R7W	Power Supply, 24V, 0.3A, 100-240VAC Input
PWR-PS5R15W	Power Supply, 24V, 0.65A, 100-240VAC Input
PWR-PS5R30W	Power Supply, 24V, 1.3A, 100-240VAC Input
PWR-PS5R60W	Power Supply, 24V, 2.5A, 100-240VAC Input
PWR-PS5R120W	Power Supply, 24V, 5.0A, 100-240VAC Input

NOTE: MAQ20 and DSCA use same power supplies.

ACCESSORIES Page 184

Backbone Expansion Cables

MODEL	DESCRIPTION
MAQ20-XCA01	Backbone Expansion Cable; 1 meter (39.4")
MAQ20-XCA02	Backbone Expansion Cable; 2 meter (78.7")

Load Share Power Supply Module

MODEL	DESCRIPTION
MAQ20-PWR3	Load Share Power Supply Module

Cables to Interface 8B Backpanels to MAQ20-VSN Module

MODEL	DESCRIPTION
MAQ20-8B25-0.3	DB25-to-20 pos screw term Transition Cable, 0.3m (11.8") long
MAQ20-8B25-0.6	DB25-to-20 pos screw term Transition Cable, 0.6m (23.6") long
MAQ20-8B25-0	DB25-to-20 pos screw term Transition Cable, 1.0m (39.4") long

USB and Ethernet Cables and Adapters

MODEL	DESCRIPTION
SLX147-01, -02, -05	USB Cable, Type A to Type B; 1m (39.4"), 2m (78.7"), 5m (196.9")
SLX141-01, -02, -07	Ethernet Cable, 1m (39.4"), 2m (78.7"), 7m (275.6")
SLX141-X01, -X02, -X07	Ethernet Crossover Cable, 1m (39.4"), 2m (78.7"), 7m (275.6")
SLX146-02, -07	Null Modem Serial Cable, Female DB-9 to Female DB-9; 2m (78.7"), 7m (275.6")
SLX142, 143	RJ45 to DB9 Adapters
SLX144	RJ45 RS-485 Multidrop Adapter

MAQ20 Demonstration Suitcase

MODEL	DESCRIPTION
MAQ20DEMO-B	MAQ20 Demonstration Suitcase with Process Simulator for Sales Channels

©1995-2017 Dataforth Corporation, All Rights Reserved ISO9001:2008-Registered QMS

Communications Modules

Provide Connection, Power, Interface

Description

The MAQ20 communications module is offered in two models and provides the connection between a host computer and a MAQ20 Data Acquisition System. MAQ20-COM4 communicates using Ethernet, USB, or RS-485; MAQ20-COM2 uses Ethernet, USB, or RS-232. Ethernet communications use the Modbus® TCP protocol and USB communications are based on the Modbus RTU protocol, which RS-485 and RS-232 communications also use. Serial communications over RS-485 can be either 2-wire or 4-wire.

When using the Ethernet interface, up to four simultaneous socket connections are supported. Serial communications over RS-232 or RS-485 can be run at baud rates as fast as 921.6kbps.

A very useful feature of the MAQ20 system is the capability to store acquired data locally for later analysis. This is provided by the easily accessible and removable 4GB micro-SD memory card that is in the MAQ20-COMx module and can be used to log data acquired from all input modules.

Each MAQ20-COMx module can interface to up to 24 I/O modules in any combination, allowing high channel counts and great flexibility in system configuration.

To power the system, a 7-34VDC power source is connected to the communications module. Regulated and protected supplies within the module then provide power both to the internal circuits and to all I/O modules in the system. When many high power I/O modules are used in a system, MAQ20-PWR3 load share power supply modules can be installed in standard I/O module slots to provide the necessary additional power.

Features

- Connect Host Computer and MAQ20 System
- Communicate using Ethernet, USB, RS-485 or RS-232
- Up to 4 Simultaneous Socket Connections with Ethernet
- Baud Rates to 921.6kbps with RS-232/RS-485
- Follow Modbus® TCP or RTU Protocols
- Store Acquired Data Locally
- Interface to up to 24 I/O Modules
- 50VDC Communications Interface-to-Bus Isolation

To ensure robustness, the communications interface-to-bus isolation is 50VDC and power input terminals are protected against overvoltage, transient, and reverse connections.

As a minimum, a MAQ20 Data Acquisition System must have a communications module, a backbone, and one I/O module.

All MAQ20 modules are designed for installation in Class I, Division 2 hazardous locations and have a high level of immunity to environmental noise commonly present in heavy industrial environments.

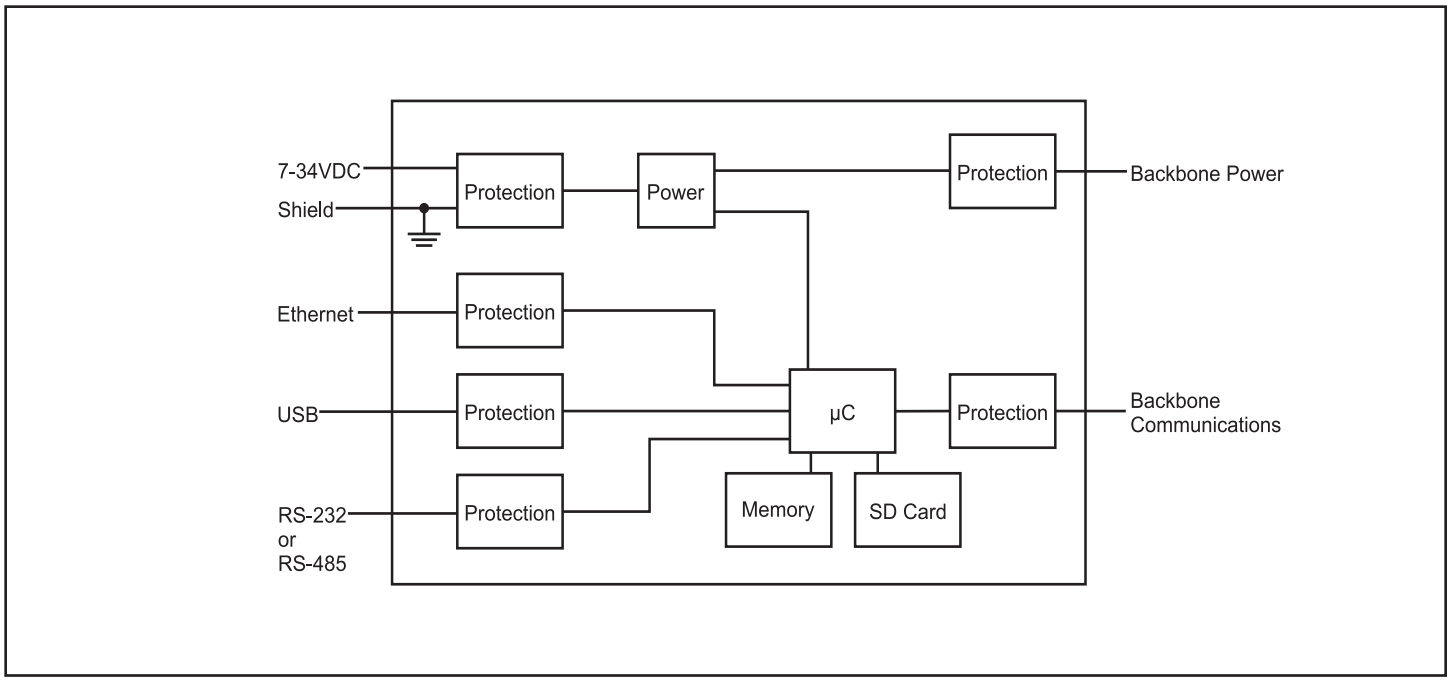

Figure 1: MAQ20 Communications Module Block Diagram

©1995-2017 Dataforth Corporation, All Rights Reserved ISO9001:2008-Registered QMS

Specifications

Typical* at T_A =+25°C and +24VDC system power

Module	Description
MAQ20-COM4 MAQ20-COM2	Ethernet, USB, RS-485 Ethernet, USB, RS-232
Communications Ethernet USB RS-485 RS-232	 10/100 Base-T (1000 Base-T compatible) RJ-45, Modbus® TCP USB 2.0, Type B, Proprietary Modbus over USB 2-wire or 4-wire, up to 921.6kbps, up to 4000 ft, RJ-45, Modbus RTU Up to 921.6kbps, RJ-45, Modbus RTU
CMV Power-to-Bus Communication Port-to-Bus Transient	 50VDC 50VDC ANSI/IEEE C37.90.1
Power Supply Input Power Power to Bus Power Conversion Efficiency Quiescent Current	 7-34VDC at 2A max 5VDC at 3A max 76% 100mA
Dimensions (h)(w)(d)	 4.51" x 1.11" x 3.26" (114.6mm x 28.2mm x 82.8mm)
Environmental Operating Temperature Storage Temperature Relative Humidity Emissions, EN61000-6-4 Radiated, Conducted Immunity EN61000-6-2 RF ESD, EFT	 –40°C to +85°C –40°C to +85°C 0 to 95% Noncondensing ISM Group 1 Class A ISM Group 1 Performance A Performance B
Certifications	Heavy Industrial CE Compliant UL/CUL Listing Pending (Class I, Division 2, Groups A, B, C, D) ATEX Compliance Pending

NOTES:
*Contact factory or your local Dataforth sales office for maximum values.

Power Input Terminal Block Position (top to bottom)	Input Connections	
1	7 – 34 VDC	+
2	7 – 34 VDC	-
3		SHIELD

For full details on module operation, refer to MA1040 – MAQ20 Communications Module Hardware User Manual, available for download at: www.dataforth.com/maq20_download.aspx

Ordering Information

Model	Description
MAQ20-COM4	Ethernet, USB, RS-485
MAQ20-COM2	Ethernet, USB, RS-232



Figure 2: Communications Module

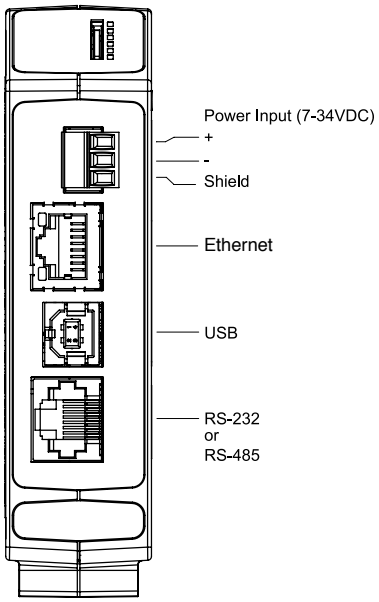

Figure 3: Communications Module Input Connections

©1995-2017 Dataforth Corporation, All Rights Reserved ISO9001:2008-Registered QMS

Analog Input Modules: Process Voltage & Process Current

Interface to Volt, Millivolt, and Milliamp Sensors & Equipment

Description

MAQ20 voltage and current analog input modules interface to a wide range of volt, millivolt, and milliamp sensors and equipment used in industrial and test and measurement applications. They offer 8-channel differential input or 16-channel single-ended input for precise measurement of voltage and current signals. All channels are individually configurable for range, alarm limits, and averaging to match the most demanding applications. High, Low, High-High and Low-Low alarms provide essential monitoring and warning functions to ensure optimum process flow and fail-safe operation. Hardware low-pass filtering in each channel provides rejection of 50 and 60Hz line frequencies. Field I/O connections are made through a pluggable terminal block with four positions provided for the termination of wiring shields.

Input-to-bus isolation is a robust 1500Vrms and each individual channel is protected up to 240Vrms continuous overload in case of inadvertent wiring errors. Overloaded channels do not adversely affect other channels in the module, thereby preserving data integrity.

Channels in a module can be selectively enabled for scanning. All channels are enabled by default; however, non-used channels can be disabled to increase the sampling rate of enabled channels.

Input ranges are selectable on a per-channel basis. The MAQ20-MVDN, -VDN, and -VSN modules have five user selectable input ranges; the MAQ20-IDN and -ISN modules have two. Over-range and under-range up to 2% beyond the specified input values is allowed, and accuracy is guaranteed to ±f.s.

Features

- Interface to Volt, Millivolt, Milliamp Sensors and Equipment
- 8-Channel Differential or 16-Channel Single-Ended Input
- All Channels Individually Configurable for Range, Alarms, Averaging
- 1500Vrms Input-to-Bus Isolation
- Each Channel Protected up to 240Vrms Continuous Overload
- Selective Enabling of Module Channels for Scanning

Cables to interface 8B backpanels to the MAQ20-VSN module are available; the 8B modules and backpanel assembly provide 1500Vrms channel-to-channel isolation.

All MAQ20 modules are designed for installation in Class I, Division 2 hazardous locations and have a high level of immunity to environmental noise commonly present in heavy industrial environments.

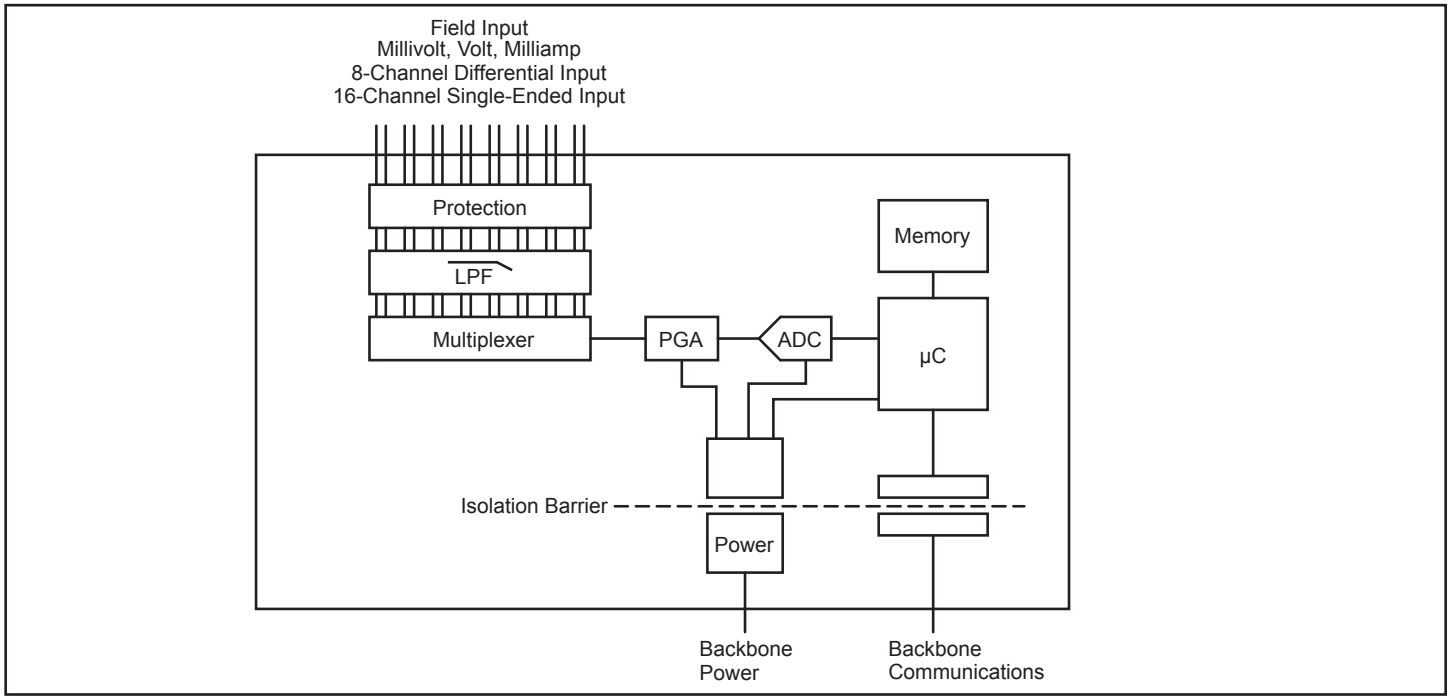

Figure 1: MAQ20 Voltage & Current Input Module Block Diagram

©1995-2017 Dataforth Corporation, All Rights Reserved ISO9001:2008-Registered QMS

Specifications

Typical* at T_A =+25°C and +24VDC system power

Module	Description
MAQ20-MVDN	8-channel, milliVolt, Differential Input ±50mV, ±100mV, ±250mV, ±1.0V (Default), ±2.0V
MAQ20-VDN	8-channel, Volt, Differential Input ±5V (Default), ±10V, ±20V, ±40V, ±60V
MAQ20-VSN	16-channel, Volt, Single-Ended Input ±5V (Default), ±10V, ±20V, ±40V, ±60V
MAQ20-IDN	8-channel, milliAmp, Differential Input 0-20mA (Default), 4-20mA
MAQ20-ISN	16-channel, milliAmp, Single-Ended Input 0-20mA (Default), 4-20mA
Per Channel Setup	Individually configurable for range, alarms, averaging
Input Protection	
Continuous	240Vrms max
Transient	ANSI/IEEE C37.90.1
CMV	
Channel-to-Bus	1500Vrms, 1 min
Channel-to-Channel	±28V peak (-VDN), ±3V peak (-MVDN, -IDN), 0V (-VSN, -ISN)
Transient	ANSI/IEEE C37.90.1
CMR	100dB at 50/60Hz
NMR	30dB at 50/60Hz
Accuracy(1)	±0.035% span
Linearity / Conformity	±0.02% span
Resolution	0.012% span
Stability	
Zero	±15ppm/°C
Span	±35ppm/°C
Bandwidth, –3dB	3Hz
Scan Rate	200 Ch/s
Alarms	High / High-High / Low / Low-Low
Power Supply Current	30mA
Dimensions (h)(w)(d)	4.51" x 0.60" x 3.26" (114.6mm x 15.3mm x 82.8mm)
Environmental	
Operating Temperature	–40°C to +85°C
Storage Temperature	–40°C to +85°C
Relative Humidity	0 to 95% Noncondensing
Emissions, EN61000-6-4	ISM Group 1
Radiated, Conducted	Class A
Immunity EN61000-6-2	ISM Group 1
RF	Performance A ±0.5% Span Error
ESD, EFT	Performance B
Certifications	Heavy Industrial CE Compliant UL/CUL Listing Pending (Class I, Division 2, Groups A, B, C, D) ATEX Compliance Pending

NOTES:
*Contact factory or your local Dataforth sales office for maximum values.
(1) Includes linearity, hysteresis and repeatability.

For input connections and full details on module operation, refer to MA1041 – MAQ20 mV-V-mA Input Module Hardware User Manual, available for download at: www.dataforth.com/maq20_download.aspx

Ordering Information

Model	Description
MAQ20-MVDN	Analog Input Module; mV, 8-ch, Differential
MAQ20-VSN	Analog Input Module; V, 16-ch, Single Ended
MAQ20-VDN	Analog Input Module; V, 8-ch, Differential
MAQ20-ISN	Analog Input Module; mA, 16-ch, Single Ended
MAQ20-IDN	Analog Input Module; mA, 8-ch, Differential

Cables to Interface 8B Backpanels to MAQ20-VSN Module

Model	Description
MAQ20-8B25-0.3	DB25-to-20 pos screw term Transition Cable, 0.3m (11.8") long
MAQ20-8B25-0.6	DB25-to-20 pos screw term Transition Cable, 0.6m (23.6") long
MAQ20-8B25-01	DB25-to-20 pos screw term Transition Cable, 1.0m (39.4") long



Figure 2: 8B Backpanel Interface Cable

Terminal Block Position (top to bottom)	MAQ20-MVDN, MAQ20-VDN & MAQ20-IDN Input Connections	MAQ20-VSN & MAQ20-ISN Input Connections
1	CH0 +IN	CH0 +IN
2	CH0 -IN	CH1 +IN
3	SHIELD	CH0, CH1, CH2, CH3 -IN, SHIELD
4	CH1 +IN	CH2 +IN
5	CH1 -IN	CH3 +IN
6	CH2 +IN	CH4 +IN
7	CH2 -IN	CH5 +IN
8	SHIELD	CH4, CH5, CH6, CH7 -IN, SHIELD
9	CH3 +IN	CH6 +IN
10	CH3 -IN	CH7 +IN
11	CH4 +IN	CH8 +IN
12	CH4 -IN	CH9 +IN
13	SHIELD	CH8, CH9, CH10, CH11 -IN, SHIELD
14	CH5 +IN	CH10 +IN
15	CH5 -IN	CH11 +IN
16	CH6 +IN	CH12 +IN
17	CH6 -IN	CH13 +IN
18	SHIELD	CH12, CH13, CH14, CH15 -IN, SHIELD
19	CH7 +IN	CH14 +IN
20	CH7 -IN	CH15 +IN

©1995-2017 Dataforth Corporation, All Rights Reserved ISO9001:2008-Registered QMS

Analog Input Modules: Process Voltage & Process Current◈

Isolated Channel-to-Channel, High Resolution Conversion, Wide Bandwidth

Description

The MAQ20-ISOMV and MAQ20-ISOV voltage input modules and MAQ20-ISOI current input module offer 8 isolated input channels with multiple signal ranges and high resolution conversion for precise measurement of a wide range of analog voltage and current signals. All channels are individually configurable for range, alarm limits, averaging, and high-speed burst scan to match the most demanding applications. High, Low, High-High and Low-Low alarms provide essential monitoring and warning functions to ensure optimum process flow and fail-safe applications. Signal bandwidth is 5kHz for voltage input and 1.5kHz for current input. The burst scan mode allows up to 10kS/s per channel to be captured simultaneously. Field I/O connections are made through a pluggable terminal block with four positions provided for the termination of wiring shields.

Input-to-bus isolation is a robust 1500Vrms and each individual channel is protected up to 240Vrms continuous overload in case of inadvertent wiring errors. In addition, the MAQ20-ISOMV, -ISOV, and -ISOI modules have 300Vrms continuous channel-to-channel isolation. Overloaded channels do not adversely affect other channels in the module, thereby preserving data integrity.

Signal ranges for the voltage input modules are from ±100mV to ±10V, and for the current input module, 0 to 20mA.

All MAQ20 modules are designed for installation in Class I, Division 2 hazardous locations and have a high level of immunity to environmental noise commonly present in heavy industrial environments.

Features

- 8 Isolated Input Channels with Multiple Ranges and High Resolution Conversion
- Precise Measurement of Wide Range of Analog Voltage and Current Signals
- Channels Individually Configurable for Range, Alarm Limits, Averaging, and High-speed Burst Scan Mode
- 1500Vrms Input-to-Bus Isolation
- 300Vrms Channel-to-Channel Isolation
- Each Channel Protected up to 240Vrms Continuous Overload
- Overloaded Channels Do Not Adversely Affect Other Channels

◈Preliminary at date of printing. Contact factory for availability.

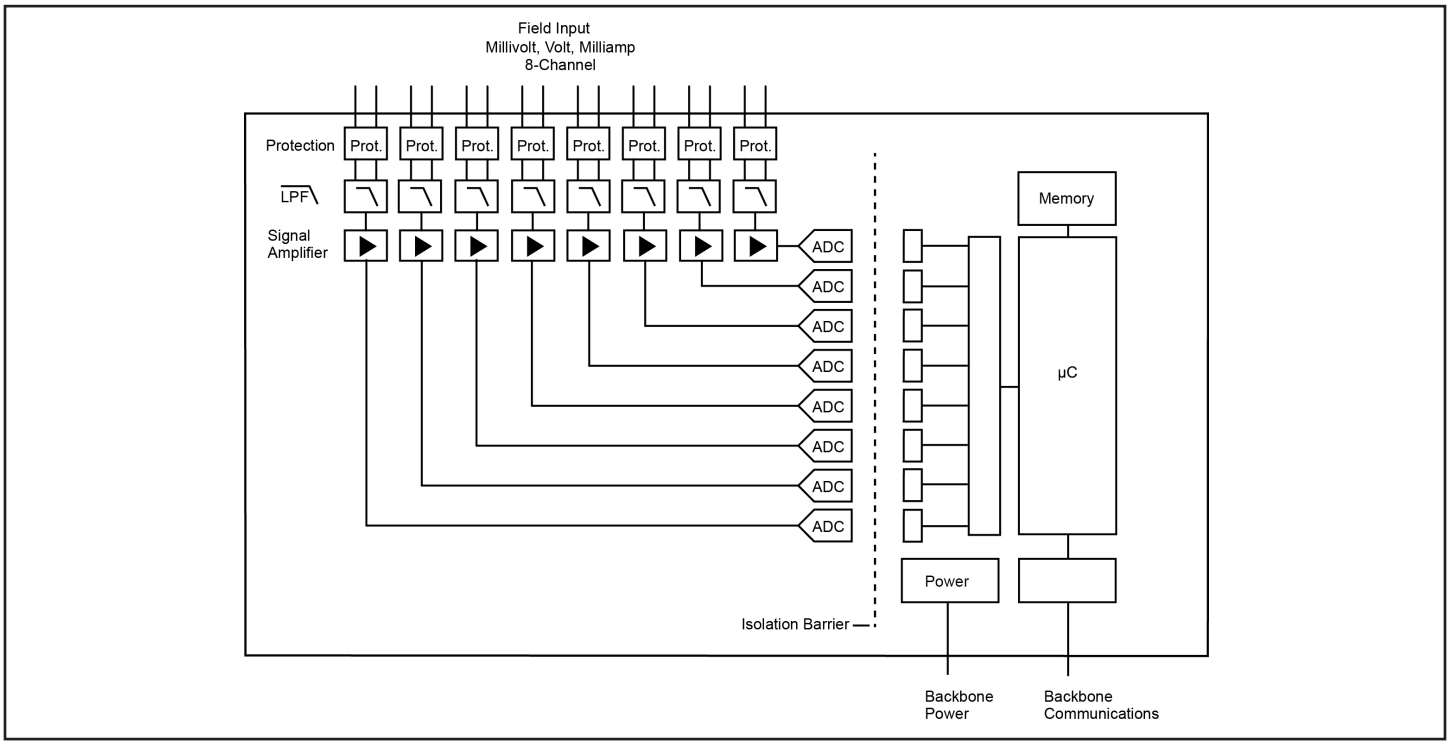

Figure 1: MAQ20-ISOMV/-ISOV/-ISOI Modules Block Diagram

©1995-2017 Dataforth Corporation, All Rights Reserved ISO9001:2008-Registered QMS

Specifications

Typical* at T_A =+25°C and +24VDC system power

Module	Description
MAQ20-ISOMV1◇ MAQ20-ISOV1◇ MAQ20-ISOV2◇ MAQ20-ISOI1◇	0 to +100mV, ±100mV (Default) 0 to +1V, ±1V (Default) 0 to +10V, ±10V (Default) 0-20mA (Default), 4-20mA, ±20mA
Per Channel Setup Input Protection Continuous Transient CMV Channel-to-Bus Channel-to-Channel Transient CMR NMR	Individually configurable for range, alarms, averaging, burst scan 240Vrms max ANSI/IEEE C37.90.1 1500Vrms, 1 min 300Vrms, 425V peak ANSI/IEEE C37.90.1 100dB at 50/60Hz 20dB/decade
Accuracy(1) Linearity / Conformity Resolution Stability Zero Span	±0.035% span ±0.02% span 0.0015% span 15ppm/°C 35ppm/°C
Bandwidth Scan Rate Continuous Burst Alarms Open Input Response mV Input Detection Time Power Supply Current	5kHz Voltage Input, 1.5kHz Current Input 500 Ch/s net, 65 Ch/s at 8-Ch Simultaneous 10kS/s per channel High / High-High / Low / Low-Low Upscale <5s 270mA
Dimensions (h)(w)(d)	3.27" x 4.51" x 0.60" (83.1mm x 114.6mm x 15.3mm)
Environmental Operating Temperature Storage Temperature Relative Humidity Emissions, EN61000-6-4 Radiated, Conducted Immunity EN61000-6-2 RF ESD, EFT	 -40°C to +85°C -40°C to +85°C 0 to 95% Noncondensing ISM Group 1 Class A ISM Group 1 Performance A ±0.5% Span Error Performance B
Certifications	Heavy Industrial CE Compliant ATEX Compliance Pending UL/CUL Listing Pending (Class I, Division 2, Groups A, B, C, D)

NOTES:
*Contact factory or your local Dataforth sales office for maximum values.
◇Preliminary at date of printing. Contact factory for availability.
(1) Includes linearity/conformity, hysteresis and repeatability.

Ordering Information

Model	Description
MAQ20-ISOMV1◇	Isolated Analog Voltage Input Module; ±100mV
MAQ20-ISOV1◇	Isolated Analog Voltage Input Module; ±1V
MAQ20-ISOV2◇	Isolated Analog Voltage Input Module; ±10V
MAQ20-ISOI1◇	Isolated Analog Current Input Module; ±20mA

Terminal Block Position (Top to Bottom)	Input Connections
1	CH0 +IN
2	CH0 -IN
3	SHIELD
4	CH1 +IN
5	CH1 -IN
6	CH2 +IN
7	CH2 -IN
8	SHIELD
9	CH3 +IN
10	CH3 -IN
11	CH4 +IN
12	CH4 -IN
13	SHIELD
14	CH5 +IN
15	CH5 -IN
16	CH6 +IN
17	CH6 -IN
18	SHIELD
19	CH7 +IN
20	CH7 -IN

For input connections and full details on module operation, refer to MA1062 – MAQ20 Ch-Ch Isolated mV-V-mA Input Module Hardware User Manual, available for download at: www.dataforth.com/maq20_download.aspx

©1995-2017 Dataforth Corporation, All Rights Reserved ISO9001:2008-Registered QMS

Analog Input Modules: Thermocouple

Interface to Types J, K, T, R and S Thermocouples

Description

The MAQ20 thermocouple analog input modules have 8 differential input channels. Separate models are offered for interfacing to Type J, Type K, Type T and Types R and S thermocouples. Cold Junction Compensation uses four internal sensors resulting in industry leading measurement accuracy in any system configuration and over the entire system operating temperature range. All channels are individually configurable for range, alarm limits, and averaging to match the most demanding applications. High, Low, High-High and Low-Low alarms provide essential monitoring and warning functions to ensure optimum process flow and fail-safe operation. Hardware low-pass filtering in each channel provides rejection of 50 and 60Hz line frequencies. Field I/O connections are made through spring cage terminal blocks with four positions provided for the termination of wiring shields.

Input-to-bus isolation is a robust 1500Vrms and each individual channel is protected up to 150Vrms continuous overload in case of inadvertent wiring errors. Overloaded channels do not adversely affect other channels in the module, thereby preserving data integrity.

Channels in a module can be selectively enabled for scanning. All channels are enabled by default; however, non-used channels can be disabled to increase the sampling rate of enabled channels.

Input ranges are selectable on a per-channel basis. The MAQ20-JTC, -KTC, -TTC and -RSTC modules have two to four user selectable input ranges, depending on the model. Over-range and under-range up to 2% beyond the specified input values is allowed. Sensor linearization is performed in the module, and accuracy is guaranteed to ±f.s.

Features

- 8 Differential Input Channels
- Interface to Types J, K, T , R and S Thermocouples
- All Channels Individually Configurable for Range, Alarms, Averaging
- 1500Vrms Input-to-Bus Isolation
- Each Channel Protected up to 150Vrms Continuous Overload
- Selective Enabling of Module Channels for Scanning

All MAQ20 modules are designed for installation in Class I, Division 2 hazardous locations and have a high level of immunity to environmental noise commonly present in heavy industrial environments.

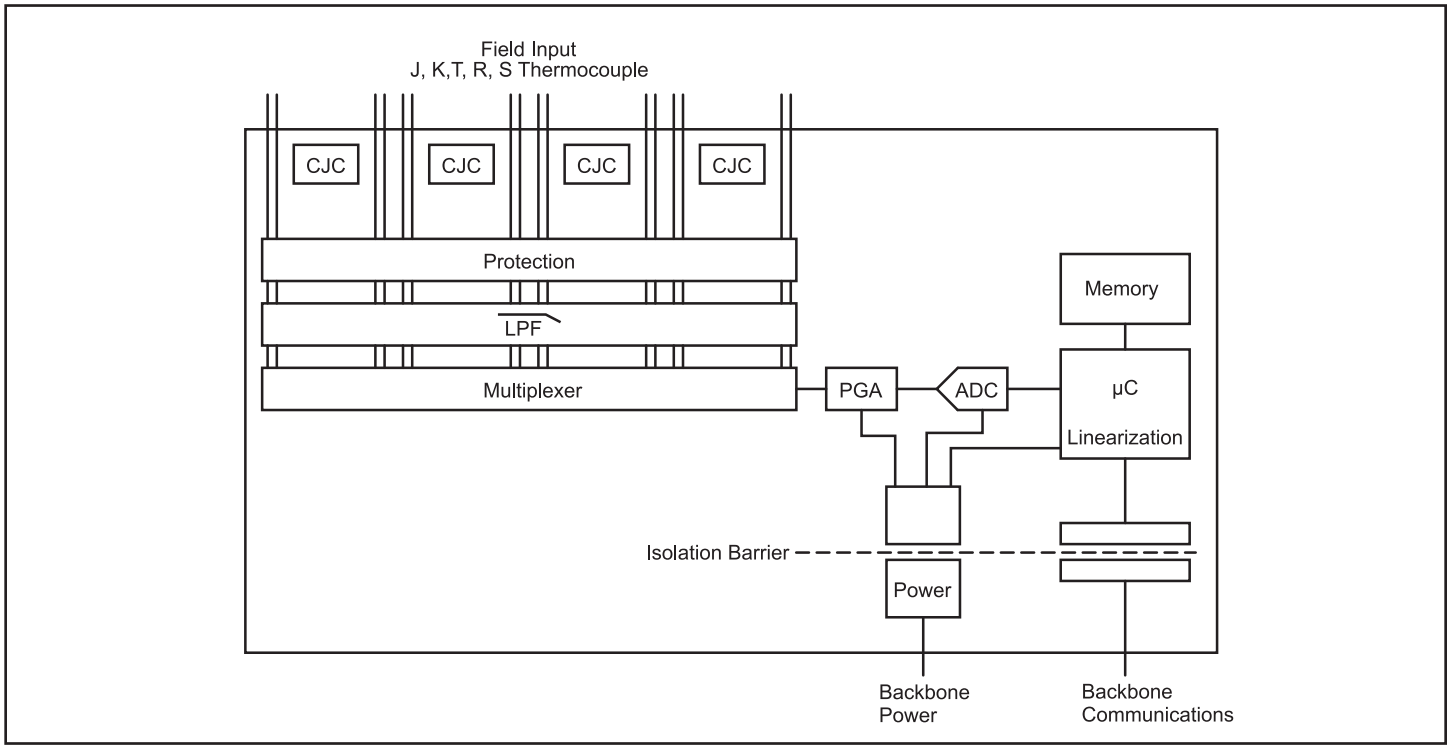

Figure 1: MAQ20 Thermocouple Input Module Block Diagram

©1995-2017 Dataforth Corporation, All Rights Reserved ISO9001:2008-Registered QMS

Specifications

Typical* at T_A =+25°C and +24VDC system power

Module	Description
MAQ20-JTC	8-ch., Type JTC, Differential Input –100°C to +760°C (Default) –100°C to +393°C, –100°C to +199°C
MAQ20-KTC	8-ch., Type KTC, Differential Input –100°C to +1350°C (Default) –100°C to +651°C, –100°C to +332°C
MAQ20-TTC	8-channel, Type TTC, Differential Input –100°C to +400°C (Default), –100°C to +220°C
MAQ20-RSTC	8-channel, Type RTC and Type STC, Differential Input Type R: 0°C to +1750°C (Default), 0°C to +990°C Type S: 0°C to +1750°C, 0°C to +970°C
Per Channel Setup	Individually configurable for range, alarms, averaging
Input Protection	
Continuous	150Vrms max
Transient	ANSI/IEEE C37.90.1
CMV	
Channel-to-Bus	1500Vrms, 1 min
Channel-to-Channel	±3V peak
Transient	ANSI/IEEE C37.90.1
CMR	100dB at 50/60Hz
NMR	26dB at 50/60Hz
Accuracy(1)	±0.06% span
Conformity	±0.035% span
Cold Junction Compensation	±0.25°C at +25°C, ±1.0°C at –40°C to +85°C
Resolution	0.020% span
Stability	
Zero	±15ppm/°C
Span	±35ppm/°C
Bandwidth, –3dB	3Hz
Scan Rate	200 Ch/s
Alarms	High/ High-High / Low / Low-Low
Open Input Response	Downscale, <5s, Flag Set
Power Supply Current	30mA
Dimensions (h)(w)(d)	4.51" x 0.60" x 3.26" (114.6mm x 15.3mm x 82.8mm)
Environmental	
Operating Temperature	–40°C to +85°C
Storage Temperature	–40°C to +85°C
Relative Humidity	0 to 95% Noncondensing
Emissions, EN61000-6-4	ISM Group 1
Radiated, Conducted	Class A
Immunity EN61000-6-2	ISM Group 1
RF	Performance A ±0.5% Span Error
ESD, EFT	Performance B
Certifications	Heavy Industrial CE Compliant UL/CUL Listing Pending (Class I, Division 2, Groups A, B, C, D) ATEX Compliance Pending

NOTES:
*Contact factory or your local Dataforth sales office for maximum values.
(1) Includes conformity, hysteresis and repeatability. Does not include CJC accuracy.

For input connections and full details on module operation, refer to MA1047 – MAQ20 Thermocouple Input Module Hardware User Manual, available for download at: www.dataforth.com/maq20_download.aspx

Ordering Information

Model	Description
MAQ20-JTC	Analog Input Module; Type J Thermocouple, 8-ch
MAQ20-KTC	Analog Input Module; Type K Thermocouple, 8-ch
MAQ20-TTC	Analog Input Module; Type T Thermocouple, 8-ch
MAQ20-RSTC	Analog Input Module; Type R and Type S Thermocouple, 8-ch

Terminal Block Position (top to bottom)	MAQ20-xTC Input Connections
1	CH0 +IN
2	CH0 -IN
3	SHIELD
4	CH1 +IN
5	CH1 -IN
6	CH2 +IN
7	CH2 -IN
8	SHIELD
9	CH3 +IN
10	CH3 -IN
11	CH4 +IN
12	CH4 -IN
13	SHIELD
14	CH5 +IN
15	CH5 -IN
16	CH6 +IN
17	CH6 -IN
18	SHIELD
19	CH7 +IN
20	CH7 -IN

©1995-2017 Dataforth Corporation, All Rights Reserved ISO9001:2008-Registered QMS

Analog Input Modules: RTD and Potentiometer

Interface to 2-Wire, 3-Wire, and 4-Wire Sensors

Description

Two MAQ20 resistance input modules are offered. One interfaces to 2-wire and 3-wire sensors and has 6 input channels; the other interfaces to 4-wire sensors and has 5 input channels. The 2-wire/3-wire module interfaces to 3 types of sensors: 100Ω Pt and 120Ω Ni RTDs, and potentiometers up to 5kΩ; the 4-wire module interfaces to 100Ω Pt and 120Ω Ni RTDs. Precision, low magnitude current sources are used to minimize sensor self-heating and cancel lead resistance errors when using 3-wire sensors. All channels are individually configurable for sensor, range, alarm limits, and averaging to match the most demanding applications. High, Low, High-High and Low-Low alarms provide essential monitoring and warning functions to ensure optimum process flow and fail-safe applications. Hardware low-pass filtering in each channel provides rejection of 50 and 60Hz line frequencies. Field I/O connections are made through a pluggable terminal block with positions designated for the termination of wiring shields.

Input-to-bus isolation is a robust 1500Vrms and each individual channel is protected up to 240Vrms continuous overload in case of inadvertent wiring errors. Overloaded channels do not adversely affect other channels in the module, which preserves data integrity.

Channels in a module can be selectively enabled for scanning. All channels are enabled by default; however, non-used channels can be disabled to increase the sampling rate of enabled channels.

Input sensors and input ranges are selectable on a per-channel basis. One to three ranges are available depending on the input sensor. Over-range and under-range up to 2% beyond the specified input values is allowed. Sensor linearization is performed in the module, and accuracy is guaranteed to ±f.s.

Features

- 6 Input Channels for 2-Wire or 3-Wire Sensors
- 5 Input Channels for 4-Wire Sensors
- Interface to Pt100, Ni120 RTDs, and Potentiometers up to 5kΩ
- All Channels Individually Configurable for Sensor, Range, Alarms, Averaging
- 1500Vrms Input-to-Bus Isolation
- Each Channel Protected up to 240Vrms Continuous Overload
- Selective Enabling of Module Channels for Scanning

All MAQ20 modules are designed for installation in Class I, Division 2 hazardous locations and have a high level of immunity to environmental noise commonly present in heavy industrial environments.

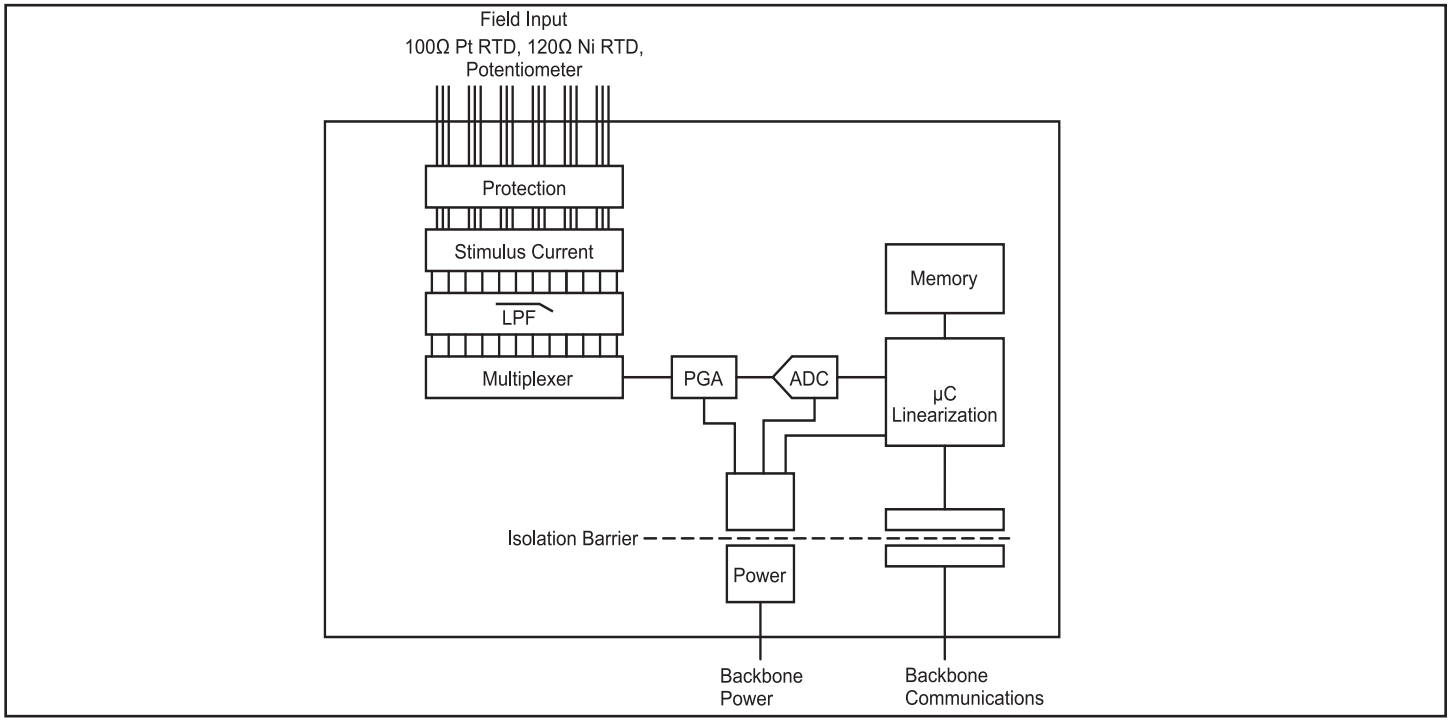

Figure 1: MAQ20-RTD31 RTD and Potentiometer Input Module Block Diagram

©1995-2017 Dataforth Corporation, All Rights Reserved ISO9001:2008-Registered QMS

Specifications

Typical* at T_A =+25°C and +24VDC system power

Module	Description
MAQ20-RTD31	6-channel, 2-wire or 3-wire Pt100, Ni120, Potentiometer Input 100Ω Pt α = 0.00385; –200°C to +850°C (Default) 100Ω Pt100 α = 0.00385; –200°C to +200°C Pt100 α = 0.00385; –100°C to +100°C Ni120 α = 0.00672; –80°C to +300°C Potentiometer 0Ω to 5kΩ
MAQ20-RTD41	5-channel, 4-wire Pt100, Ni120 100Ω Pt α = 0.00385; –200°C to +850°C (Default) 100Ω Pt100 α = 0.00385; –200°C to +200°C Pt100 α = 0.00385; –100°C to +100°C Ni120 α = 0.00672; –80°C to +300°C
Per Channel Setup	Individually configurable for sensor, range, alarms, averaging
Input Protection	
Continuous	240Vrms max
Transient	ANSI/IEEE C37.90.1
CMV	
Channel-to-Bus	1500Vrms, 1 min
Channel-to-Channel	±3V peak
Transient	ANSI/IEEE C37.90.1
CMR	100dB at 50/60Hz
NMR	20dB at 50/60Hz
Accuracy(1)	±0.06% span
Conformity	±0.035% span
Resolution	0.012% span
Stability	
Zero	±50ppm/°C
Span	±35ppm/°C
Bandwidth, –3dB	3Hz
Scan Rate	200 Ch/s
Alarms	High / High-High / Low / Low-Low
Open Input Response	Upscale or Downscale, <5s, Flag Set
Power Supply Current	35mA
Dimensions (h)(w)(d)	4.51” x 0.60” x 3.26” (114.6mm x 15.3mm x 82.8mm)
Environmental	
Operating Temperature	–40°C to +85°C
Storage Temperature	–40°C to +85°C
Relative Humidity	0 to 95% Noncondensing
Emissions, EN61000-6-4	ISM Group 1
Radiated, Conducted	Class A
Immunity EN61000-6-2	ISM Group 1
RF	Performance A ±0.5% Span Error
ESD, EFT	Performance B
Certifications	Heavy Industrial CE Compliant UL/CUL Listing Pending (Class I, Division 2, Groups A, B, C, D) ATEX Compliance Pending

NOTES :
*Contact factory or your local Dataforth sales office for maximum values.
(1) Includes conformity, hysteresis and repeatability.

For input connections and full details on module operation, refer to MA1044 – MAQ20 RTD-Potentiometer Input Module Hardware User Manual, available for download at: www.dataforth.com/maq20_download.aspx

Ordering Information

Model	Description
MAQ20-RTD31	Analog Input Module; RTD/Potentiometer, 2-Wire or 3-Wire, Type Pt and Ni, 6-ch
MAQ20-RTD41	Analog Input Module; RTD, 4-Wire, Type Pt and Ni, 5-ch

Terminal Block Position (top to bottom)	MAQ20-RTD31 Input Connections
1	CH0 +EXC/SHIELD
2	CH0 +IN
3	CH0 -IN
4	CH1 +EXC/SHIELD
5	CH1 +IN
6	CH1 -IN
7	CH2 +EXC/SHIELD
8	CH2 +IN
9	CH2 -IN
10	NC
11	NC
12	CH3 +EXC/SHIELD
13	CH3 +IN
14	CH3 -IN
15	CH4 +EXC/SHIELD
16	CH4 +IN
17	CH4 -IN
18	CH5 +EXC/SHIELD
19	CH5 +IN
20	CH5 -IN

©1995-2017 Dataforth Corporation, All Rights Reserved ISO9001:2008-Registered QMS

Analog Input Module: Strain Gage

Interface to Full, Half, and Quarter Bridge Sensors

Description

The MAQ20 strain gage input module offers 4 input channels and can interface to full, half, and quarter bridge sensors using 4-wire or 6-wire connections. All channels are individually configurable for range, alarm limits, and averaging to match the most demanding applications. In addition, sampling rate, resolution, bandwidth, excitation voltage, and choice of shunt calibration resistors are user settable parameters. Input signals are sampled simultaneously and burst mode can be used to capture fast events. High, Low, High-High and Low-Low alarms provide essential monitoring and warning functions to ensure optimum process flow and fail-safe applications. Hardware low-pass filtering in each channel provides rejection of unwanted frequencies. Field I/O connections are made through spring cage terminal blocks with positions designated for the termination of wiring shields.

Input-to-bus isolation is a robust 1500Vrms and each individual channel is protected up to 30Vrms continuous overload in case of inadvertent wiring errors. Overloaded channels do not adversely affect other channels in the module, which preserves data integrity.

Input ranges are selectable on a per-channel basis. Four ranges are available. Over-range and under-range up to 2% beyond the specified input values is allowed, and accuracy is guaranteed to ±fs.

All MAQ20 modules are designed for installation in Class I, Division 2 hazardous locations and have a high level of immunity to environmental noise commonly present in heavy industrial environments.

Features

- 4 Input Channels for 4-Wire or 6-Wire Sensors
- Bridge Resistance 100Ω to 1kΩ
- Interface to Full, Half and Quarter (with external bridge completion) Sensors
- All Channels Individually Configurable for Range, Alarms, Averaging
- 24-Bit Resolution
- Programmable Sampling Rate & Resolution
- Simultaneous Sampling of Input, Bandwidth Signals
- Burst Mode for Capturing Fast Events
- Programmable Excitation, Shunt Calibration, Remote Sense
- 1500Vrms Input-to-Bus Isolation
- Each Channel Protected up to 30Vrms Continuous Overload

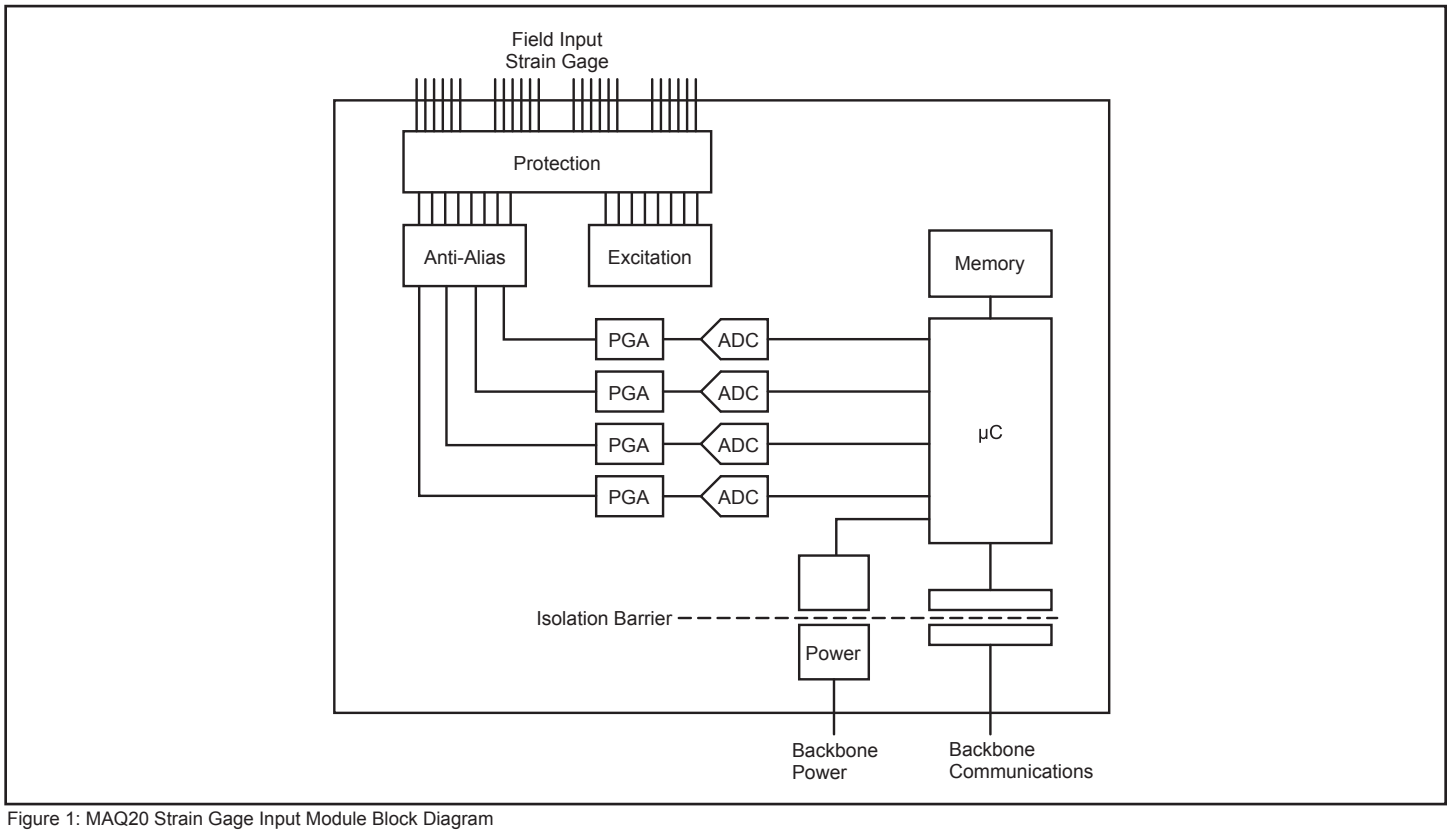

Figure 1: MAQ20 Strain Gage Input Module Block Diagram

©1995-2017 Dataforth Corporation, All Rights Reserved ISO9001:2008-Registered QMS

Specifications

Typical* at T_A =+25°C and +24VDC system power

Module	Description
MAQ20-BRDG1	Full, Half, Quarter Bridge 4-wire or 6-wire connection
Number of Channels Per Channel Setup	4 Individually configurable for range, alarms, averaging
Input Range Input Protection Continuous Transient Excitation Voltage Bridge Resistance Shunt Calibration	±100mV, 0.8mV/V to 40mV/V Sensitivity 30Vrms max ANSI/IEEE C37.90.1 2.5V, 3.333V, 5.0V, 10.0V 100Ω to 1kΩ 60kΩ, 100kΩ, 200kΩ, External
Excitation Protection Continuous Transient CMV Channel-to-Bus Channel-to-Channel Transient CMR NMR	 30Vrms max ANSI/IEEE C37.90.1 1500Vrms, 1 min ±3V peak ANSI/IEEE C37.90.1 100dB at 50/60 Hz 60dB/decade
Accuracy(1) Linearity Resolution ADC Resolution Stability Zero Span	±0.03% span ±0.01% span 0.0005% to 0.005% span 24-bit 50ppm/C 75ppm/C
Bandwidth Scales with Sample Rate Sampling Rate, Simultaneous Alarms Power Supply Current	 Programmable to 17kHz 1kS/s to 32kS/s burst High / High-High / Low / Low-Low 400mA
Dimensions (h)(w)(d)	4.51" x 0.60" x 3.26" (114.6mm x 15.3mm x 82.8mm)
Environmental Operating Temperature Storage Temperature Relative Humidity Emissions, EN61000-6-4 Radiated, Conducted Immunity EN61000-6-2 RF ESD, EFT	 –40°C to +85°C –40°C to +85°C 0 to 95% Noncondensing ISM Group 1 Class A ISM Group 1 Performance A ±0.5% Span Error Performance B
Certifications	Heavy Industrial CE Compliant UL/CUL Listing Pending (Class I, Division 2, Groups A, B, C, D) ATEX Compliance Pending

NOTES :
*Contact factory or your local Dataforth sales office for maximum values.
(1) Includes linearity, hysteresis and repeatability.

Ordering Information

Model	Description
MAQ20-BRDG1	Analog Input Module; Bridge/Strain Gage, 4-ch

Sensor Connection	Terminal	Terminal	Sensor Connection
CH0			
+EXC	1	5	+REMOTE SENSE
-EXC	2	6	-REMOTE SENSE
SHIELD	S	S	SHIELD
+IN	3	7	+SHUNT CAL
-IN	4	8	-SHUNT CAL
CH1			
+EXC	1	5	+REMOTE SENSE
-EXC	2	6	-REMOTE SENSE
SHIELD	S	S	SHIELD
+IN	3	7	+SHUNT CAL
-IN	4	8	-SHUNT CAL
CH2			
+EXC	1	5	+REMOTE SENSE
-EXC	2	6	-REMOTE SENSE
SHIELD	S	S	SHIELD
+IN	3	7	+SHUNT CAL
-IN	4	8	-SHUNT CAL
CH3			
+EXC	1	5	+REMOTE SENSE
-EXC	2	6	-REMOTE SENSE
SHIELD	S	S	SHIELD
+IN	3	7	+SHUNT CAL
-IN	4	8	-SHUNT CAL

For input connections and full details on module operation, refer to MA1046 – MAQ20 Strain Gage Input Module Hardware User Manual, available for download at: www.dataforth.com/maq20_download.aspx

©1995-2017 Dataforth Corporation, All Rights Reserved ISO9001:2008-Registered QMS

Analog Input Module: Frequency

Measure Frequencies to 1MHz

Description

The MAQ20 frequency input module offers 8 input channels for measuring frequencies up to 1MHz. All channels are individually configurable for range and alarm limits to match the most demanding applications. Four controllable outputs can be used for sensor excitation or as 5V logic compatible outputs. High, Low, High-High and Low-Low alarms provide essential monitoring and warning functions to ensure optimum process flow and fail-safe applications. Field I/O connections are made through a pluggable terminal block with positions designated for the termination of wiring shields.

Input-to-bus isolation is a robust 1500Vrms and each individual channel is protected up to 240Vrms continuous overload in case of inadvertent wiring errors.

Channels in a module can be selectively enabled for scanning. All channels are enabled by default; however, non-used channels can be disabled to increase the system sampling rate of enabled channels.

All MAQ20 modules are designed for installation in Class I, Division 2 hazardous locations and have a high level of immunity to environmental noise commonly present in heavy industrial environments.

Features

- 8 Input Channels
- 50mV Sensitivity
- Frequency Range: 1Hz to 1MHz plus State Change
- Operating Range: DC + Signal ≤300Vrms
- All Channels Individually Configurable for Range and Alarms
- 4 Excitation Sources to Power Sensors or Provide 5V Logic Compatible Output
- 1500Vrms Input-to-Bus Isolation
- Each Channel Protected up to 240Vrms
- Selective Enabling of Module Channels for Scanning

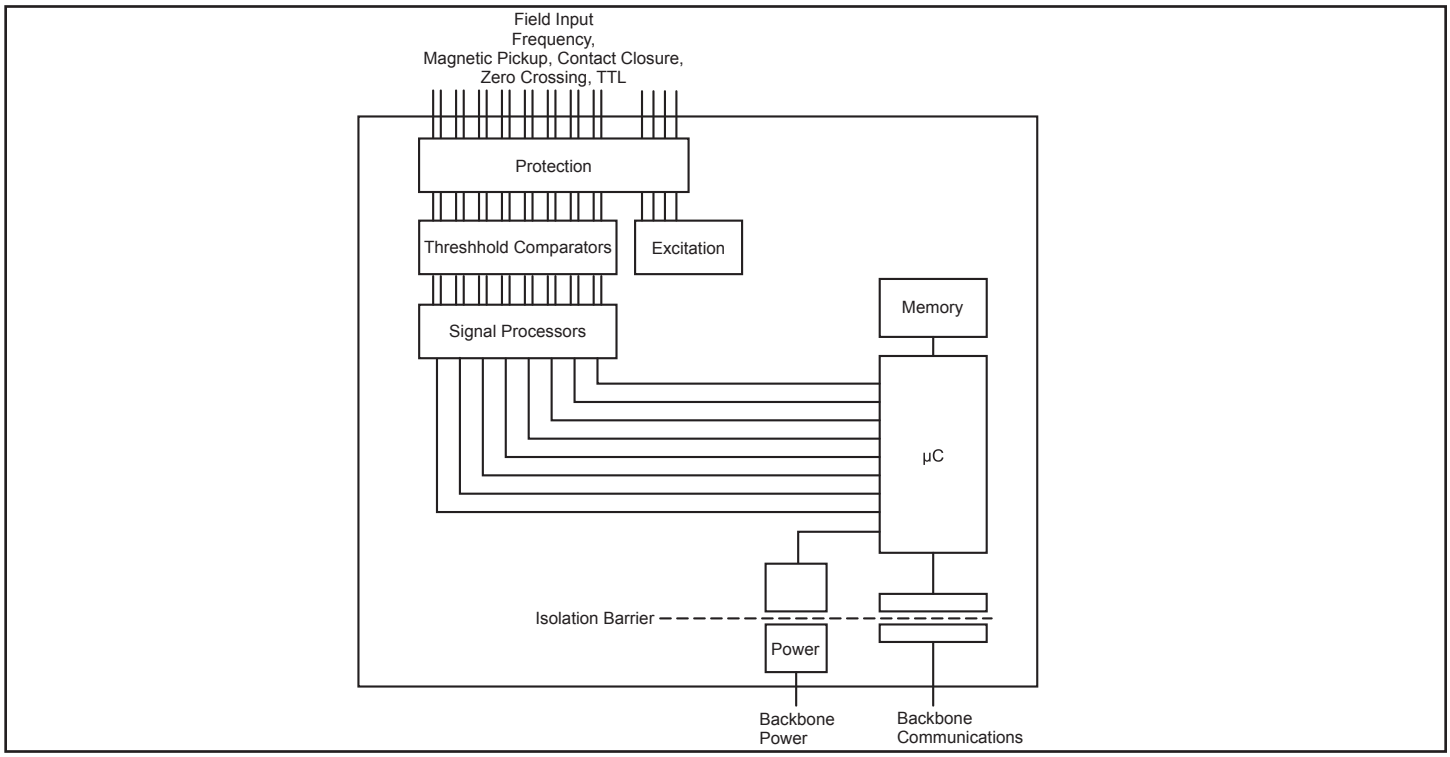

Figure 1: MAQ20 Frequency Input Module Block Diagram

©1995-2017 Dataforth Corporation, All Rights Reserved ISO9001:2008-Registered QMS

Specifications

Typical* at T_A =+25°C and +24VDC system power

Module	Description
MAQ20-FREQ	8-channel, Frequency Input, 1Hz to 1MHz, plus state change detect
Input Signal	50mV Sensitivity Operating Range: DC + signal 300Vrms
Excitation	Four 5V sources at 8mA each Use for sensor excitation or 5V logic compatible output
Per Channel Setup	Individually configurable for range, alarms
Input Protection	
Continuous	240Vrms max
Transient	ANSI/IEEE C37.90.1
CMV	
Channel-to-Bus	1500Vrms, 1 min
Channel-to-Channel	0V
Transient	ANSI/IEEE C37.90.1
Resolution and Accuracy	32 bits
Clock Accuracy	±0.003%
Clock Accuracy Over Temp	±0.01%, –40°C to +85°C
Scan Rate	1000 Ch/s
Alarms	High / High-High / Low / Low-Low
Power Supply Current	400mA
Dimensions (h)(w)(d)	4.51" x 0.60" x 3.26" (114.6mm x 15.3mm x 82.8mm)
Environmental	
Operating Temperature	–40°C to +85°C
Storage Temperature	–40°C to +85°C
Relative Humidity	0 to 95% Noncondensing
Emissions, EN61000-6-4	ISM Group 1
Radiated, Conducted	Class A
Immunity EN61000-6-2	ISM Group 1
RF	Performance A ±0.5% Span Error
ESD, EFT	Performance B
Certifications	Heavy Industrial CE Compliant UL/CUL Listing Pending (Class I, Division 2, Groups A, B, C, D) ATEX Compliance Pending

NOTES :
*Contact factory or your local Dataforth sales office for maximum values.

Ordering Information

Model	Description
MAQ20-FREQ	Analog Input Module; Frequency, 8-ch

Terminal Block Position (top to bottom)	MAQ20-FREQ I/O Connections
1	CH0 +IN
2	CH0 -IN
3	CH1 +IN
4	CH1 -IN
5	EXC0 / OUT0
6	CH2 +IN
7	CH2 -IN
8	CH3 +IN
9	CH3 -IN
10	EXC1 / OUT1
11	CH4 +IN
12	CH4 -IN
13	CH5 +IN
14	CH5 -IN
15	EXC2 / OUT2
16	CH6 +IN
17	CH6 -IN
18	CH7 +IN
19	CH7 -IN
20	EXC3 / OUT3

For input connections and full details on module operation, refer to MA1048 – MAQ20 Frequency Input Module Hardware User Manual, available for download at: www.dataforth.com/maq20_download.aspx

©1995-2017 Dataforth Corporation, All Rights Reserved ISO9001:2008-Registered QMS

Analog Output Modules: Process Voltage & Process Current

8 Isolated Voltage or Current Outputs

Description

The MAQ20 voltage output module and current output module offer 8 isolated voltage or current outputs. All channels are individually configurable for range and programmable output to match the most demanding applications. High-level per-channel isolation gives the module unmatched ruggedness and flexibility while default outputs provide essential functionality for fail-safe systems. User defined waveform outputs allow application-specific sophisticated, autonomous control. Field output connections are made through a pluggable terminal block which simplifies wiring during system setup and reconfiguration.

Input-to-bus isolation is a robust 1500Vrms and channel-to-channel isolation is 300Vrms. In addition, each channel is protected up to 40Vrms continuous overload in case of inadvertent wiring errors.

Channels in a module can be selectively enabled for output. All channels are enabled by default; however, non-used channels can be disabled to increase the refresh rate of enabled channels.

All MAQ20 modules are designed for installation in Class I, Division 2 hazardous locations and have a high level of immunity to environmental noise commonly present in heavy industrial environments.

Features

- 8 Isolated Output Channels
- Voltage or Current Output
- All Channels Individually Configurable for Range and Programmable Output
- User-Defined Default Output and Output Waveform
- 1500Vrms Input-to-Bus Isolation
- 300Vrms Channel-to-Channel Isolation
- Each Channel Protected up to 40Vrms Continuous Overload
- Selective Enabling of Module Channels for Refresh

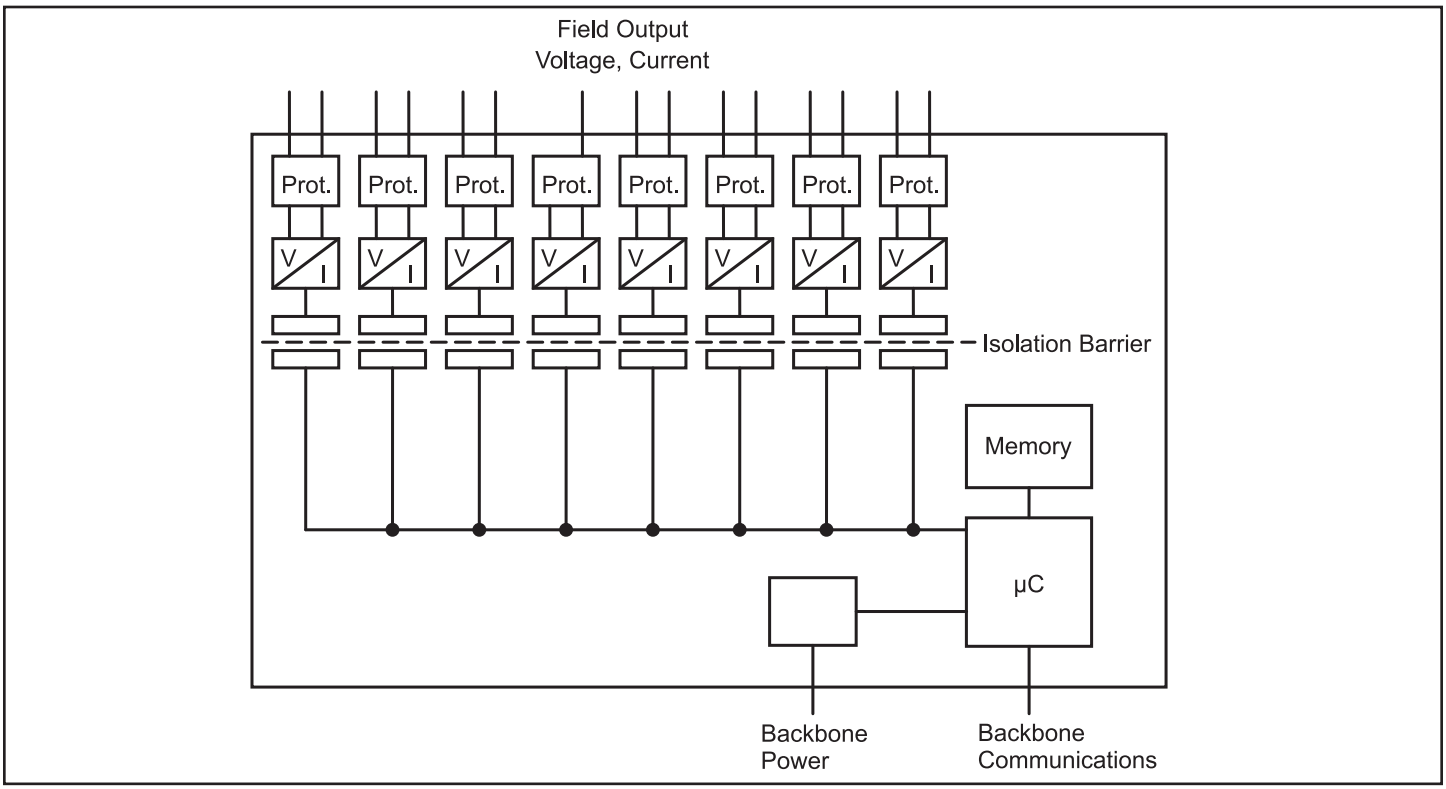

Figure 1: MAQ20 Voltage & Current Output Module Block Diagram

©1995-2017 Dataforth Corporation, All Rights Reserved ISO9001:2008-Registered QMS

Specifications

Typical* at T_A =+25°C and +24VDC system power

Module	Description
MAQ20-VO	8 Isolated Channel Voltage Output 0-2.5V, 0-5V, 0-10V, ±2.5V, ±5V, ±10V (Default)
MAQ20-IO	8 Isolated Channel Current Output 0-20mA (Default), 4-20mA
Per Channel Setup	Individually configurable for range, default output, waveform
MAQ20-VO	
Output Drive (Max Load)	10mA (1000Ω at 10V)
Over-range	10.5V
MAQ20-IO	
Compliance	15VDC
Load Range	0-600Ω
Over-range	21.5mA
Current Limit	26mA
Output Protection	
Continuous	40Vrms max
Transient	ANSI/IEEE C37.90.1
CMV	
Channel-to-Bus	1500Vrms, 1 min
Channel-to-Channel	300Vrms
Transient	ANSI/IEEE C37.90.1
CMR	75dB at 50/60Hz
Accuracy(1)	±0.040% span
Linearity / Conformity	±0.030% span
Resolution	0.024% span
Stability	
Zero	±25ppm/°C
Span	±35ppm/°C
Bandwidth, –3dB	100Hz
Update Rate	1600 Ch/s
Power Supply Current	
MAQ20-VO	270mA at no-load, 480mA at full-load
MAQ20-IO	210mA at no-load, 650mA at full-load
Dimensions (h)(w)(d)	4.51" x 0.60" x 3.26" (114.6mm x 15.3mm x 82.8mm)
Environmental	
Operating Temperature	–40°C to +85°C
Storage Temperature	–40°C to +85°C
Relative Humidity	0 to 95% Noncondensing
Emissions, EN61000-6-4	ISM Group 1
Radiated, Conducted	Class A
Immunity EN61000-6-2	ISM Group 1
RF	Performance A ±0.5% Span Error
ESD, EFT	Performance B
Certifications	Heavy Industrial CE Compliant UL/CUL Listing Pending (Class I, Division 2, Groups A, B, C, D) ATEX Compliance Pending

NOTES:
*Contact factory or your local Dataforth sales office for maximum values.
(1) Includes linearity, hysteresis and repeatability.

Ordering Information

Model	Description
MAQ20-VO	Analog Output Module; Voltage, 8-ch
MAQ20-IO	Analog Output Module; Current mA, 8-ch

Terminal Block Position (top to bottom)	MAQ20-VO & MAQ20-IO Output Connections
1	CH0 +OUT
2	CH0 -OUT
3	CH1 +OUT
4	CH1 -OUT
5	SHIELD
6	CH2 +OUT
7	CH2 -OUT
8	CH3 +OUT
9	CH3 -OUT
10	SHIELD
11	CH4 +OUT
12	CH4 -OUT
13	CH5 +OUT
14	CH5 -OUT
15	SHIELD
16	CH6 +OUT
17	CH6 -OUT
18	CH7 +OUT
19	CH7 -OUT
20	SHIELD

For output connections and full details on module operation, refer to MA1042 – MAQ20 Voltage and Current Output Module Hardware User Manual, available for download at: www.dataforth.com/maq20_download.aspx.

©1995-2017 Dataforth Corporation, All Rights Reserved ISO9001:2008-Registered QMS

Discrete Input / Output Modules

5 Input Channels and 5 Output Channels (MAQ20-DIOL)
4 Input Channels and 4 Output Channels (MAQ20-DIOH)

Description

The MAQ20-DIOL discrete input/output module has 5 isolated discrete input channels and 5 isolated discrete output channels. Input channels accept 3-60VDC signals and output channels switch 3-60VDC signals at up to 3A load.

The MAQ20-DIOH discrete input/output module has 4 isolated discrete inputs and 4 isolated discrete outputs. Input channels accept 90-280VAC/VDC signals and output channels switch 24-280VAC signals at up to 3A AC load. **NOTE: DIOH output channels switch AC loads only.**

Discrete output channels have user configurable default output states which are set up on power up or module reset. In addition to performing standard discrete I/O, the channels can be configured to perform seven special functions: Pulse/Frequency Counter, Pulse/Frequency Counter with De-bounce, Waveform Measurement, Time Between Events, Frequency Generator, Pulse Width Modulation (PWM) Generator, and One-Shot Pulse Generator. Up to four special functions can run simultaneously. High, Low, High-High and Low-Low alarms provide essential monitoring and warning functions to ensure optimum process flow and fail-safe applications. Field I/O connections are made through a pluggable terminal block.

Input-to-bus isolation is a robust 1500Vrms and channel-to-channel isolation is 300Vrms. Each individual channel has continuous overload and reverse connection protection in case of inadvertent wiring errors.

Features

- Rugged Isolation and Protection for Industrial Control
- User-Defined Default Output and Output Waveform
- 7 High Performance Special Functions
- 1500Vrms Input-to-Bus Isolation
- 300Vrms Channel-to-Channel Isolation
- Continuous Overload and Reverse Protection

All MAQ20 modules are designed for installation in Class I, Division 2 hazardous locations and have a high level of immunity to environmental noise commonly present in heavy industrial environments.

IMPORTANT: The DIOH module can only switch AC loads, not DC. The output switch is AC only with zero-crossing detection.

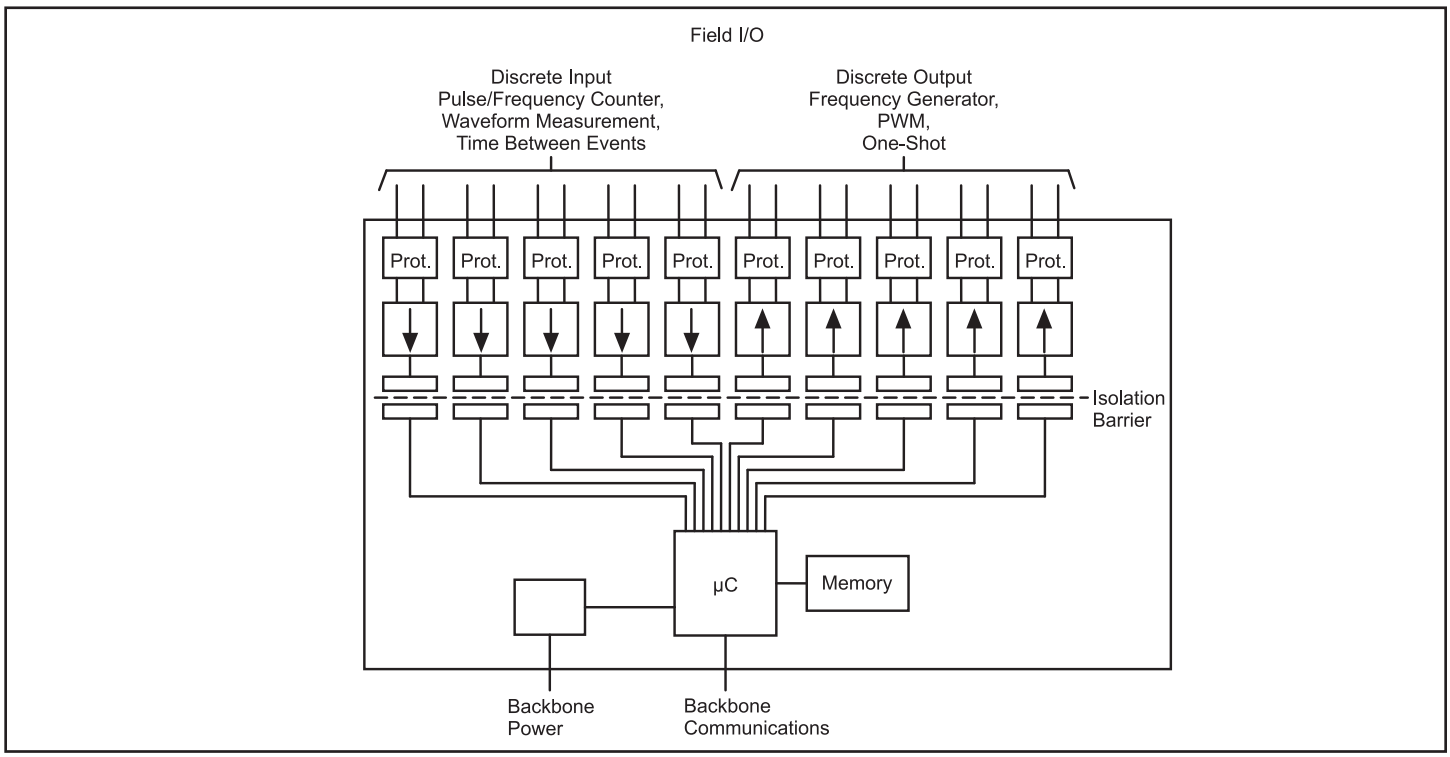

Figure 1: MAQ20-DIOL Discrete Input/Output Module Block Diagram

©1995-2017 Dataforth Corporation, All Rights Reserved ISO9001:2008-Registered QMS

Specifications

Typical* at T_A =+25°C and +24VDC system power

Module	Description
MAQ20-DIOL	5 Isolated Channel Discrete Input, 3-60VDC 5 Isolated Channel Discrete Output, 3-60VDC
MAQ20-DIOH	4 Isolated Channel Discrete Input, 90-280VAC/VDC 4 Isolated Channel Discrete Output, 24-280VAC
Per Channel Setup	Individually configurable for default output, special function
Input Protection	
Continuous, -DIOL	70VDC max, Reverse Polarity Protected
Continuous, -DIOH	350VAC/VDC max
Transient	ANSI/IEEE C37.90.1
Output Protection	
Continuous, -DIOL	70VDC max, Reverse Polarity Protected
Continuous, -DIOH	350VAC/VDC max
Transient	ANSI/IEEE C37.90.1
CMV	
Channel-to-Bus	1500Vrms, 1 min
Channel-to-Channel	300Vrms, 425VDC
Transient	ANSI/IEEE C37.90.1
Output Load (Combined load, all channels)(1)	
MAQ20-DIOL	
Ta=25°C, Freq=0 to 1500Hz, Duty Cycle=5-100%	3A (2A if adjacent module Tcase>50°C)
Ta=85°C, Freq=0 to 500Hz, Duty Cycle=5-100%	2A (1A if adjacent module Tcase>50°C)
MAQ20-DIOH	
Ta=25°C, Freq=0 to 1500Hz	3Arms
Ta=85°C, Freq=0 to 500Hz	3Arms
Switching Characteristics	
MAQ20-DIOL	
Input Channel Turn-On/ Turn-Off Time	25µs / 55µs
Output Channel Turn-On/ Turn-Off Time	20µs / 40µs
MAQ20-DIOH	
Input Channel Turn-On/ Turn-Off Time	20ms / 30ms (VAC), 1ms / 1ms (VDC)
Output Channel Response Time	0.5 Cycle
I/O Special Functions (MAQ20-DIOL)	
Pulse/Frequency Counter**	Freq to 10kHz, Count to 10M**, RPM to 65k
Pulse/Frequency Counter w/De-bounce	Freq to 3kHz, Count to 10M
Waveform Measurement	Freq to 500Hz, # Periods, Pulse Width, Period, Duty Cycle
Time Between Events**	Min**, Max**, Avg**, Selectable Timebase**
Frequency Generator	Up to 700Hz
PWM Generator	200µs min Period, Selectable Timebase
One-Shot Pulse Generator	100µs min, Programmable Pre- and Post-Delay
Scan/Update Rate	3500 Ch/s
Alarms (MAQ20-DIOL)	High / High-High / Low / Low-Low
Power Supply Current	30mA
Dimensions (h)(w)(d)	4.51" x 0.60" x 3.26" (114.6mm x 15.3mm x 82.8mm)

Ordering Information

Model	Description
MAQ20-DIOL	Discrete Input/Output Module; 3 to 60VDC In, 3 to 60VDC Out, 5-ch In, 5-ch Out
MAQ20-DIOH	Discrete Input/Output Module; 90 to 280VAC/VDC In, 24 to 280VAC Out, 4-ch In, 4-ch Out

Terminal Block Position (top to bottom)	MAQ20-DIOL Field Connections	MAQ20-DIOH Field Connections
1	DO CH0 +OUT	DO CH0 +OUT
2	DO CH0 -OUT	DO CH0 -OUT
3	DO CH1 +OUT	DO CH1 +OUT
4	DO CH1 -OUT	DO CH1 -OUT
5	DO CH2 +OUT	DO CH2 +OUT
6	DO CH2 -OUT	DO CH2 -OUT
7	DO CH3 +OUT	DO CH3 +OUT
8	DO CH3 -OUT	DO CH3 -OUT
9	DO CH4 +OUT	NC
10	DO CH4 -OUT	NC
11	DI CH0 +IN	NC
12	DI CH0 -IN	NC
13	DI CH1 +IN	DI CH0 +IN
14	DI CH1 -IN	DI CH0 -IN
15	DI CH2 +IN	DI CH1 +IN
16	DI CH2 -IN	DI CH1 -IN
17	DI CH3 +IN	DI CH2 +IN
18	DI CH3 -IN	DI CH2 -IN
19	DI CH4 +IN	DI CH3 +IN
20	DI CH4 -IN	DI CH3 -IN

Specifications (continued)

Module	Description
Environmental	
Operating Temperature	–40°C to +85°C
Storage Temperature	–40°C to +85°C
Relative Humidity	0 to 95% Noncondensing
Emissions, EN61000-6-4	ISM Group 1
Radiated, Conducted	Class A
Immunity EN61000-6-2	ISM Group 1
RF	Performance A ±0.5% Span Error
ESD, EFT	Performance B
Certifications	Heavy Industrial CE Compliant UL/CUL Listing Pending (Class I, Division 2, Groups A, B, C, D) ATEX Compliance Pending

NOTES:
*Contact factory or your local Dataforth sales office for maximum values.
(1) See manual for detailed calculations of load ratings based on ambient temperature, multiple channels, and adjacent modules. **Also applicable to MAQ20-DIOH

For input and output connections and full details on module operation, refer to MA1043 – MAQ20 Discrete Input-Output Module Hardware User Manual, available for download at: www.dataforth.com/maq20_download.aspx.

©1995-2017 Dataforth Corporation, All Rights Reserved ISO9001:2008-Registered QMS

Discrete Input Modules: High Density Voltage

20 Input Channels with or without Compliance Voltage

Description

The MAQ20-DIV20/-DIVC20 modules have 20 discrete input channels that interface to 10-32VDC signals. The MAQ20-DIVC20 model has a +24VDC compliance voltage source on each channel for interfacing to relay contacts, solid state switches, or other devices that require an excitation. Discrete input states can be read individually or as a block. Logic polarity can be user defined as standard or inverted. The field inputs are designed for harsh industrial environments and have fast switching times. Pulses as narrow as 200µs can be measured. Field input connections are made through high density spring cage terminal blocks.

Input-to-bus isolation is a robust 1500Vrms and each individual channel is protected up to 150Vrms continuous overload in case of inadvertent wiring errors.

The high channel count within the narrow module package gives exceptional functionality while preserving valuable mounting space. The high density minimizes cost per channel resulting in economical monitoring solutions.

All MAQ20 modules are designed for installation in Class I, Division 2 hazardous locations and have a high level of immunity to environmental noise commonly present in heavy industrial environments.

Features

- 20 Discrete Input Channels
- Interface to 10-32VDC Signals
- +24VDC Compliance Voltage for Interface to Relay Contacts, Solid State Switches & Other Devices Requiring Excitation (MAQ20-DIVC20)
- 1500Vrms Input-to-Bus Isolation
- Each Channel Protected up to 150Vrms Continuous Overload
- User Defined Logic Polarity
- Fast Switching Times
- Field Input Connections Use Spring Cage Terminal Blocks
- Most Affordable Price per Channel

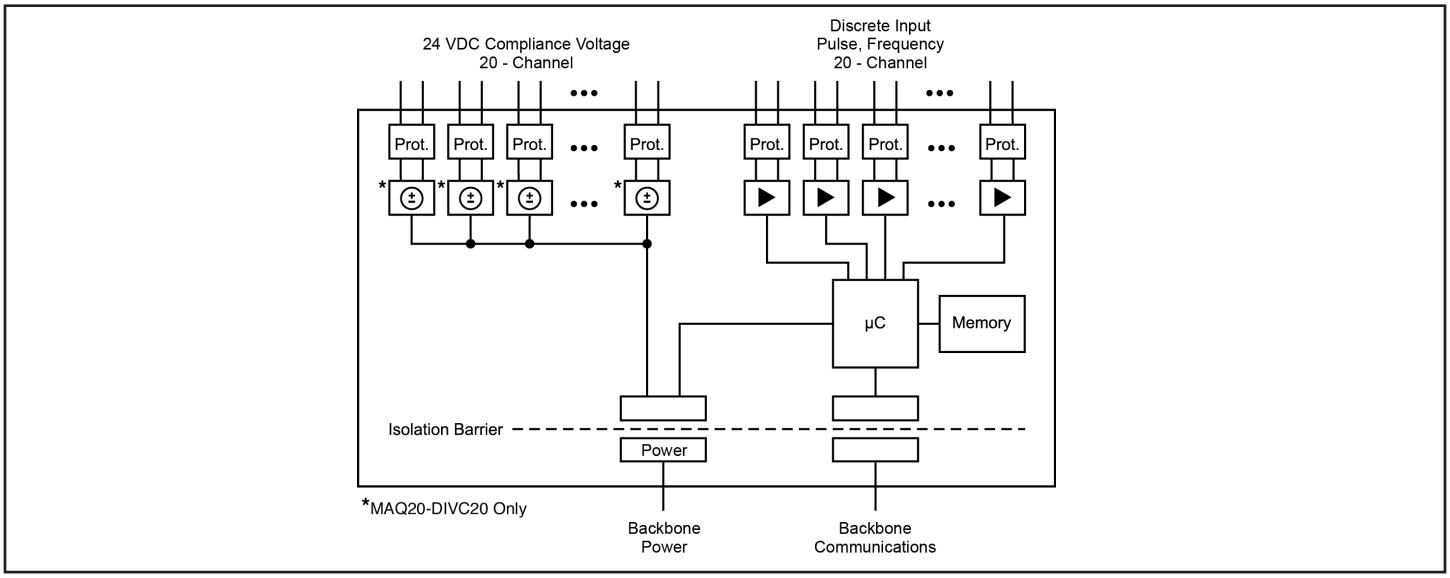

Figure 1: MAQ20-DIV20/-DIVC20 Discrete Input Voltage Modules Block Diagram

©1995-2017 Dataforth Corporation, All Rights Reserved ISO9001:2008-Registered QMS

Specifications

Typical* at T_A =+25°C and +24VDC system power

Module	Description
MAQ20-DIV20 MAQ20-DIVC20	10 to 32VDC Input, 24VDC Nominal 10 to 24VDC Input, 24VDC Compliance Voltage per channel
Number of Channels Input Resistance	20 77kΩ
Switching Characteristics Turn-On/Turn-Off Time Switching Threshold, Turn-On/Turn-Off	 50µs / 50µs 9.0V / 5.5V
Input Protection Continuous Transient CMV Channel-to-Bus Channel-to-Channel Transient	 150Vrms max ANSI/IEEE C37.90.1 1500Vrms, 1 min 0V ANSI/IEEE C37.90.1
Input Functions Logic Selection Block Read	 Standard / Inverted 20 Channel
Scan/Update Rate Power Supply Current	1300 Ch/s net, 65 Ch/s at 20-Ch Simultaneous 50mA
Dimensions (h)(w)(d)	3.27" x 4.51" x 0.60" (83.1mm x 114.6mm x 15.3mm)
Environmental Operating Temperature Storage Temperature Relative Humidity Emissions, EN61000-6-4 Radiated, Conducted Immunity EN61000-6-2 RF ESD, EFT	 -40°C to +85°C -40°C to +85°C 0 to 95% Noncondensing ISM Group 1 Class A ISM Group 1 Performance A Performance B
Certifications	Heavy Industrial CE Compliant ATEX Compliance Pending UL/CUL Listing Pending (Class I, Division 2, Groups A, B, C, D)

NOTES:
*Contact factory or your local Dataforth sales office for maximum values.

Ordering Information

Model	Description
MAQ20-DIV20	Analog Input Module; Discrete Input Voltage, 20-ch
MAQ20-DIVC20	Analog Input Module; Discrete Input +24VDC Compliance Voltage, 20-ch

Field Connection (MAQ20-DIV20/ -DIVC20)	Terminal	Terminal	Field Connection (MAQ20-DIV20)	Field Connection (MAQ20-DIVC20)
CH0 +IN	1	2	CH0 -IN	CH0 VC*
CH1 +IN	3	4	CH1 -IN	CH1 VC*
CH2 +IN	5	6	CH2 -IN	CH2 VC*
CH3 +IN	7	8	CH3 -IN	CH3 VC*
CH4 +IN	9	10	CH4 -IN	CH4 VC*
CH5 +IN	11	12	CH5 -IN	CH5 VC*
CH6 +IN	13	14	CH6 -IN	CH6 VC*
CH7 +IN	15	16	CH7 -IN	CH7 VC*
CH8 +IN	17	18	CH8 -IN	CH8 VC*
CH9 +IN	19	20	CH9 -IN	CH9 VC*
CH10 +IN	21	22	CH10 -IN	CH10 VC*
CH11 +IN	23	24	CH11 -IN	CH11 VC*
CH12 +IN	25	26	CH12 -IN	CH12 VC*
CH13 +IN	27	28	CH13 -IN	CH13 VC*
CH14 +IN	29	30	CH14 -IN	CH14 VC*
CH15 +IN	31	32	CH15 -IN	CH15 VC*
CH16 +IN	33	34	CH16 -IN	CH16 VC*
CH17 +IN	35	36	CH17 -IN	CH17 VC*
CH18 +IN	37	38	CH18 -IN	CH18 VC*
CH19 +IN	39	40	CH19 -IN	CH19 VC*

NOTES: *VC = Vcompliance

For input connections and full details on module operation, refer to MA1059 – MAQ20-DIV20/-DIVC20 Discrete Input Module Hardware User Manual, available for download at: www.dataforth.com/maq20_download.aspx

©1995-2017 Dataforth Corporation, All Rights Reserved ISO9001:2008-Registered QMS

Discrete Output Module: High Density Isolated

20 Output Channels with User Configurable Default Output States

Description

The MAQ20-DODC20SK module has 20 isolated discrete output channels that can switch up to 60VDC signals and sink up to 3A of current. Channels can be switched individually or in block format. User configurable default output states which are set upon power up or module reset ensure fail-safe operation for critical applications. Logic polarity can be user defined as standard or inverted. The isolated field outputs are designed for harsh industrial environments and have fast switching times. Field output connections are made through high density spring cage terminal blocks.

Output-to-bus isolation is a robust 1500Vrms and each individual channel is protected up to 60VDC continuous overload in case of inadvertent wiring errors. 150Vrms channel-to-channel isolation gives the module the ability to control equipment with or without common signal grounds or different pieces of equipment with multiple reference potentials.

The high channel count within the narrow module package gives exceptional functionality while preserving valuable mounting space. The high density minimizes cost per channel resulting in economical control solutions.

All MAQ20 modules are designed for installation in Class I, Division 2 hazardous locations and have a high level of immunity to environmental noise commonly present in heavy industrial environments.

Features

- 20 Isolated Discrete Output Channels with User Configurable Default Output States
- Channels Switch up to 60VDC Signals and Sink up to 3A Current
- Channels Switched Individually or in Blocks
- 1500Vrms Output-to-Bus Isolation
- 150Vrms Channel-to-Channel Isolation
- Each Channel Protected up to 60VDC Continuous Overload
- User Defined Logic Polarity
- Fast Switching Times
- Field Output Connections Use Spring Cage Terminal Blocks
- Most Affordable Price per Channel

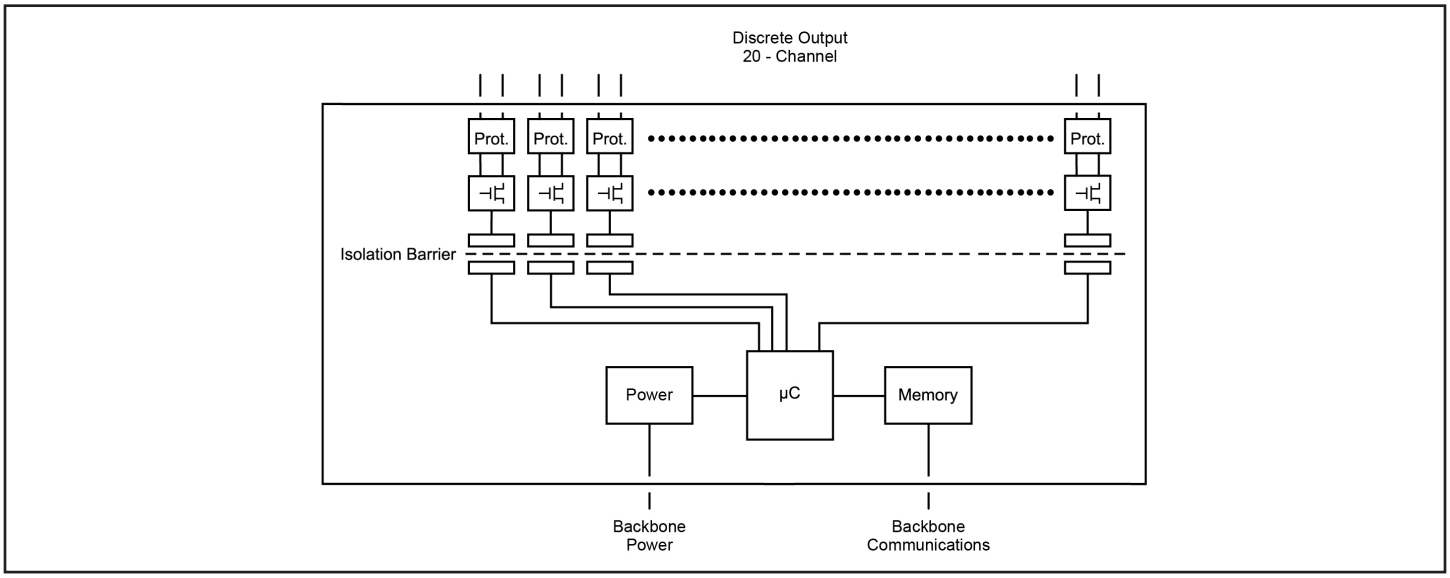

Figure 1: MAQ20-DODC20SK Discrete Output Voltage Module Block Diagram

©1995-2017 Dataforth Corporation, All Rights Reserved ISO9001:2008-Registered QMS

Specifications

Typical* at T_A =+25°C and +24VDC system power

Module	Description
MAQ20-DODC20SK	10 to 60VDC Output at 3A max per channel
Number of Channels Output Configuration	20 Open Drain MOSFET
Switching Characteristics Turn-On/Turn-Off Time Output Load (Combined load, all channels) Ta = 25ºC Ta = 85ºC	 1ms / 1ms 30A 10A
Output Protection Continuous Transient CMV Channel-to-Bus Channel-to-Channel Transient	 60VDC max ANSI/IEEE C37.90.1 1500Vrms, 1 min 150Vrms, 212V peak ANSI/IEEE C37.90.1
Output Functions Logic Selection Block Write Default Relay State on Power Up/Reset	 Standard / Inverted 20 Channel User Configurable
Update Rate Power Supply Current	1300 Ch/s net, 65 Ch/s at 20-Ch Simultaneous 30mA
Dimensions (h)(w)(d)	3.27" x 4.51" x 0.60" (83.1mm x 114.6mm x 15.3mm)
Environmental Operating Temperature Storage Temperature Relative Humidity Emissions, EN61000-6-4 Radiated, Conducted Immunity EN61000-6-2 RF ESD, EFT	 -40°C to +85°C -40°C to +85°C 0 to 95% Noncondensing ISM Group 1 Class A ISM Group 1 Performance A Performance B
Certifications	Heavy Industrial CE Compliant ATEX Compliance Pending UL/CUL Listing Pending (Class I, Division 2, Groups A, B, C, D)

NOTES:
*Contact factory or your local Dataforth sales office for maximum values.

Ordering Information

Model	Description
MAQ20-DODC20SK	Discrete Output Module; Up to 60VDC Signals, 3A Current, 20-ch

Field Connection (MAQ20-DODC20SK)	Terminal	Terminal	Field Connection (MAQ20-DODC20SK)
CH0 +OUT	1	2	CH0 -OUT
CH1 +OUT	3	4	CH1 -OUT
CH2 +OUT	5	6	CH2 -OUT
CH3 +OUT	7	8	CH3 -OUT
CH4 +OUT	9	10	CH4 -OUT
CH5 +OUT	11	12	CH5 -OUT
CH6 +OUT	13	14	CH6 -OUT
CH7 +OUT	15	16	CH7 -OUT
CH8 +OUT	17	18	CH8 -OUT
CH9 +OUT	19	20	CH9 -OUT
CH10 +OUT	21	22	CH10 -OUT
CH11 +OUT	23	24	CH11 -OUT
CH12 +OUT	25	26	CH12 -OUT
CH13 +OUT	27	28	CH13 -OUT
CH14 +OUT	29	30	CH14 -OUT
CH15 +OUT	31	32	CH15 -OUT
CH16 +OUT	33	34	CH16 -OUT
CH17 +OUT	35	36	CH17 -OUT
CH18 +OUT	37	38	CH18 -OUT
CH19 +OUT	39	40	CH19 -OUT

For input connections and full details on module operation, refer to MA1061 – MAQ20-DODC20SK Discrete Output Module Hardware User Manual, available for download at: www.dataforth.com/maq20_download.aspx

©1995-2017 Dataforth Corporation, All Rights Reserved ISO9001:2008-Registered QMS

Discrete Output Module: Relay◈

Isolated SPST Latching Relay Output Channels

Description

The MAQ20-DORLY20 module has 20 isolated SPST latching relay output channels that can switch between 2A at 30V and 0.4A at 150V. Each channel has contact state readback to verify the physical output state. Relays can be controlled individually or in blocks and have user configurable default output states which are set upon power up, power loss, and module reset to ensure fail-safe operation for critical applications. Relay state control can be user defined as standard or inverted logic. The isolated field outputs are designed for harsh industrial environments and have fast switching times. Advanced output functions SPDT, DPDT, 4x5 Crosspoint Matrix, 8-Channel Differential Multiplexer, 20:1 Multiplexer and Null Mode are configured with external field terminal block wiring and controlled by module commands. Field output connections are made through high density spring cage terminal blocks. Reserve power is stored and used for predictable shutdown to user-defined relay states upon loss of module power.

Output-to-bus isolation is a robust 1500Vrms and each individual channel is protected up to 150Vrms continuous overload in case of inadvertent wiring errors. 150Vrms channel-to-channel isolation gives the module the ability to control equipment with or without common signal grounds or different pieces of equipment with multiple reference potentials.

The high channel count within the narrow module package gives exceptional functionality while preserving valuable mounting space. The high density minimizes cost per channel resulting in economical control solutions.

All MAQ20 modules are designed for installation in Class I, Division 2 hazardous locations and have a high level of immunity to environmental noise commonly present in heavy industrial environments.

◈Preliminary at date of printing. Contact factory for availability.

Features

- 20 Isolated SPST Latching Relay Output Channels
- Channels Switch Between 2A at 30V and 0.4A at 150V
- Contact State Readback on Each Channel
- Relays Controlled Individually or in Blocks
- User Configurable Default States
- 1500Vrms Channel-to-Bus Isolation
- 150Vrms Channel-to-Channel Isolation
- Advanced Output Functions
- User Defined Logic Polarity
- Fast Switching Times
- Field Output Connections Use Spring Cage Terminal Blocks

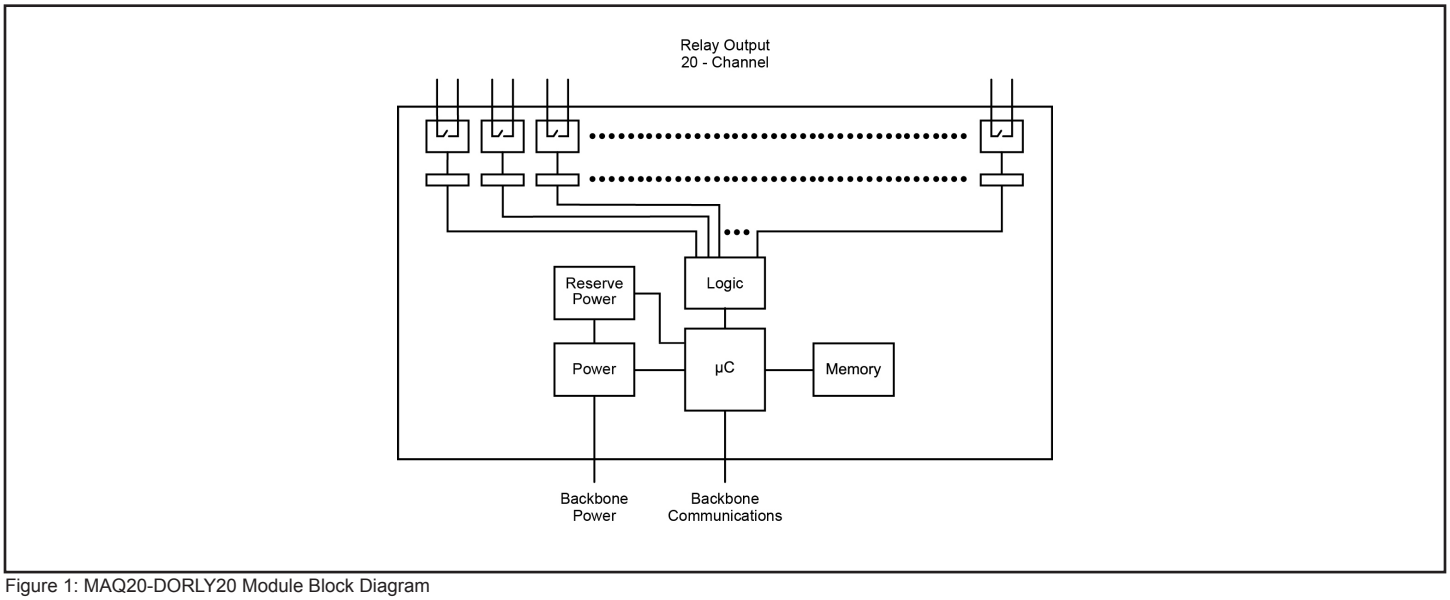

Figure 1: MAQ20-DORLY20 Module Block Diagram

©1995-2017 Dataforth Corporation, All Rights Reserved ISO9001:2008-Registered QMS

Specifications

Typical* at T_A =+25°C and +24VDC system power

Module	Description
MAQ20-DORLY20◇	60W per channel (2A at 30V to 0.4A at 150V)
Number of Channels Output Configuration	20 SPST Latching Relay with Contact State Readback
Switching Characteristics Turn-On/Turn-Off Time Output Load Ta = 25ºC Ta = 85ºC	 1ms / 1ms 60W per channel max (2A at 30V to 0.4A at 150V) 40W per channel max (1.3A at 30V to 0.27A at 150V)
Output Protection Continuous Transient CMV Channel-to-Bus Channel-to-Channel Transient	 ±150V peak max ANSI/IEEE C37.90.1 1500Vrms, 1 min 150Vrms, 212V peak ANSI/IEEE C37.90.1
Standard Output Functions Logic Selection Block Write Default Relay State on Power Up Default Relay State on Power Loss Default Relay State on Reset Advanced Output Functions Configure with External Wiring	 Standard / Inverted 20 Channel User Configurable User Configurable User Configurable SPDT, DPDT, 4x5 Crosspoint Matrix, 8-Channel Differential Multiplexer, 20:1 Multiplexer, Null Mode
Update Rate Power Supply Current	1300 Ch/s net, 65 Ch/s at 20-Ch Simultaneous 30mA
Dimensions (h)(w)(d)	3.27" x 4.51" x 0.60" (83.1mm x 114.6mm x 15.3mm)
Environmental Operating Temperature Storage Temperature Relative Humidity Emissions, EN61000-6-4 Radiated, Conducted Immunity EN61000-6-2 RF ESD, EFT	 -40°C to +85°C -40°C to +85°C 0 to 95% Noncondensing ISM Group 1 Class A ISM Group 1 Performance A ±0.5% Span Error Performance B
Certifications	Heavy Industrial CE Compliant ATEX Compliance Pending UL/CUL Listing Pending (Class I, Division 2, Groups A, B, C, D)

NOTES:
*Contact factory or your local Dataforth sales office for maximum values.
◇Preliminary at date of printing. Contact factory for availability.

Ordering Information

Model	Description
MAQ20-DORLY20◇	Discrete Output Module; Isolated SPST Latching Relay Channels

Field Connection	Terminal	Terminal	Field Connection
CH0 POLE	1	2	CH0 THROW
CH1 POLE	3	4	CH1 THROW
CH2 POLE	5	6	CH2 THROW
CH3 POLE	7	8	CH3 THROW
CH4 POLE	9	10	CH4 THROW
CH5 POLE	11	12	CH5 THROW
CH6 POLE	13	14	CH6 THROW
CH7 POLE	15	16	CH7 THROW
CH8 POLE	17	18	CH8 THROW
CH9 POLE	19	20	CH9 THROW
CH10 POLE	21	22	CH10 THROW
CH11 POLE	23	24	CH11 THROW
CH12 POLE	25	26	CH12 THROW
CH13 POLE	27	28	CH13 THROW
CH14 POLE	29	30	CH14 THROW
CH15 POLE	31	32	CH15 THROW
CH16 POLE	33	34	CH16 THROW
CH17 POLE	35	36	CH17 THROW
CH18 POLE	37	38	CH18 THROW
CH19 POLE	39	40	CH19 THROW

For input connections and full details on module operation, refer to MA1063 – MAQ20-DORLY20 Discrete Relay Output Module Hardware User Manual, available for download at: www.dataforth.com/maq20_download.aspx

©1995-2017 Dataforth Corporation, All Rights Reserved ISO9001:2008-Registered QMS

System Backbones

Distribute Power and Communications

Description

The MAQ20 system backbone resides within the DIN rail used for module mounting and provides power to and interface between the communications module and the I/O modules. Standard backbones provide for one communication module and 4, 8, 16, or 24 I/O modules. The longest backbone, which accommodates 24 I/O modules, fits in an industry standard 19" rack. Each backbone utilizes a pluggable connector system on each end such that varying system channel counts can be configured using the standard backbones. As a result of this pluggable system, the main part of a system, including the communications module, can be installed in one location while other sets of I/O modules installed in remote locations connect to the main system through a wire harness.

Modules mount on industry standard 35x7.5mm gull-wing DIN rails.

Once a system is established with a system backbone and a communications module, system configuration is accomplished by applying power and installing the I/O modules. These are hot swappable and true 'plug and run'. When an I/O module is plugged into any backbone position, the communications module automatically recognizes that it has been added to the system, registers it in the system configuration record, and makes it immediately available in the host software for use in data acquisition and control, and test and measurement applications. Similarly, when a module is removed from any backbone position, the communications module recognizes that it has been unplugged, removes it from the system configuration, and disables it in the software.

Features

- Compact Mounting in DIN Rail Channel
- Distribute Power and Communications
- 4, 8, 16, and 24 Position Models
- Simplify System Wiring
- Expandable for Local or Distributed Installation
- Prevent Reverse Installation
- Long-Life, Durable, Vibration Resistant Contacts
- Modules are Hot Swappable and True "Plug and Run"

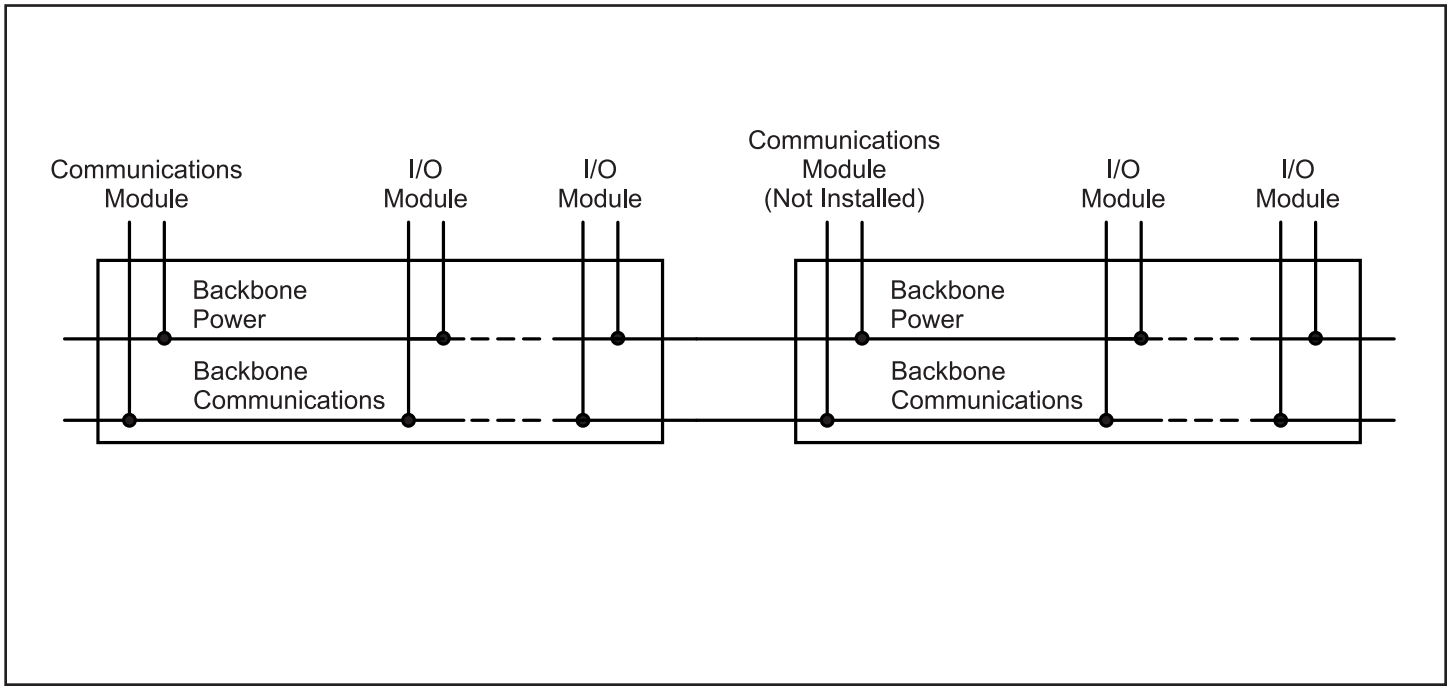

Figure 1: MAQ20 Backbone Block Diagram

©1995-2017 Dataforth Corporation, All Rights Reserved ISO9001:2008-Registered QMS

Specifications

Module	Description
MAQ20-BKPL4	DIN Rail Backbone, Accepting 1 COM Module plus 4 I/O Modules
MAQ20-BKPL8	DIN Rail Backbone, Accepting 1 COM Module plus 8 I/O Modules
MAQ20-BKPL16	DIN Rail Backbone, Accepting 1 COM Module plus 16 I/O Modules
MAQ20-BKPL24	DIN Rail Backbone, Accepting 1 COM Module plus 24 I/O Modules
Expansion & Distributed Installation	
Mechanical	Male/Female pluggable terminal blocks at each end of the backbone allow direct interconnection or remote installation using the accessory expansion cable.
Expansion Distance	100ft (30m) max
Mounting	
Physical	Spring clips hold the backbone in the DIN rail. When modules are installed, the backbone is secured to the DIN rail.
Reverse Protection	Mechanical interface prevents reverse module installation.
Electrical	
Circuitry	Passive
Inter-Module Communications	RS-485
Dimensions (h)(w)(d)	
MAQ20-BKPL4	5.05" x 0.94" (127.1mm x 3.9mm)
MAQ20-BKPL8	7.53" x 0.94" (191.1mm x 3.9mm)
MAQ20-BKPL16	12.63" x 0.94" (320.9mm x 3.9mm)
MAQ20-BKPL24	17.41" x 0.94" (442.1mm x 3.9mm)
Environmental	
Operating Temperature	–40°C to +85°C
Storage Temperature	–40°C to +85°C
Relative Humidity	0 to 95% Noncondensing
Certifications	Heavy Industrial CE Compliant UL/CUL Listing Pending (Class I, Division 2, Groups A, B, C, D) ATEX Compliance Pending

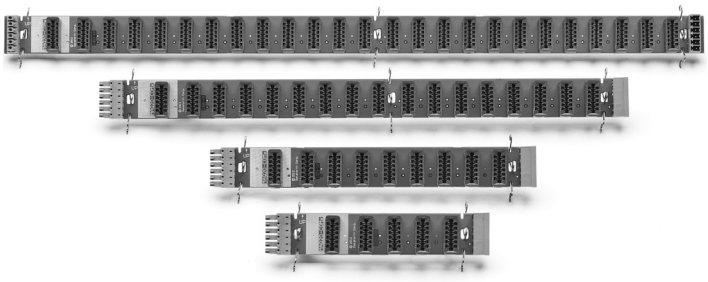

Figure 2: MAQ20 Backbones for 4, 8, 16, and 24 I/O Modules

Ordering Information

Model	Description
MAQ20-BKPL4	DIN Rail Backbone; Accepting 1 COM Module plus 4 I/O Modules
MAQ20-BKPL8	DIN Rail Backbone; Accepting 1 COM Module plus 8 I/O Modules
MAQ20-BKPL16	DIN Rail Backbone; Accepting 1 COM Module plus 16 I/O Modules
MAQ20-BKPL24	DIN Rail Backbone; Accepting 1 COM Module plus 24 I/O Modules

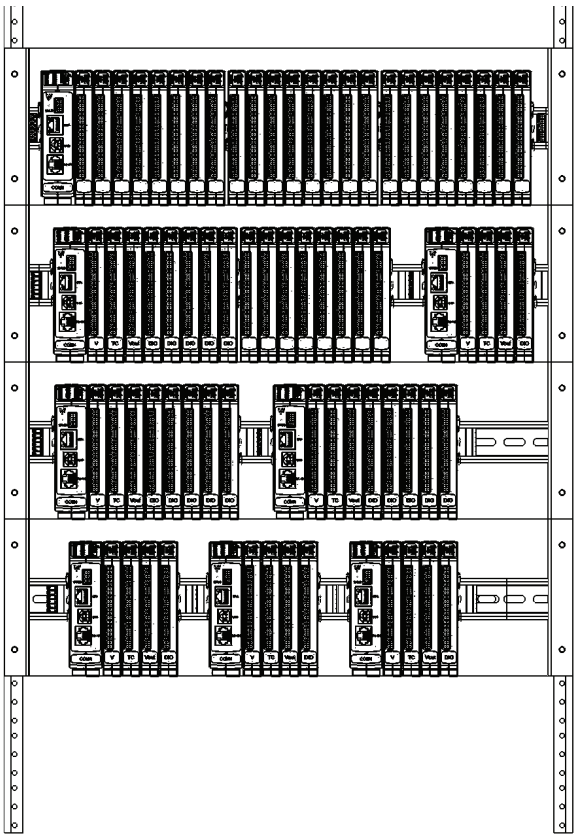

Figure 3: Flexible Backbone System Allows Configuration with Communications Module and 4, 8, 16, or 24 I/O Modules in 19" Rack Space

For connections and full details on system operation, refer to MA1040 – MAQ20 Communications Module Hardware User Manual, available for download at: www.dataforth.com/maq20_download.aspx.

©1995-2017 Dataforth Corporation, All Rights Reserved ISO9001:2008-Registered QMS

MAQ20-940/-941/-945

ReDAQ® Shape and Configuration Software for MAQ20

Description

Dataforth offers ReDAQ Shape software for MAQ20 as an easy and efficient development tool for use with the MAQ20 Industrial Data Acquisition and Control System. This software enables users to create, save, and open graphical user interface projects for test, process, data collection and data analysis applications. Built-in functions in the Acquire and Analyze panels are pre-configured and can be used as is. Just three easy steps are required to create data acquisition and control projects in the Presentation panel using 65 high quality tools and powerful MAQ20 functions.

ReDAQ Shape for MAQ20 is ideal for data acquisition, monitoring and control applications. It enables users to easily interact with the Dataforth PID loop controller, which an engineer or operator accesses through faceplates within the software.

The ReDAQ Shape software also provides an effective way to configure and customize MAQ20 functions for specific application requirements. The toolbox tools are easily moved, re-sized, cut, copied, pasted, and deleted. The main screen of ReDAQ Shape shows a representation of the system inclusive of the communications module and any installed I/O modules. This graphic is updated as I/O modules are added to or removed from the system. Modules can be given unique identifiers, and I/O module channels can be assigned tag names to represent process variables they control.

Based on programming tools incorporated from Microsoft Visual Studio® and National Instruments Measurement Studio®, ReDAQ Shape software for MAQ20 has a very short user-learning curve and offers integrated, across-the-board applicability for data acquisition and control applications. It requires only a one-time low-cost license fee.

Link to ReDAQ software at www.dataforth.com/maq20_download.aspx

Features

- 3 Easy Steps to Create Customized Applications
- No Setup or Configuration Required to Acquire and Analyze Data
- Faceplates for PID Loop Control
- 65 Toolbox Tools Simplify Project Creation
- Supports Any Graphical File Format
- Integrated, Across-the-Board Applicability
- Most Efficient Way to Configure and Run MAQ20 Systems
  - Continuous acquisition and burst scan modes
  - Automatically scales data from counts to engineering units
  - Discrete I/O offers 7 special functions: Pulse/Frequency Counter, Pulse/Frequency Counter with De-bounce, Waveform Measurement, Time Between Events, Frequency Generator, PWM Generator, One-Shot Pulse Generator
  - Assign tag names for any input and output
  - Configure control loops and alarm outputs
  - Three function timer (count-down, 24hr/day, day/time) with 10 programmable events

Configure

Display

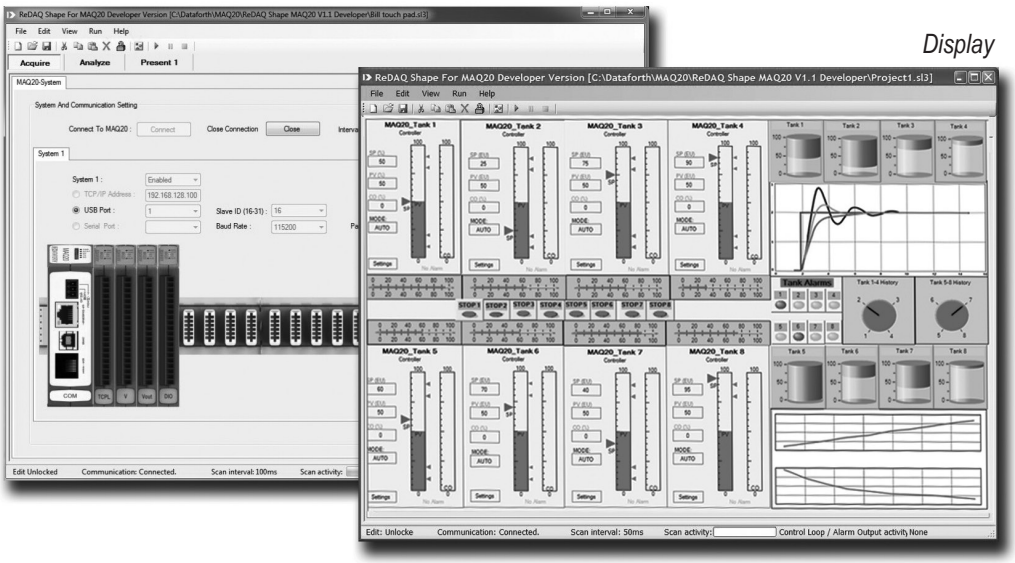

Figure 1: ReDAQ Shape Software Screen Shots

©1995-2017 Dataforth Corporation, All Rights Reserved ISO9001:2008-Registered QMS

PID Control Using MAQ20-COMx Modules and ReDAQ® Shape for MAQ20 Software

Description

The powerful Dataforth MAQ20 communications module is capable of autonomously running up to 32 PID control loops; faceplates within ReDAQ Shape software enable an engineer or operator to configure the many features of loop control and monitor processes.

With proportional and derivative modes that can act on error or a process variable, the controller can eliminate process bumps from set point changes. Gap control provides improved loop stability near the set point while retaining high response speed. The ability to change tuning settings without disturbing the process when the controller is in automatic mode and the option to track the set points of process variables during manual operation are both key features that enable smooth operation in both manual and automatic modes.

To ensure sensitive equipment is well protected, the controller's output range can be limited. The anti-reset windup feature both minimizes overshoot and improves stability after output saturation conditions.

The integrated Auto-Tuner simplifies the complex task of control loop tuning with separate methods for integrating and self-regulating loops.

Typical PID Control Applications

- Steam, water, and chemical flow control
- Tank level control
- Heat-exchanger / reactor temperature control
- Pressure control

Many types of processes in a wide variety of applications can be managed using the Dataforth PID controller in the MAQ20 system. Its high level of performance and broad range of features are paralleled only by much larger state-of-the-art distributed control systems.

Features

- Separate Panels for Setting Basic, Advanced, and Alarm Items
- Noninteracting and Parallel PID Control Algorithms
- Up to 32 Loops of PID Control
- Controller Runs in Real Time
- Controller Accessed through Faceplates
- Proportional and Derivative Modes can Act on Error or Process Variable
- Gap Control
- Built-in Process Variable Filtering
- Bumpless Manual to Automatic Control Mode Transfer
- Change Tuning Settings Easily in Automatic Mode
- Optional Process Variable Set Point Tracking in Manual Mode
- Limit Controller Output Range
- Anti-Reset Windup
- Four Process Alarms
- Full-Featured Faceplate for Numeric and Visual Feedback
- Integrated Auto-Tuner

Ordering Information

Model	Description
MAQ20-940	ReDAQ Shape Software for MAQ20 Developer Version
MAQ20-941	ReDAQ Shape Software for MAQ20 User Version
MAQ20-945	MAQ20 Configuration Software Tool

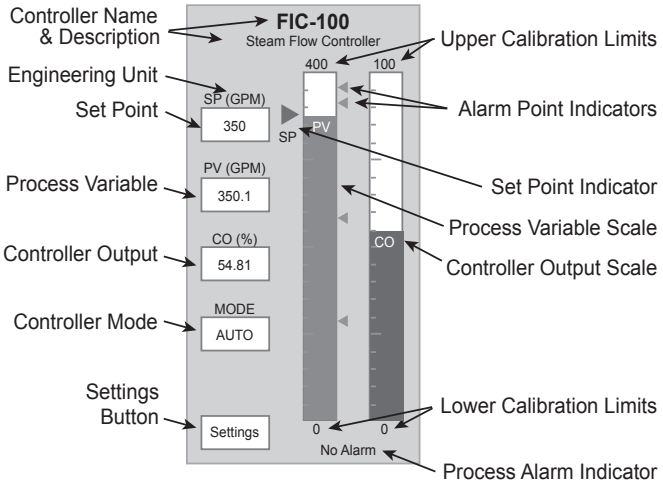

Figure 2: PID Faceplate in ReDAQ Shape Software

©1995-2017 Dataforth Corporation, All Rights Reserved ISO9001:2008-Registered QMS

MAQ20-951/-952

IPEmotion Software for MAQ20

Description

Representing the next step in test and measurement, IPEmotion is a very advanced, intuitive, versatile, and high performance data acquisition / test and measurement software designed specifically for industrial and R&D applications. Now available with an interface to the MAQ20, this powerful new generation software provides synchronized data acquisition and is easily adaptable to all customer specific requirements.

These requirements can include device configuration, data acquisition measurement, visualization, and analysis; to meet them, IPEmotion provides automatic recognition of connected devices, automatic configuration of all channels, automatic start of measuring, and instant visualization of all measurement values.

MAQ20 and IPEmotion measurements include temperature, current and voltage, strain, pressure, frequencies and rotational speeds, and logging and diagnostic data.

To enhance ease of use and increase productivity, the versatile IPEmotion software is available in seven languages: English, German, French, Italian, Chinese (traditional and simplified), Korean, and Japanese.

PID loop control is an integral part of IPEmotion. It runs in Windows and an unlimited number of loops are possible; the only limiting factor is the processing power of the PC.

IPEmotion communicates with the MAQ20 via a Plug-In driver. The software enables many functions to be integrated by linking external .dll and Visual Basic Script (.VBS) files to the application. Scripting is a powerful tool which enables users to automate the measurement process and to change menus, settings, analyzing procedures, and other aspects of the software.

Well designed for long-term measurements, IPEmotion allows measurement analysis and verification during data acquisition. Storage can be on a local hard drive or a remote drive, including a mapped Internet or network drive.

Features

- Live Data Display, Recording, Online and Offline Math and Logic Functions
- One-Click Acquisition
  - Direct hardware detection, data display and recording
- Live Adjustment
  - Analyze and verify measurements during active data acquisition
  - GUI adaptation during active measurement and storage
- Data Analysis
- PID Loop Control
- Post Processing and Report Generation
- Easy Drag and Drop HMI Creation
- High Speed Recording to 1000 Samples/s
- Plug-In Synchronization
- Import and Export Recorded Data Using Standard File Formats
- Scripting Option with VB or Python Software
- Configurable Gauges for Wide Ranging Applications
- Multilingual

Control *Recording*



Figure 1: IPEmotion Software Screen Shots

©1995-2017 Dataforth Corporation, All Rights Reserved ISO9001:2008-Registered QMS

PID Control Using IPEmotion Software with MAQ20 Plug-In

Description

PID loop control is extensive and highly functional in the IPEmotion software. An unlimited number of loops can be run; the only limiting factor is the processing power of the PC.

A maximum calculation cycle time update rate of 1kHz allows the software to control processes with fast reacting elements.

Typical PID Applications

- Steam, water, and chemical flow control
- Tank level control
- Heat-exchanger / reactor temperature control
- Pressure control

Ordering Information

Model	Description
MAQ20-951	IPEmotion Software for MAQ20 (1 COM module and 1 to 4 I/O modules)
MAQ20-952	IPEmotion Software for MAQ20 (Each additional 4 I/O modules)

Features

- Control Module Includes PID, State Machine, Function Generator, Math Functions
- Unlimited PID Control Loops Possible
- PID Controller Runs in Windows
- Start, Stop, Hold Trigger for All Control Functions
- Designed for Test Sequencing and Test Bench Control Operations
- 1kHz Maximum Calculation Cycle Time Update Rate
- Easily Configured Test Sequences using VB or Python Scripts
- Configure with Point and Click Functions on IPEmotion GUI
- Software Usable as Virtual PLC

©1995-2017 Dataforth Corporation, All Rights Reserved ISO9001:2008-Registered QMS

Accessories

Expansion Cables and Load Share Power Supply Module

Description

Accessories for the MAQ20 Industrial Data Acquisition and Control System include backbone expansion cables and a load share power supply module for systems that have power supply requirements greater than those the communications module provides.

Also available are cables to interface 8B backpanels to the MAQ20-VSN module, and USB and Ethernet cables and adapters.

A MAQ20 Demonstration Suitcase with process simulator is offered to sales channels.

The five PWR-PS5RxW power supplies used by the MAQ20 are the same as those used by DSCA signal conditioners.

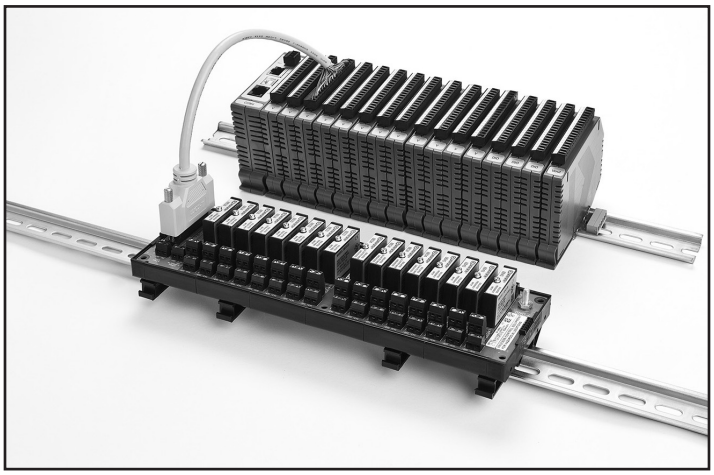

Figure 1: Cable Interfacing 8B Backpanel to MAQ20-VSN Module

Ordering Information

Backbone Expansion Cables

Model	Description
MAQ20-XCA-01	Backbone Expansion Cable; 1 meter (39.4")
MAQ20-XCA-02	Backbone Expansion Cable; 2 meter (78.7")

Load Share Power Supply Module

Model	Description
MAQ20-PWR3	Load Share Power Supply Module

Cables to Interface 8B Backpanels to MAQ20-VSN Module

Model	Description
MAQ20-8B25-0.3	DB25-to-20 pos screw term Transition Cable, 0.3m (11.8") long
MAQ20-8B25-0.6	DB25-to-20 pos screw term Transition Cable, 0.6m (23.6") long
MAQ20-8B25-01	DB25-to-20 pos screw term Transition Cable, 1.0m (39.4") long

USB and Ethernet Cables and Adapters

Model	Description
SLX147-01, -02, -05	USB Cable, Type A to Type B; 1m (39.4"), 2m (78.7"), 5m (196.9")
SLX141-01, -02, -07	Ethernet Cable, 1m (39.4"), 2m (78.7"), 7m (275.6")
SLX141-X01, -X02, -X07	Ethernet Crossover Cable, 1m (39.4"), 2m (78.7"), 7m (275.6")
SLX146-02, -07	Null Modem Serial Cable, Female DB-9 to Female DB-9; 2m (78.7"), 7m (275.6")
SLX142, 143	RJ45 to DB9 Adapters
SLX144	RJ45 RS-485 Multidrop Adapter

MAQ20 Demonstration Suitcase

Model	Description
MAQ20DEMO-B	MAQ20 Demonstration Suitcase with Process Simulator for Sales Channels

PWR-PS5RxW Power Supplies

Model	PWR-PS5R7W	PWR-PS5R15W	PWR-PS5R30W	PWR-PS5R60W	PWR-PS5R120W
Input	100 to 240VAC nominal; 85 to 264VAC, 100 to 370VDC compatible				
Output Voltage & Current Ratings	24V, 0.3A	24V, 0.65A	24V, 1.3A	24V, 2.5A	24V, 5.0A
Power	7.5W	15W	30W	60W	120W
Dimensions (h)(w)(d)	2.95" x1.77" x 2.76") (75mm x 45mm x 70mm)	3.54" x 0.89" x 3.74" (90mm x 22.5mm x 95mm)	3.54" x 0.89" x 3.74" (90mm x 22.5mm x 95mm)	3.74" x 1.42" x 4.25" (95mm x 36mm x 108mm)	4.53" x 1.81" x 4.76" (115mm x 46mm x 121mm)

NOTE:
For complete PWR-PS5RxW Power Supplies specifications, see page 232 in 2017 Full-Line Catalog.

©1995-2017 Dataforth Corporation, All Rights Reserved ISO9001:2008-Registered QMS

8B isoLynx®

SLX300 Data Acquisition System

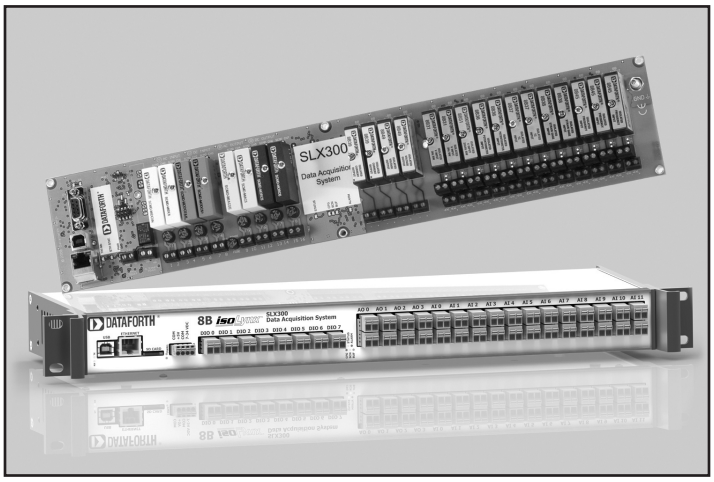

Features

- Modbus® RTU and TCP Support
- 1500Vrms Input-to-Output & Channel-to-Channel Isolation
- 240Vrms Field-side Protection
- Wide I/O Selection:
  Analog - 20 Families, 89 Models
  Digital - 5 Families, 14 Models
- Mix and Match Analog & Digital I/O
- Advanced Features Including Alarms, Counters, Timers, PWMs, and More
- –40°C to +85°C Operating Temperature
- Free Configuration Software
- C-UL-US Listed
  (Class I, Division 2, Groups A, B, C, D)
- CE Compliant
- ATEX Compliance Pending
- Manufactured per RoHS II Directive 2011/65/EU

Description

Dataforth's 8B isoLynx® SLX300 data acquisition system builds on the proven reliability and outstanding performance of the SCM5B isoLynx® SLX200 DAQ system and miniature-sized SensorLex® 8B isolated signal conditioning modules to provide a compact, low cost solution for wide ranging, rugged industrial applications. Like the SLX200, the SLX300 ensures superior reliability, accuracy, and isolation. Through the use of pluggable modules, the SLX300 offers maximum flexibility of analog and digital channel configuration for factory automation, process control, test and measurement, machine control, and data acquisition applications. The isoLynx SLX300 uses industry standard Modbus® RTU and TCP protocols, thus enabling communication with a wide range of existing third-party software tools and HMI/SCADA packages.

Fast I/O Channel-to-Channel Isolated

Using Dataforth's SensorLex 8B analog modules and SCMD digital modules, the flexible, modular SLX300 design can be configured with up to twelve channels of isolated analog input, four channels of isolated analog output, and eight channels of isolated digital I/O (Figure 3). The isolation rating is 1500Vrms from input to output and from channel to channel. The system can be powered by +5VDC or a wide range 7 to 34VDC using the 8BPWR-2 module, and it can be either panel or DIN rail mounted. Multiple powerful, highspeed microcontrollers and high performance data converters at the heart of the system enable mix and match analog and digital I/O at sustained rates of up to 3.0kS/s. In addition, a burst mode of operation is provided for analog input that allows sampling up to 100kS/s on analog input channels.

Industry's Widest I/O Selection

The isoLynx SLX300 can be configured for any application by selecting from over 89 analog I/O modules and 14 digital I/O modules. These module selections enable monitoring of common industrial signals including millivolt, volt, milliamp, amp, linearized and non-linearized thermocouple, 3- and 4-wire RTD, potentiometer, slidewire, strain gage, AC-to-True RMS output, frequency, 2-wire transmitter, and DC LVDT. Analog output modules provide isolated high-level voltage and current options. Industry standard digital I/O solid-state relay modules provide AC/DC input and output monitoring and control. Both analog and digital output channels can be configured as alarm outputs. The ability to mix and match module types on a per-channel basis ensures maximum system flexibility. Operation and storage temperature for the isoLynx SLX300, as well as for all analog and digital I/O modules used in the most extreme environments, is –40ºC to +85ºC; the relative humidity range is 0 to 95% noncondensing. The SLX300 system is C-UL-US Listed, CE Compliant, and designed for operation in Class I, Division 2 Hazardous Locations.

Powerful Functionality

The SLX300 has many features and special purpose functions specifically for data acquisition and control. Current sampled data from analog input channels is stored to a 192k sample buffer. Data is available as minimum, maximum, and average readings with selectable averaging weight. A burst mode of operation allows up to 100kS/s sampling rate on analog input channels and also provides a waveform generator function using the analog output channels. Continuous scan mode scans up to 16 input channels, and burst sampling mode can be set up with a 48 entry scan list to specify scan sequence, scan rate, and scan count. In addition to performing standard digital I/O, the eight digital I/O channels can be configured to perform seven different special functions: pulse/frequency counter, pulse/frequency counter with de-bounce, waveform measurement, time between events, frequency generator, pulse width modulation (PWM) generator, and one-shot generator. The SLX300 also allows four alarm states – high, high-high, low, and low-low – to be set on the analog input and digital I/O special function channels with alarm output mapped to a user selectable analog or digital output channel.

Configurable analog and digital default output values ensure output signals are set to safe values upon system startup or when unexpected power outages or brownouts occur. System status and mode LEDs constantly display communication activity, mode of operation, and alarm status.

©1995-2017 Dataforth Corporation, All Rights Reserved ISO9001:2008-Registered QMS

Flexible Communications and Configuration

The isoLynx SLX300 interfaces to a host system through a choice of communication links. RS-232 or RS-485 serial links operate from 2.4kbps to 921.6kbps, use true fail-safe transceivers, and have software controlled termination networks, eliminating the need for dip switches. A USB Virtual Communications Port provides a common connection to modern computers and a 10/100 Base-T Ethernet connection is also available. Up to 32 systems can be multi-dropped on the RS-485 serial link and up to 4 sockets are supported on Ethernet.

The Modbus® RTU protocol used on serial and USB interfaces and the Modbus TCP protocol used on the Ethernet interface are open, industry standard protocols that define how devices on a network communicate with each other. This ensures that the system can be integrated seamlessly onto existing Modbus networks using common Modbus function codes.

Free configuration software is provided for quick and easy system setup (see Figure 1 and Figure 2). Channel I/O setup, communication, default output, and other parameters are stored in non-volatile memory. A LabVIEW™ VI library enables fast application development using industry standard tools. The SLX300 system can be either panel or DIN rail mounted. It is also available in a rack-mounted or bench top 1U enclosure.

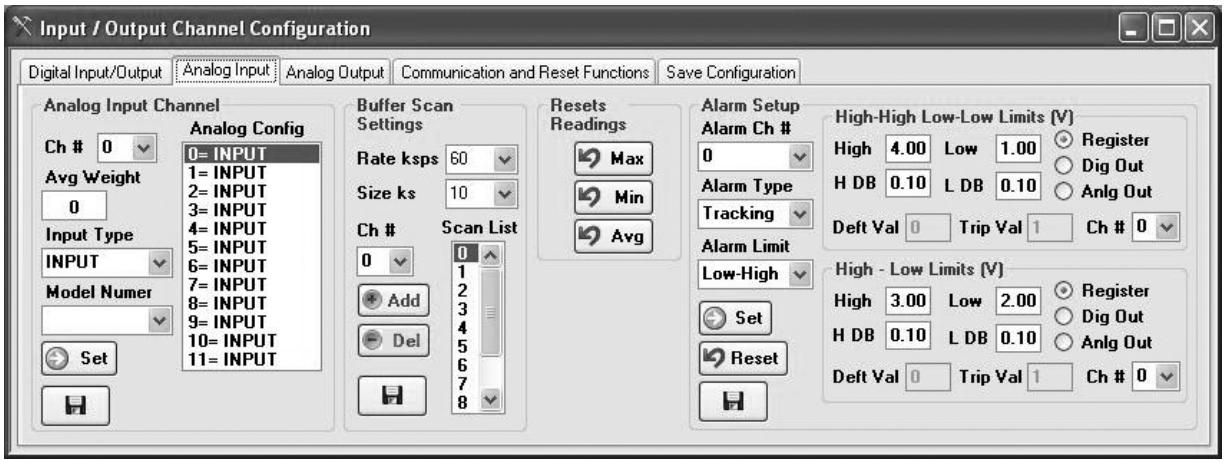

Figure 1: Configuration Tool - System Setup

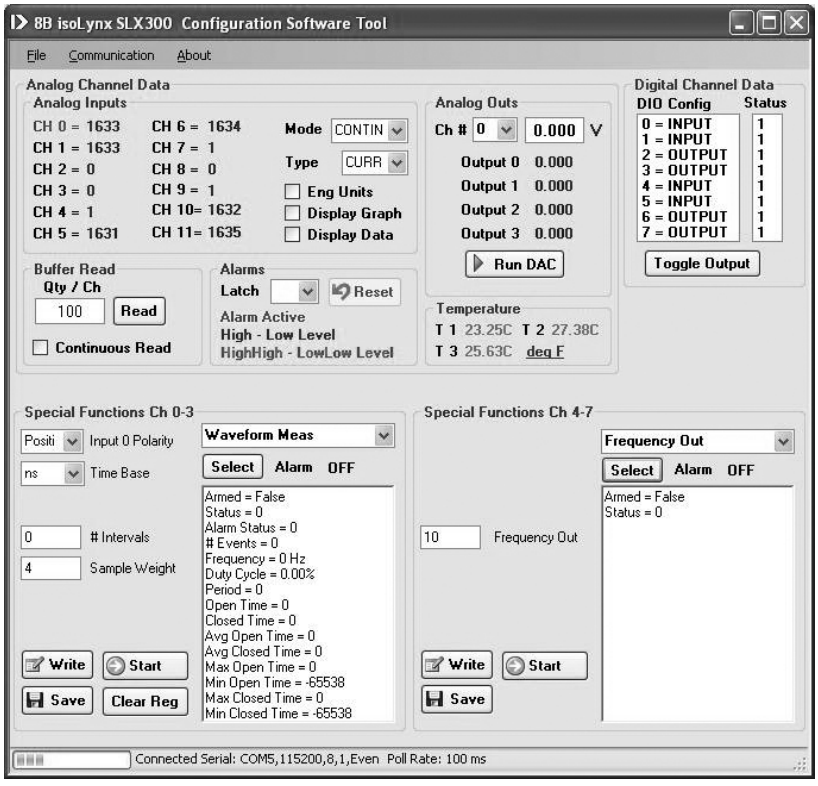

Figure 2: Configuration Tool - Channel Monitoring and Data Display

©1995-2017 Dataforth Corporation, All Rights Reserved ISO9001:2008-Registered QMS

Specifications

Typical* at T_A = +25°C and +5VDC power

8B isoLynx® SLX300	
Analog Input	
Channel Count	12
Module Type	Mix and match input types on a per-channel basis 8B30/31/32/33/34/35/36/37/ 38/40/41/42/43/45/47/50/51/PT All models with 0-5V output
Accuracy(1)	±0.07%
Resolution	±0.024%
Cold Junction Compensation	
Accuracy, +25ºC	±0.5ºC
Accuracy, –40ºC to +85ºC	±1.5ºC
Input Protection	240VAC continuous, ESD per EN61000-6-2
Isolation (Input-to-Output & Ch-to-Ch)	1500Vrms max
Throughput(2)	3.0kS/s max continuous, 100kS/s max burst(3), programmable
Sampling Buffer	192k sample, 384k bytes
Scan List	Up to 48 entries in any order
Averaging	Selectable weight
Alarm	Program High/High-High/Low/Low-Low per channel
Alarm Response	Programmable analog out, digital out
Analog Output	
Channel Count	4
Module Type	Mix and match output types on a per-channel basis 8B39/49 All models with 0-5V input
Accuracy(1)	±0.07%
Resolution	±0.024%
Output Protection	40VAC max, ESD per EN61000-6-2
Isolation (Ouput-to-Input & Ch-to-Ch)	1500Vrms max
Throughput(2)	1.0kS/s max continuous 4.0kS/s max burst, programmable
Programmable Waveform	16k samples per channel
Digital I/O	
Channel Count	8
Module Type	Mix and match I/O types on a per-channel basis SCMD-MIAC5x, SCMD-MIDC5x SCMD-MOAC5x, SCMD-MODC5x SCMD-MORx5, SCMD-PT
Isolation (Input-to-Output & Ch-to-Ch)	1500Vrms max
Throughput(2)	2.0kS/s max continuous

8B isoLynx® SLX300 (continued)	
Digital I/O Special Functions	
Pulse/Frequency Counter	Frequency to 80kHz, count to 10M, RPM to 65k
Pulse/Frequency Counter with De-bounce	Frequency to 50Hz, count to 10M
Waveform Measurement	Frequency to 15kHz, # periods, pulse width, period, duty cycle
Time Between Events	Min, max, avg, selectable timebase
Frequency Generator	Up to 100kHz
PWM Generator	Selectable timebase
One-Shot Generator	20µs min pulse, programmable pre- and post-delay
Alarm	Program High/High-High/Low/Low-Low per function
Alarm Response	Programmable digital out
Communications	
RS-232	2.4kbps to 921.6kbps, DB-9 connector
RS-485	2.4kbps to 921.6kbps, pluggable screw terminal connector
USB	USB-to-serial bridge (Virtual Communications Port), type B
Ethernet	10/100 Base-T, static IP, RJ-45 connector
Protocol	
RS-232, RS-485, USB	Modbus® RTU
Ethernet	Modbus TCP
Software Tools	Free configuration software tool
Power	
+5VDC	270mA(4)
7-34VDC (8BPWR-2 required)	320mA(4)
Physical	
Dimensions (l)(w)(h)	
Panel Mount	16.24" x 3.47" x 1.92" (413mm x 88mm x 49mm)
DIN Rail Mount	16.24" x 3.47" x 2.00" (413mm x 88mm x 51mm)
Bench Top 1U Enclosure	16.73" x 6.0" x 1.72" (424.9mm x 152.4mm x 43.7mm)
Mounting	Panel or DIN rail Rack-mounted or bench top 1U enclosure
Environmental	
Operating Temp. Range	–40ºC to +85ºC
Storage Temp. Range	–40ºC to +85ºC
Relative Humidity	0 to 95% Noncondensing
Emissions, EN61000-6-4	ISM, Group 1
Radiated, Conducted	Class A
Immunity, EN61000-6-2	ISM, Group 1
RF	Performance A ±0.5% span error
ESD, EFT	Performance B

NOTES:
*Contact factory or your local Dataforth sales office for maximum values.
(1) System accuracy does not include module accuracy or SLX300 CJC accuracy. SLX300 CJC accuracy replaces CJC accuracy in 8B37/47 module datasheets. Reference module datasheets for further details.
(2) Throughput varies with system configuration.
(3) Burst Mode Scan rate is reduced when CJC, linearization, averaging, and/or alarm functions are enabled.
(4) Does not include module power consumption. Reference module datasheets for further details.

©1995-2017 Dataforth Corporation, All Rights Reserved ISO9001:2008-Registered QMS

Ordering Information

Model	Description
SLX300-10(S)*	12-Ch AI, 4-Ch AO, 8-Ch DIO, RS-232, Panel Mount
SLX300-20(S)*	12-Ch AI, 4-Ch AO, 8-Ch DIO, RS-485, Panel Mount
SLX300-30(S)*	12-Ch AI, 4-Ch AO, 8-Ch DIO, USB (VCP), Panel Mount
SLX300-40(S)*	12-Ch AI, 4-Ch AO, 8-Ch DIO, Ethernet, Panel Mount
SLX300-10D(S)*	12-Ch AI, 4-Ch AO, 8-Ch DIO, RS-232, DIN Rail Mount
SLX300-20D(S)*	12-Ch AI, 4-Ch AO, 8-Ch DIO, RS-485, DIN Rail Mount
SLX300-30D(S)*	12-Ch AI, 4-Ch AO, 8-Ch DIO, USB (VCP), DIN Rail Mount
SLX300-40D(S)*	12-Ch AI, 4-Ch AO, 8-Ch DIO, Ethernet, DIN Rail Mount
SLX300-10U(S)*	12-Ch AI, 4-Ch AO, 8-Ch DIO, RS-232, SD Card, 1U Box
SLX300-20U(S)*	12-Ch AI, 4-Ch AO, 8-Ch DIO, RS-485, SD Card, 1U Box
SLX300-50U(S)*	12-Ch AI, 4-Ch AO, 8-Ch DIO, USB (VCP) & Ethernet, SD Card, 1U Box
SLX146-02, -07	Null Modem Serial Cable, Female DB-9 to Female DB-9; 2m, 7m
SLX147-01, -02, -05	USB Cable, Type A to Type B; 1m, 2m, 5m
SLX370(1)	Software Tools, Config Sample, LabVIEW™ VI
SLX380(1)	Quick Start Guide, Hardware Manual, Software Manual
SLX141-01, -02, -07	Ethernet Cable, 1m, 2m, 7m
SLX141-X01, -X02, -X07	Ethernet Crossover Cable, 1m, 2m, 7m
SCMXRK-002	19" Metal Rack for Mounting Backpanels
SCMXRAIL1-XX	DIN EN50022-35x7.5 (slotted steel), length -XX in meters
SCMXRAIL3-XX	DIN EN50022-35x15 (slotted steel), length -XX in meters
8B30-04, -05, -06	milliVolt Input Modules, 3Hz BW
8B31-04, -05, -06, -08, -10, -13	Voltage Input Modules, 3Hz BW
8B32-01, -02	Current Input Modules, 3Hz BW
8B34-01, -02, -03, -04	2- and 3-Wire RTD Input Modules, 3Hz BW
8B35-01, -02, -03, -04	4-Wire RTD Input Modules, 3Hz BW
8B36-01, -02, -03, -04	Potentiometer Input Modules, 3Hz BW
8B37J, K, T, R, S	Thermocouple Input Modules, Non-linearized, 3Hz BW

Model	Description
8B38-06, -07, -08	Strain Gage Input Modules, 3kHz BW
8B38-36, -37, -38	Strain Gage Input Modules, 3Hz BW
8B39-01, -03	Current Output Modules, 100Hz BW
8B40-04, -05, -06	milliVolt Input Modules, 1kHz BW
8B41-04, -05, -06, -08, -10, -13	Voltage Input Modules, 1kHz BW
8B42-01, -02	2-Wire Transmitter Input Modules, 100Hz BW
8B43-11 through -15	DC LVDT Input Modules, 1kHz BW
8B45-01 through -08	Frequency Input Modules
8B47J-xx, K-xx, T-xx	Thermocouple Input Modules, Linearized, 3Hz BW
8B49-01, -02	Voltage Output Modules, 100Hz BW
8B50-04, -05, -06	milliVolt Input Modules, 20kHz BW
8B51-04, -05, -06, -08, -10, -13	Voltage Input Modules, 20kHz BW
8BPT	Non-Isolated Signal Pass Thru Module
8BPWR-2	Power Supply Module, 7-34VDC Input
SCMD-MIAC5x	Miniature Digital AC Input Modules
SCMD-MIDC5x	Miniature Digital DC Input Modules
SCMD-MOAC5x	Miniature Digital AC Output Modules
SCMD-MODC5x	Miniature Digital DC Output Modules
SCMD-MORx5	Miniature Relay Output Modules
SCMD-PT	Miniature Pass Thru Module
SCMXPRT-001	Power Supply, 5VDC, 1A, 120VAC Input
SCMXPRE-001	Power Supply, 5VDC, 1A, 220VAC Input
SCMXPRT-003	Power Supply, 5VDC, 3A, 120VAC Input
SCMXPRE-003	Power Supply, 5VDC, 3A, 220VAC Input
PWR-4505	Power Supply, 5VDC, 5A, 85-264VAC Input
PWR-PS5R15W	Power Supply, 24VDC, 0.65A, 100-240VAC Input
PWR-PS5R30W	Power Supply, 24VDC, 1.3A, 100-240VAC Input
PWR-PS5R60W	Power Supply, 24VDC, 2.5A, 100-240VAC Input
PWR-PS5R120W	Power Supply, 24VDC, 5.0A, 100-240VAC Input

NOTES: *Add an 'S' suffix to any SLX300 system part number to order the system bundled with ReDAQ® Shape software. (1) Downloadable from website.

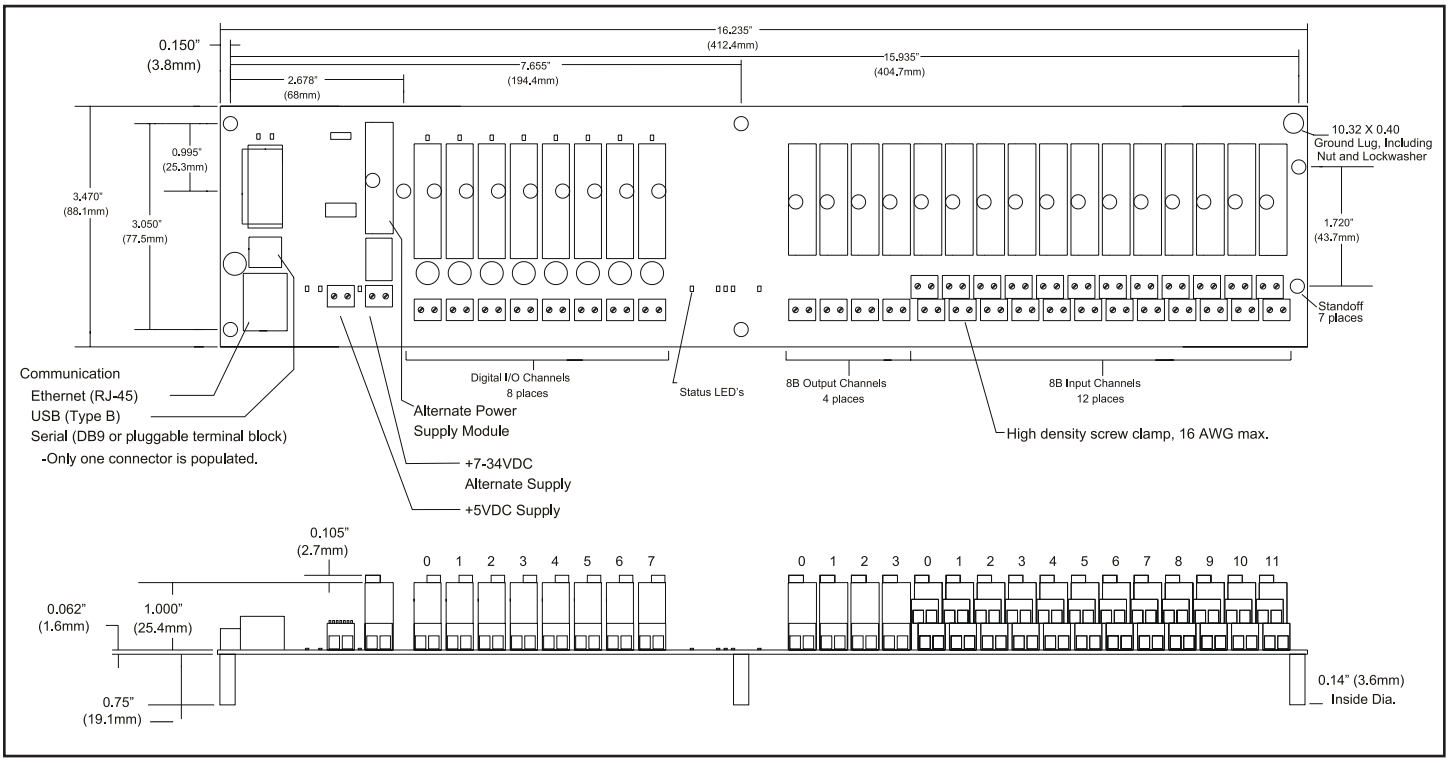

Figure 3: 8B isoLynx SLX300 Block Diagram

©1995-2017 Dataforth Corporation, All Rights Reserved ISO9001:2008-Registered QMS

SLX930

ReDAQ® Shape Software for 8B isoLynx® SLX300

Description

ReDAQ Shape, Dataforth's out-of-the-box DAQ software for the SLX300, provides the easiest and most efficient development tool to create, save, and open graphical user interface projects for test, process, data collection and data analysis applications. Built-in functions in the Acquire and Analyze panels are pre-configured and can be used without setup. Just three easy steps are required to create data acquisition and control projects using 18 high quality tools and powerful isoLynx® SLX300 functions. These projects are developed and executed in the software's Presentation panel.

The ReDAQ Shape tools include:

- Button
- Picture Box
- Text Box
- Group Box
- Label
- LED
- Switch
- Numeric Edit
- Thermometer
- Slide
- Tank
- Gage
- Meter
- Knob
- Chart Recorder
- Oscilloscope
- XY Plot
- Discrete Waveform Graph

ReDAQ Shape also provides the most effective way to configure and customize SLX300 functions for specific application requirements. The toolbox tools are easily moved, re-sized, cut, copied, pasted, and deleted. They also support any graphical file format so presentations made with other software can be loaded into ReDAQ Shape.

In contrast to other graphical software environments, ReDAQ Shape software for SLX300 has a very short user-learning curve. It is based on programming tools incorporated from Microsoft Visual Studio® and National Instruments Measurement Studio®, ensuring its ease of use and integrated, across-theboard applicability for data acquisition and control applications.

Features

- 3 Easy Steps to Create Customized Presentation Panels
- No Setup or Configuration Required in Acquire and Analyze Panels
- 18 High Quality Toolbox Tools
- Supports Any Graphical File Format
- Integrated, Across-the-Board Applicability
- Most Effective Way to Set Up & Configure 8B isoLynx SLX300 Functions:
  - Continuous and burst scan modes for 12 analog input and 4 analog output channels
  - Automatically scales data from counts to engineering units
  - 8 discrete I/O with 7 special functions: pulse/frequency counter, pulse/frequency counter with de-bounce, waveform measurement, time between events, frequency generator, PWM generator, one-shot pulse generator
  - Customer user tag name for any input and output
  - Cold Junction Compensation and linearization for thermocouple input modules
  - Control loop and alarm output
  - Three function timer (count-down, 24hr/day, day/time) with 10 programmable events

Ordering Information

Model	Description
SLX930	ReDAQ Shape Software for SLX300

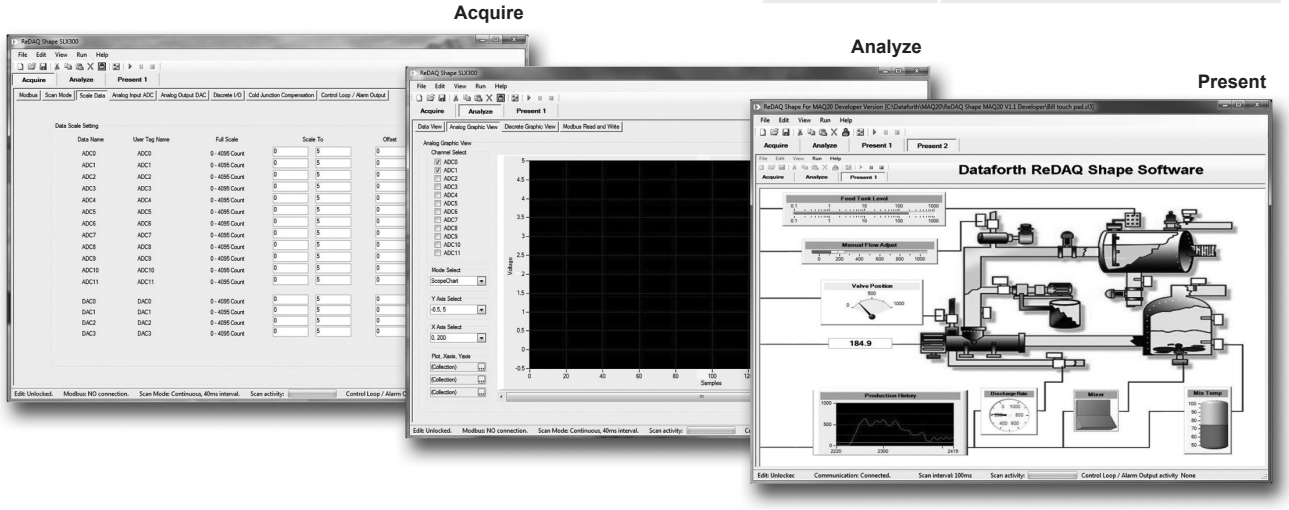

Figure 1: ReDAQ Shape for SLX300 Screen Shots

©1995-2017 Dataforth Corporation, All Rights Reserved ISO9001:2008-Registered QMS

SCM5B isoLynx®

SLX200 Data Acquisition System

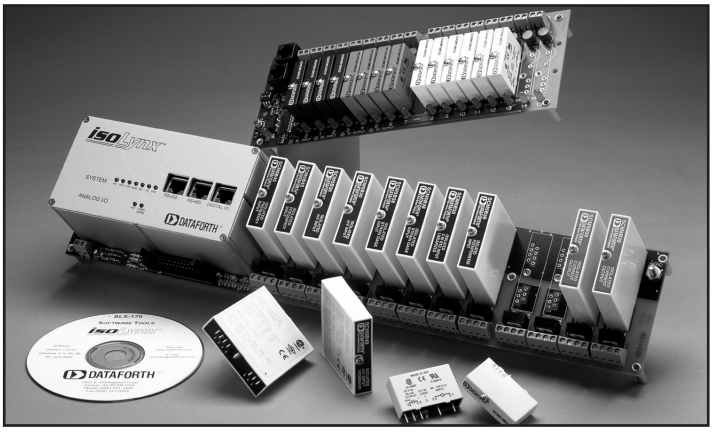

Features

- Modbus® RTU Support on RS-232 and RS-485
- Modbus TCP Support (optional)
- 1500Vrms Input-to-Output & Channel-to-Channel Isolation
- 240Vrms Field-side Protection
- 16-Bit A/D, D/A
- Up to 6-Pole Analog Input Filtering
- ±0.012% Base System Accuracy, No Modules
- ±0.005% Base System Linearity, No Modules
- ±0.03% Module Accuracy
- ±0.005% Module Linearity
- Best I/O Selection: 250+ Different I/O Modules
- –40°C to +85°C Operating Temperature
- Free Configuration Software
- All Analog I/O Modules Certified to CSA C/US, CE, and ATEX Requirements
- SLX200 & SLX101 CE Compliant
- SLX200 CSA C/US Certified (Class I, Division 2, Groups A, B, C, D)
- Manufactured per RoHS II Directive 2011/65/EU

Description

Faulty thousand-dollar data acquisition systems can shut down billion-dollar operations. The SCM5B isoLynx® SLX200 is a fast, intelligent, fully isolated data acquisition system providing superior reliability, accuracy, and isolation for a wide range of rugged industrial applications. It offers maximum flexibility of analog and digital I/O selection at competitive prices for a broad range of factory automation, process control, test and measurement, machine control, and data acquisition applications. The isoLynx SLX200 implements the industry standard Modbus® RTU and TCP protocols, thereby enabling communication with a wide variety of existing third-party software drivers and HMI/SCADA packages. It is fully certified by Modbus-IDA and compatible with OPC.

All I/O Channel-to-Channel Isolated

The flexible, modular design combines a 6- or 12-channel I/O Controller base system and optional 8- or 16-channel expansion backplanes, which can be either panel or DIN rail mounted (see Figure 1).

One I/O Controller unit can operate up to 60 channels of differential analog I/O and 128 channels of digital I/O, using Dataforth's SCM5B analog and SCMD digital modules. The Controller contains a powerful high-speed microcontroller, A/D and D/A subsystem, communication interface, data storage memory, and status LEDs. The A/D system is built around a 16-bit, successive approximation converter and can convert a maximum 60-channel configuration in 17msec. The D/A converter is also a 16-bit device and can write a maximum 60-channel configuration in 33msec.

Industry's Widest I/O Selection

By selecting from over 250 standard and custom single-channel SCM5B analog I/O modules, the isoLynx SLX200 can interface to a broad spectrum of analog signals, including millivolt, volt, milliamp, amp, linearized and non-linearized thermocouple, RTD, potentiometer, slidewire, strain gage, AC to True RMS output, frequency, 2-wire transmitter, and transducers requiring DC excitation. Analog output modules are available which provide a wide selection of current or voltage output ranges. Industry standard miniature digital I/O modules are used for digital AC/DC input and output requirements. Users can mix and match most I/O module types on a per-channel basis, thus reducing wasted I/O channels and saving costs.

Interface to digital signals is provided by the dedicated SLX101 digital I/O backpanel. This intelligent backpanel is designed to interface to the SLX200 but can also be used stand-alone for digital I/O only systems.

The operation and storage temperature range for the SCM5B isoLynx SLX200 is –40°C to +85°C; the relative humidity is 0 to 95% noncondensing. Power requirement is +5VDC, 2.5W base system with no modules installed. The SLX200 and SLX101 are CE Compliant. SLX200 is CSA C/US Certified for Class I, Division 2 Hazardous Locations.

Flexible Communications and Configuration

The SCM5B isoLynx SLX200 communicates on RS-232/RS-485 serial links up to 115.2kbps or 10Mb/s Ethernet. Up to 32 systems can be multidropped on the RS-485 serial link and up to 4 sockets are supported on Ethernet. Optional Ethernet communication boards are available; these can be factory installed or field upgradeable.

The communication protocol is Modbus RTU for RS-232/RS-485 or Modbus TCP for Ethernet. Modbus is an open, industry-standard protocol that defines how devices on a network or bus communicate with each other. Full certification of the SCM5B isoLynx SLX200 by Modbus-IDA ensures the device can be integrated onto existing Modbus networks, and most common Modbus function codes are supported. The system is also OPC compatible.

As device configuration is performed using standard Modbus function codes, any third-party software application that supports the Modbus RTU and/or Modbus TCP protocol can be used to configure the device. Configuration parameters are stored in non-volatile memory, so configuration only has to happen once. Free configuration software is provided to ensure configuration is easy and intuitive (see Figure 2 and Figure 3).

©1995-2017 Dataforth Corporation, All Rights Reserved ISO9001:2008-Registered QMS

Powerful Firmware Features

The SCM5B isoLynx SLX200 hosts many powerful firmware features. Two analog scan modes are supported: one for general purpose signal monitoring with running average, maximum, and minimum values available for each analog input; the other with user-configurable scan parameters such as scan list, scan rate, and scan count, used to obtain data with highly accurate time correlation between samples. Configurable default output values ensure output signals get set at safe values when unexpected power outages or brownouts occur. Power-on self-test results can be obtained visually by glancing at a status LED or programatically by reading the appropriate register on the device. A section of memory is set aside for general purpose user data, some of which is stored in non-volatile memory.

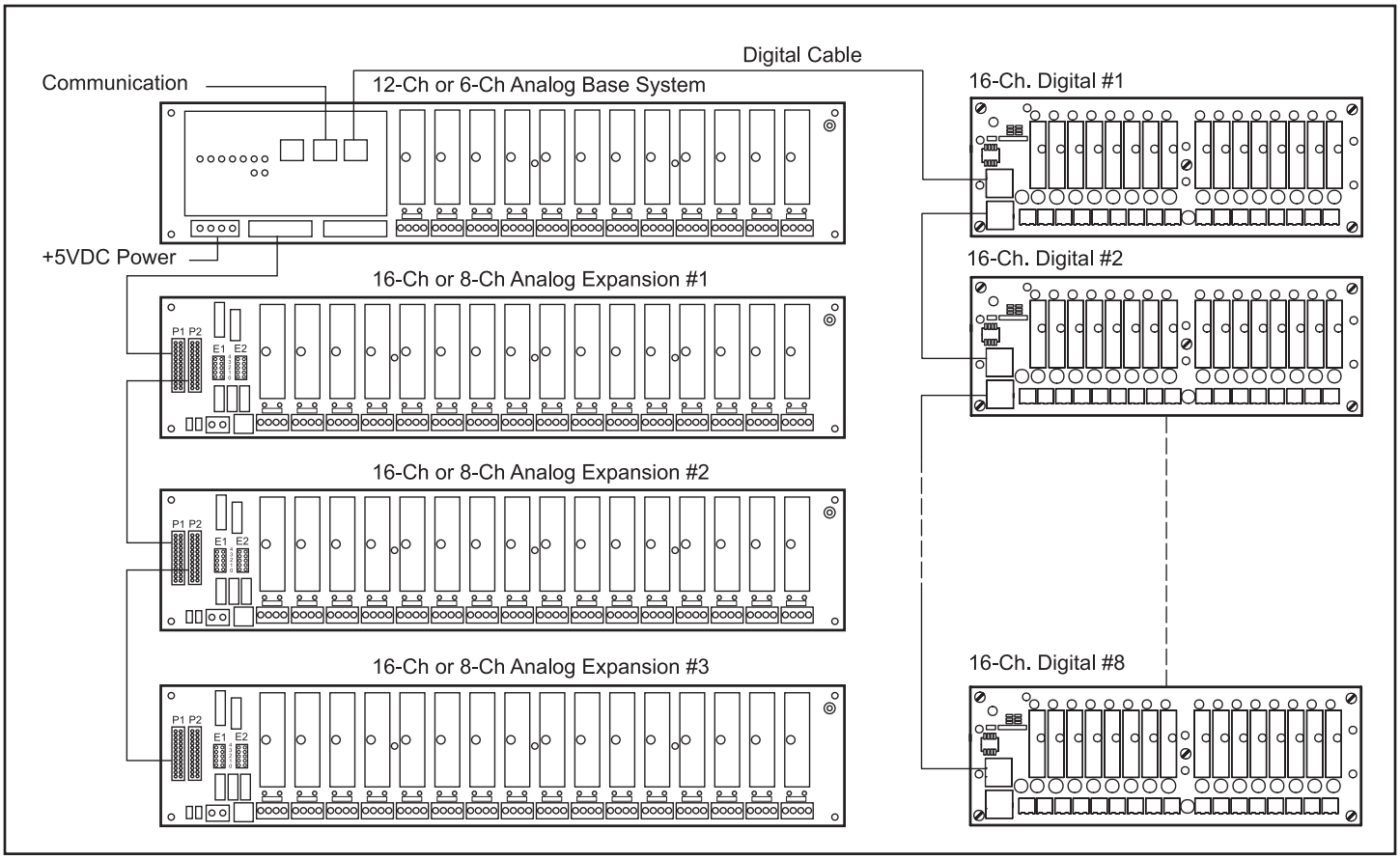

Figure 1: SCM5B isoLynx SLX200 Block Diagram

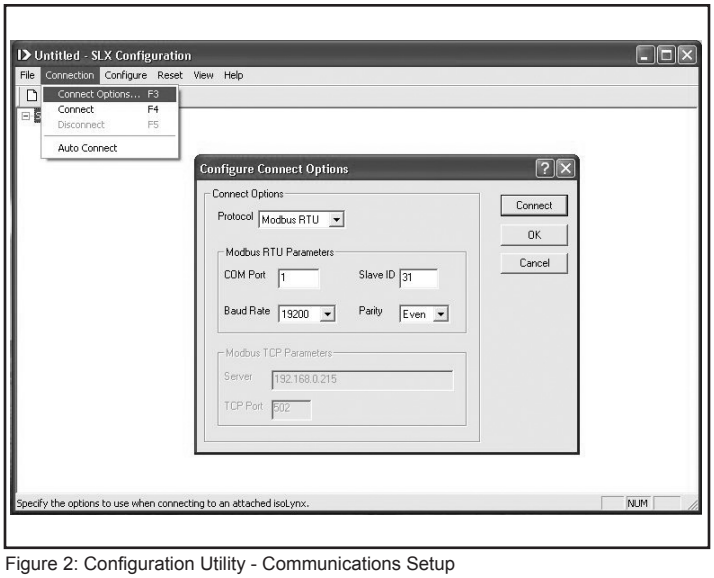

Figure 2: Configuration Utility - Communications Setup

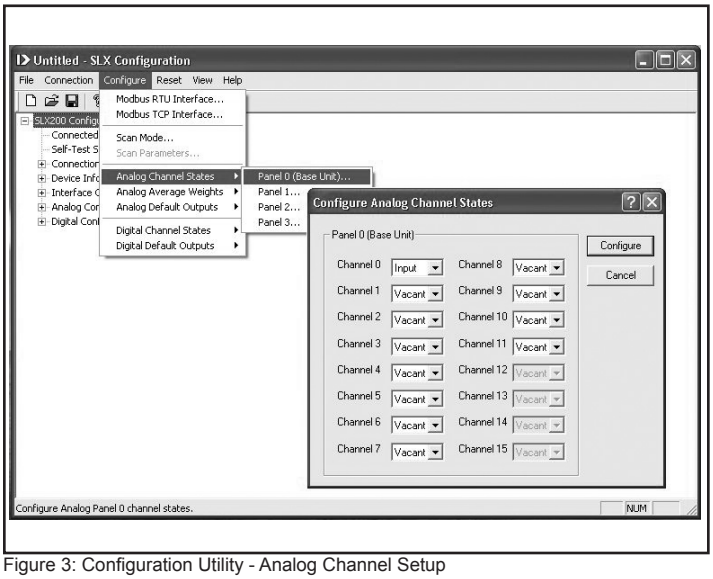

Figure 3: Configuration Utility - Analog Channel Setup

©1995-2017 Dataforth Corporation, All Rights Reserved ISO9001:2008-Registered QMS

Specifications

Typical* at T_A = +25°C and +5VDC power

5B isoLynx® SLX200 Analog I/O Base Unit	
General System	
Protocol	Modbus® RTU or TCP, OPC Server Compatible
I/O Capability	One 6-ch or 12-ch backpanel minimum; Expandable to 60-ch Analog I/O, 128-ch Digital I/O
Software Tools	Free Configuration Utility, Win32 DLL, LabVIEW™ VI library
Digital System	
Microcontroller	High Performance RISC
Status LEDs	+5V, System Status, TD/RD (Serial), LNK/ACK (Ethernet)
Failsafe Features	Watchdog Timer & Brownout Detection - Reset to user defined configuration
Communication Interface	
Serial I/O	Separate RJ-45 modular phone jacks for RS-232 and RS-485 115.2kbps max
Port for SLX101 Digital I/O Panel	RJ-45 modular phone jack, 2-wire RS-485
RS-485	2-wire or 4-wire, 4000 feet max distance, 32 max multidrops, non-isolated
	To isolate, extend, or convert RS-232 or RS-485, use Dataforth LDM and DCP Data Communication products
Ethernet	RJ-45 modular phone jack, 10Base-T Default IP Address 192.168.0.215, Keep-alive timeout 7200s
Analog I/O	
Channels	Mix and match I/O types on a per channel basis(1) Maximum 60-ch differential I/O of SCM5B modules Input modules must have system output of ±5V or 0 to +5V (±10V or 0 to +10V cannot be used)
Calibration	NIST traceable test and calibration sheets ship with modules
System Accuracy	Analog Input ±0.024%(2), Analog Output ±0.006%(2)
Field Connector	High density screw clamp, 14 AWG max, 0.5N-M torque
System Connector	26-pin, male header connector
Ground Network Jumpers	Factory Default R1 100Ω; J1-J4: J1, J2, and J4 installed; J3 not installed. See Hardware User Manual for recommended grounding practices.
A/D Converter	16-bit, ±10V input, 14-bit min accuracy Resolution vs. input range: 16-bit at ±10V, 15-bit at ±5V, 14-bit at 0 to +5V
D/A Converter	16-bit, ±10V output
Isolation	1500Vrms ch-to-ch or ch-to-internal bus
Input Protection	240VAC continuous, ESD
Throughput, Analog Input	8ms for 16 ch (~2000 ch/sec) at 115.2kbps Modbus RTU 17ms for 60 ch (~3600 ch/sec) at 115.2kbps Modbus RTU
Throughput, Analog Output	13ms for 16 ch (~1230 ch/sec) at 115.2kbps Modbus RTU 33ms for 60 ch (~1850 ch/sec) at 115.2kbps Modbus RTU
Expansion Panels	SCMPB02 (16-ch, can use up to 3), SCMPB06 (8-ch, can use up to 6)
Power Supply Requirements	
SLX200-1xx	+5VDC ±5% at 500mA, no modules installed
SLX200-2xx	+5VDC ±5% at 700mA, no modules installed
SLX200-3xx	+5VDC ±5% at 900mA, no modules installed
Dimensions (l)(w)(h)	
SLX200-xx, 12-ch	17.4" x 3.47" x 3.30" (442.0mm x 88.1mm x 83.8mm)
SLX200-xxAx, 6-ch	11.8" x 3.47" x 3.30" (300.7mm x 88.1mm x 83.8mm)
Mounting Options	Panel Mount or DIN Rail Mount
Environmental	
Operating Temp. Range	–40°C to +85°C (–40°C to +70°C for SLX200-2xx,-3xx)
Storage Temp. Range	–40°C to +85°C
Relative Humidity	0 to 95% Noncondensing
Emissions EN61000-6-4	ISM, Group 1
Radiated, Conducted	Class A
Immunity EN61000-6-2	ISM, Group 1
RF	Performance A ±0.5% Span Error
ESD, EFT	Performance B
Certifications	
CE Compliant	
CSA, FM	Class I, Division 2, Groups A, B, C, D Hazardous Locations
Modbus	IDA Conformance Tested

5B isoLynx® SLX101 Digital I/O Backpanel	
General System	
Protocol	Modbus RTU or TCP, OPC Server Compatible through SLX200. Proprietary as stand-alone.
I/O Capability	One 16-ch backpanel minimum. Expandable to 128-ch Digital I/O.
Digital System	
Microcontroller	High Performance RISC
Status LEDs	+5V, System Status, Channel State
Failsafe Features	Watchdog Timer & Brownout Detection - Reset to user defined configuration
Communication Interface	
Serial I/O	Two RJ-45 modular phone jacks for daisy-chain connection
RS-485 2W	115.2kbps max 4000 feet max distance, 32 max multidrops, non-isolated
Digital I/O	
Channels	Mix and match I/O types on a per channel basis
Field Connector	High density screw clamp, 14 AWG max, 0.5N-M torque
Isolation	1000 Vrms ch-to-ch or ch-to-internal bus
Throughput	8ms for 16 ch (~2000 ch/sec) at 115.2kbps Modbus RTU 27ms for 128 ch (~4740 ch/sec) at 115.2kbps Modbus RTU
Power Supply Requirements	+5VDC ±5% at 40mA, no modules installed
Dimensions (l)(w)(h)	10.0" x 3.47" x 1.95" (254.0mm x 88.1mm x 49.5mm)
Mounting Options	Panel Mount or DIN Rail Mount
Environmental	
Operating Temp. Range	–40°C to +85°C
Storage Temp. Range	–40°C to +85°C
Relative Humidity	0 to 95% Noncondensing
Emissions EN61000-6-4	ISM, Group 1
Radiated, Conducted	Class A
Immunity EN61000-6-2	ISM, Group 1
RF	Performance A ±0.5% Span Error
ESD, EFT	Performance B
Certifications	
CE Compliant	
CSA, FM	Not covered under the SLX200 certifications. Must qualify separately based on source of I/O modules.

NOTES:
*Contact factory or your local Dataforth sales office for maximum values.
(1) Modules with system output of ±10V or 0-10V cannot be used in the SLX200 systems. This includes SCM5Bxx-xxD, SCM5B392-13, -14, SCM5B42-02, and SCM5B48-01.
(2) 10V span for analog input, 20V span for analog output. Does not include SCM5B module accuracy.

©1995-2017 Dataforth Corporation, All Rights Reserved ISO9001:2008-Registered QMS

Ordering Information

Model	Description
SLX200-10[1]	12-Ch, RS-232/485, Panel Mount
SLX200-20[1]	12-Ch, Ethernet, Panel Mount
SLX200-30[1]	12-Ch, Dual-Ethernet, Panel Mount
SLX200-11[1]	12-Ch, RS-232/485, No CJC[2], Panel Mount
SLX200-21[1]	12-Ch, Ethernet, No CJC[2], Panel Mount
SLX200-31[1]	12-Ch, Dual-Ethernet, No CJC[2], Panel Mount
SLX200-10D[1]	12-Ch, RS-232/485, DIN Rail Mount
SLX200-20D[1]	12-Ch, Ethernet, DIN Rail Mount
SLX200-30D[1]	12-Ch, Dual-Ethernet, DIN Rail Mount
SLX200-11D[1]	12-Ch, RS-232/485, No CJC[2], DIN Rail Mount
SLX200-21D[1]	12-Ch, Ethernet, No CJC[2], DIN Rail Mount
SLX200-31D[1]	12-Ch, Dual-Ethernet, No CJC[2], DIN Rail Mount (For 6-Ch. Base Unit, See Note[1])
SLX101	Backpanel Digital: 16-Ch
SLX101-D	Backpanel Digital: 16-Ch, DIN Rail Mount
SLX141-01,-02,-07	Ethernet and Serial Cable Options
SLX141-X01,-X02,-X07	Ethernet Crossover Cable Options
SLX142,143	RJ45 to DB9 Adapters
SLX144	RJ45 RS-485 Multidrop Adapter
SLX145	Fuse 4A, package of 5
SLX270[3]	Software Tools and User Manuals
SLX280[3]	Software and Hardware User Manuals
SCMPB02	Backpanel Analog: 16-Ch
SCMPB02-1	Backpanel Analog: 16-Ch, No CJC[3]
SCMPB02-2	Backpanel Analog: 16-Ch, DIN Rail Mount
SCMPB02-3	Backpanel Analog: 16 Ch, No CJC[3], DIN Rail Mount
SCMPB06	Backpanel Analog: 8-Ch
SCMPB06-1	Backpanel Analog: 8-Ch, No CJC[3]
SCMPB06-2	Backpanel Analog: 8-Ch, DIN Rail Mount
SCMPB06-3	Backpanel Analog: 8-Ch, No CJC[3], DIN Rail Mount
SCMXRK-002	Accessory: 19-Inch Rack Analog Backpanels
SCM5B30/31[4]	Analog Voltage Input Modules
SCM5B32[4]	Analog Current Input Modules
SCM5B33[4]	Isolated True RMS Input Modules
SCM5B34[4]	Linearized 2- or 3-Wire RTD Input Modules
SCM5B35[4]	Linearized 4-Wire RTD Input Modules
SCM5B36[4]	Potentiometer Input Modules
SCM5B37[4]	Thermocouple Input Modules
SCM5B38[4]	Strain Gage Input Modules
SCM5B39	Current Output Modules
SCM5B392[4]	Matched-Pair Servo/Motor Controller Modules
SCM5B40/41[4]	Analog Voltage Input Modules, Wide Bandwidth
SCM5B42[4]	2-Wire Transmitter Interface Modules
SCM5B43[4]	General Purpose Input Modules, with DC Exc.
SCM5B45[4]	Frequency Input Modules
SCM5B47[4]	Linearized Thermocouple Input Modules
SCM5B49	Voltage Output Modules
SCMD-MIAC5x	Miniature Digital AC Input Modules
SCMD-MIDC5x	Miniature Digital DC Input Modules
SCMD-MOAC5x	Miniature Digital AC Output Modules
SCMD-MODC5x	Miniature Digital DC Output Modules
SCMD-MORx5	Miniature Relay Output Modules
SCMXCA004-xx	System interface cable for both analog backpanels
SCMXPRT-001	Power supply, 1A, 5VDC, 120VAC U.S.
SCMXPRE-001	Power supply, 1A, 5VDC, 220VAC European
SCMXPRT-003	Power supply, 3A, 5VDC, 120VAC U.S.
SCMXPRE-003	Power supply, 3A, 5VDC, 220VAC European

NOTES:
(1) SLX200 suffix changes to -xxA or -xxAD for 6-ch base unit.
(2) Cold Junction Compensation. Required for SCM5B37 and SCM5B47.
(3) Downloadable from website.
(4) Modules with system output of ±10V or 0-10V cannot be used in the SLX200 systems. This includes SCM5Bxx-xxD, SCM5B392-13, -14, SCM5B42-02, and SCM5B48-01.

©1995-2017 Dataforth Corporation, All Rights Reserved ISO9001:2008-Registered QMS

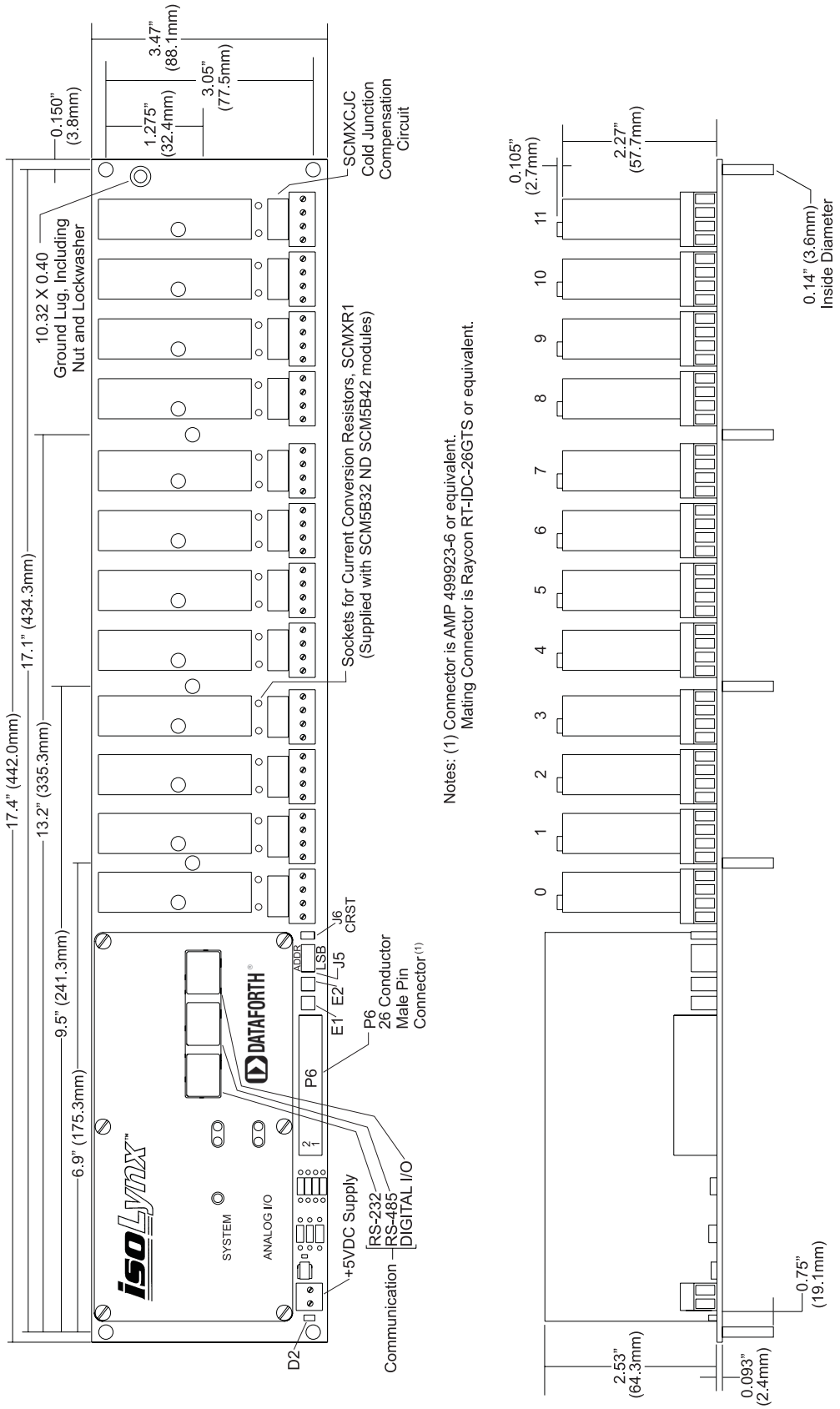

Figure 4: SLX200-xx 12-Channel Base System

©1995-2017 Dataforth Corporation, All Rights Reserved ISO9001:2008-Registered QMS

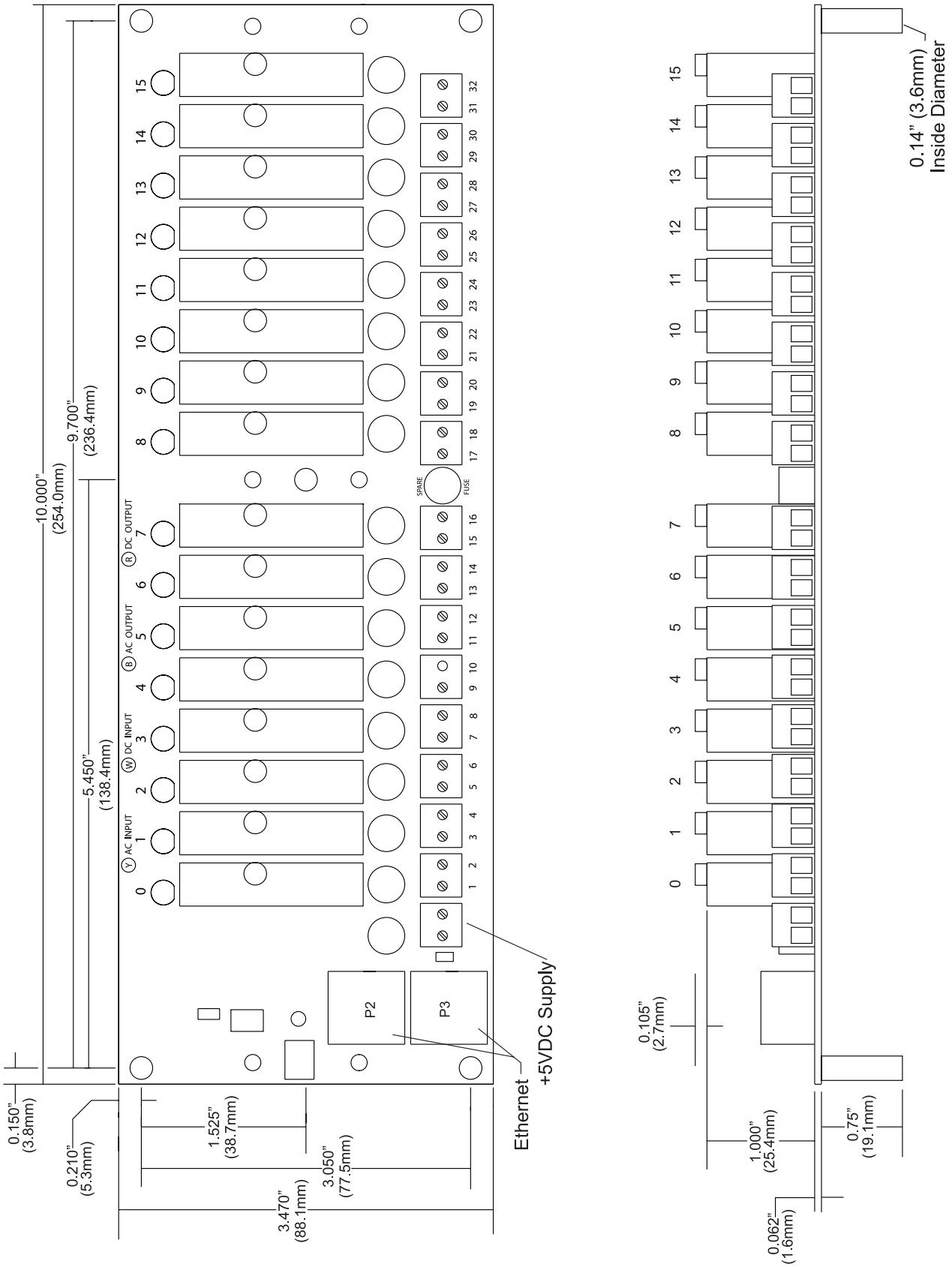

Figure 5: SLX101 Digital I/O Backpanel

©1995-2017 Dataforth Corporation, All Rights Reserved ISO9001:2008-Registered QMS

SCMD

Isolated SCMD Digital I/O Modules

Dataforth offers a broad line of digital input and output modules and accessories providing safe, reliable interfacing to industrial measurement and control applications. When installed near individual field loads, our SCMD series I/O modules create a rugged protective isolation barrier, effective to 4kV, between the field and computer system. Use of these modules can also reduce field wiring costs while establishing an economical, manageable approach for system expansion and repair.

The SCMD Series

SCMD miniature digital I/O modules are solid-state devices which send "ON" and "OFF" electrical signals to and from a computer. The input modules, depending on the type selected, convert AC or DC voltages to DC logic signals and send them to the computer system. Output modules work in the opposite direction, switching either AC or DC circuits on or off in response to logic-level voltage commands from the computer. SCMD modules are available in "miniature" versions of four basic types: AC input, DC input, AC output, and DC output.

- **SCMD–MIAC and –MIDC** miniature input modules are used for sensing "ON" and "OFF" AC or DC voltage levels in the ranges 10-60, 90-140, and 180- 280VAC and 3.3-32 and 10-60VDC. Models with low noise, fast switching, and other special features are also available.
- **SCMD–MOAC and –MODC** are miniature output modules accepting 5VDC or 24VDC inputs and providing several different output ranges, including 12/24 to 140/280VAC and 0/3/5 to 50/60/200VDC. Fast switching, and other special options are also available.
- **SCMD–MORO and –MORC** are miniature relay output modules used for switching AC and DC loads up to 125Vrms or 100VDC at maximum 30WDC or 62.5VA.

Features

- 4000Vrms Optical Isolation
- Industry Standard Packaging
- Input Modules Incorporate Input Filtering for Transient-Free Switching
- Complete Selection of Backpanels and Accessories
- Optional Low Noise, Fast Switching Models
- UL Listed, CSA Certified, CE Compliant
- Manufactured per RoHS Directive 2002/95/EC

Applications

Input Modules Interface To:

- Proximity Switches
- Limit Switches
- Photoelectric Switches
- TTL Devices
- Pushbuttons

Output Modules For Switching AC and DC Loads:

- Relays
- Solenoids
- Motor Starters
- Indicator Lamps

SCMD Selection Guide

DIGITAL INPUT MODULES, MINIATURE Page 197

MODEL	INPUT RANGE	SUPPLY VOLTAGE
SCMD-MIAC5	90 to 140VAC/DC	5V
SCMD-MIAC5A	180 to 280VAC/DC	5V
SCMD-MIAC5E	10 to 60VAC/DC	5V
SCMD-MIAC24	90 to 140VAC/DC	24V
SCMD-MIAC24A	180 to 280VAC/DC	24V
SCMD-MIDC5	3.3 to 32VDC	5V
SCMD-MIDC5F	3.3 to 32VDC	5V
SCMD-MIDC5N	10 to 60VDC	5V
SCMD-MIDC24	3.3 to 32VDC	24V

DIGITAL OUTPUT & RELAY OUTPUT MODULES, MINIATURE Pages 198 and 199

MODEL	OUTPUT RANGE	SUPPLY VOLTAGE
SCMD-MOAC5	12 to 140VAC	5V
SCMD-MOAC5A	24 to 280VAC	5V
SCMD-MOAC5B	24 to 280VAC	5V
SCMD-MOAC24	12 to 140VAC	24V
SCMD-MOAC24A	24 to 280VAC	24V
SCMD-MODC5	3.0 to 60VDC	5V
SCMD-MODC5A	5.0 to 200VDC	5V
SCMD-MODC5ML	1.0 to 50VDC	5V
SCMD-MODC24	3.0 to 60VDC	24V
SCMD-MORO5	100/125 VDC/Vrms	5V
SCMD-MORC5	100/125 VDC/Vrms	5V
SCMD-MORO24	100/125 VDC/Vrms	24V
SCMD-MORC24	100/125 VDC/Vrms	24V

DIGITAL I/O MODULE ACCESSORIES Page 200

SCMD-PB4/D	4-Ch Backpanel, Full Size & Miniature / DIN Mount
SCMD-PB4R/D	4-Ch Backpanel, Full Size & Miniature, Output Only / DIN Mount
SCMD-PB8SM/D	8-Ch Backpanel, Miniature / DIN Mount
SCMD-PB16SM/D	16-Ch Backpanel, Miniature / DIN Mount
SCMD-PB16TSM/D	16-Ch Backpanel, Miniature, Screw Term I/O / DIN Mount
SCMD-PB24SM/D	24-Ch Backpanel, Miniature / DIN Mount
SCMD-JM8	Board Jumper, Miniature

Digital Input Modules - Model No. Suffixes Identifying Optional Features

Suffix	Feature
A	High voltage versions (280VAC for AC modules).
E	Low voltage 10VAC input for AC modules.
F	Fast-switching version of DC modules.
N	Enhanced noise immunity version of DC modules.

Digital Output Modules - Model No. Suffixes Identifying Optional Features

Suffix	Feature
A	High voltage versions (280VAC for AC modules, 200VDC for DC modules).
B	High voltage version (280VAC for AC modules) with low leakage output current.
ML	FET output version of DC module, 5.0A, 50VDC.

©1995-2017 Dataforth Corporation, All Rights Reserved ISO9001:2008-Registered QMS

SCMD-MIAC/MIDC

Miniature Digital Input Modules

Description

SCMD digital input modules provide highly reliable and safe interfaces to harsh industrial measurement and control applications. With SCMD modules installed near individual field signals, a reliable isolation barrier is provided between the field wiring computer system. Other benefits include reduction of field wiring costs and establishment of a cost effective and manageable method for system expansion and repair.

The SCMD-MIAC digital input modules are used for sensing ON/OFF AC or DC voltage levels in the ranges of 18-36, 90-140 and 180-280VAC or VDC respectively. They are protected from damage due to high-voltage transients on the input signal.

The SCMD-MIDC digital input modules provide DC voltage sensing at the lower ranges of 3.3 to 32VDC and 10 to 60VDC.

High voltage, low voltage, fast switching, and low noise options are available, designated by suffixes “A”, “E”, “F”, and “N” respectively.

Five backpanels are available for mounting SCMD-M digital input modules. See “Accessories” section.

Features

- Plug into Backpanels for Miniature or Full-Sized Modules
- AC Inputs for 24V, 120V, 240V
- DC Inputs for 3.3 to 32V, 10 to 60V
- 4000Vrms Optical Isolation
- Open-Collector Output
- Industry-Standard Pinout and Footprint
- Operating Temperature –30°C to +80°C
- UL Listed, CSA Certified, CE Compliant

Ordering Information

Model	Input Range	Supply Voltage
SCMD-MIAC5	90 to 140VAC/DC	5V
SCMD-MIAC5A	180 to 280VAC/DC	5V
SCMD-MIAC5E	10 to 60VAC/DC	5V
SCMD-MIAC24	90 to 140VAC/DC	24V
SCMD-MIAC24A	180 to 280VAC/DC	24V
SCMD-MIDC5	3.3 to 32VDC	5V
SCMD-MIDC5F	3.3 to 32VDC	5V
SCMD-MIDC5N	10 to 60VDC	5V
SCMD-MIDC24	3.3 to 32VDC	24V

Digital Input Modules - Model No. Suffixes Identifying Optional Features

Suffix	Feature
A	High voltage versions (280VAC for AC modules).
E	Low voltage 10VAC input for AC modules.
F	Fast-switching version of DC modules.
N	Enhanced noise immunity version of DC modules.

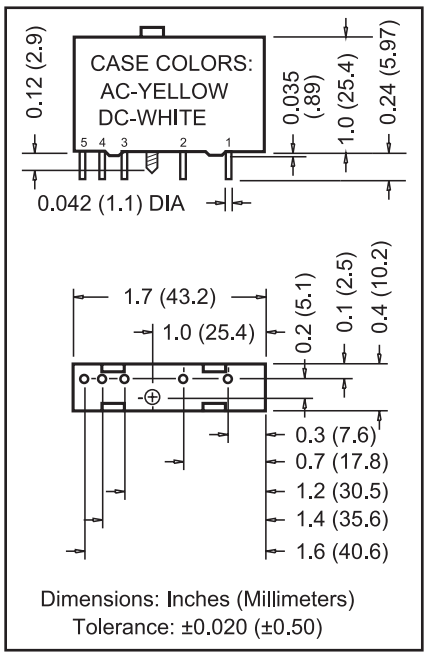

Figure 1: SCMD-MIAC/MIDC Physical Dimensions

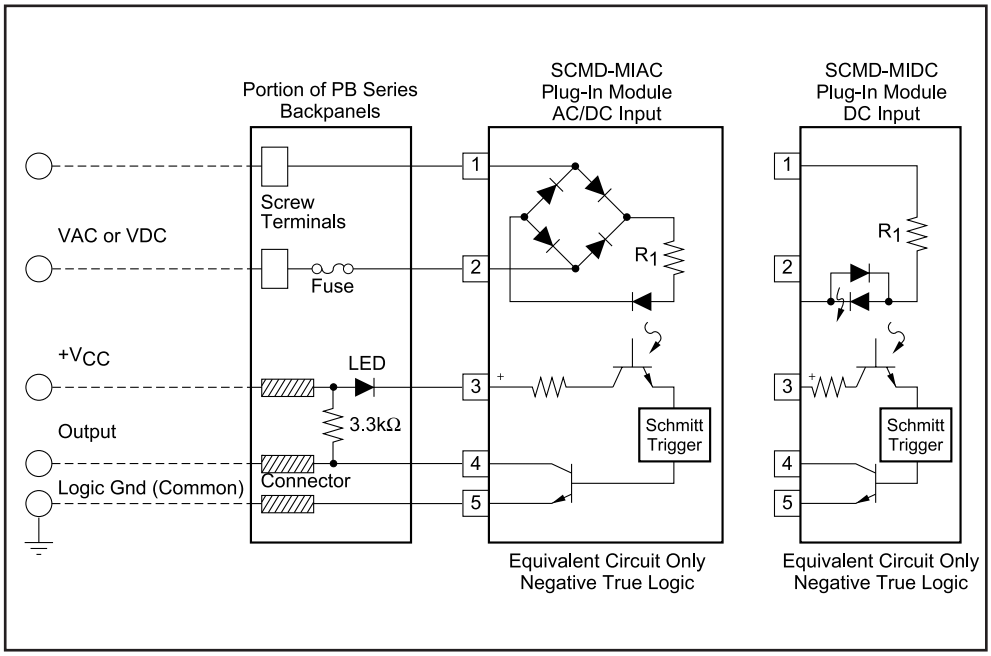

Figure 2: SCMD-MIAC/MIDC Circuit Diagrams

©1995-2017 Dataforth Corporation, All Rights Reserved ISO9001:2008-Registered QMS

SCMD-MOAC/MODC

Miniature Digital Output Modules

Description

The SCMD digital output modules are used for switching AC and DC loads such as relays, solenoids, motor starters, or indicator lamps. All models provide up to 4000Vrms of optical isolation between the field device and the control logic. The AC output modules incorporate zero voltage switching and an RC snubber circuit which allows switching heavy inductive loads. Functionality is denoted by case color—AC modules are black, and DC modules are red.

Six backpanels are available for mounting SCMD-M digital output modules. See "Accessories" section.

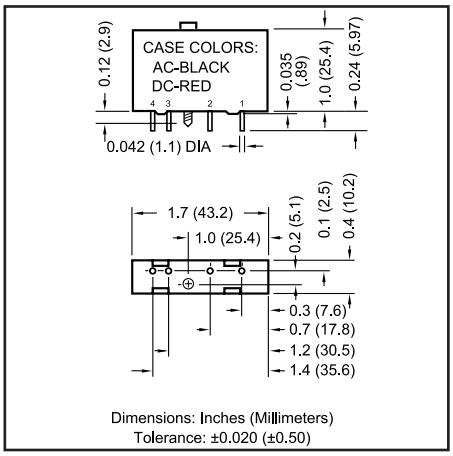

Figure 1: SCMD-MOAC/MODC Physical Dimensions

Digital Output Modules - Model No. Suffixes Identifying Optional Features	
Suffix	**Feature**
A	High voltage versions (280VAC for AC modules, 200VDC for DC modules).
B	High voltage version (280VAC for AC modules) with low leakage output current.
ML	FET output version of DC module, 5.0A, 50VDC.

Features

- AC Modules have High Current Thyristor with 100 Amp Surge Capability
- Zero or Random Turn-On Available in AC Modules
- Plug into Backpanels for Miniature or Full-Sized Modules
- 4000Vrms Optical Isolation (except ML suffix)
- 1500Vrms Optical Isolation (with ML suffix)
- Industry Standard Pinout and Footprint
- 3.5 Amp AC Modules Provide Extra Switching Capability
- 5.0 Amp DC Modules Available
- Operating Temperature –30°C to +80°C
- UL Listed, CSA Certified, CE Compliant

Ordering Information

Model	Output Range	Supply Voltage
SCMD-MOAC5	12 to 140VAC	5V
SCMD-MOAC5A	24 to 280VAC	5V
SCMD-MOAC5B	24 to 280VAC	5V
SCMD-MOAC24	12 to 140VAC	24V
SCMD-MOAC24A	24 to 280VAC	24V
SCMD-MODC5	3.0 to 60VDC	5V
SCMD-MODC5A	5.0 to 200VDC	5V
SCMD-MODC5ML	0 to 50VDC	5V
SCMD-MODC24	3.0 to 60VDC	24V

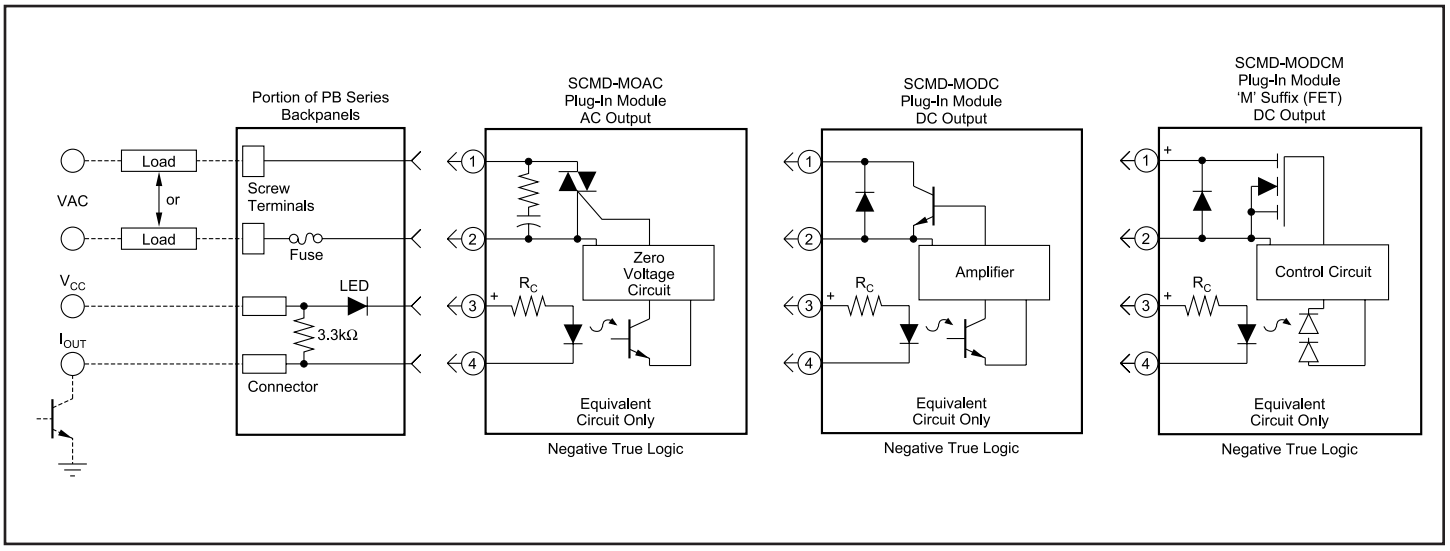

Figure 2: SCMD-MOAC/MODC Circuit Diagrams

©1995-2017 Dataforth Corporation, All Rights Reserved ISO9001:2008-Registered QMS

SCMD-MORO/MORC

Miniature Digital Relay Output Modules

Description

The SCMD digital relay output modules are used for switching AC and DC loads such as resistors in and out of circuit, transistors, SCRs for switching inductive loads, indicator lamps, and low level heaters. All models provide up to 1000Vrms of optical isolation between the field device and the control logic. Functionality is denoted by case color—relay modules are brown.

The -MOROxx models have a normally open contact and the -MORCxx models have a normally closed contact.

Six backpanels are available for mounting SCMD-M relay output modules. See "Accessories" section.

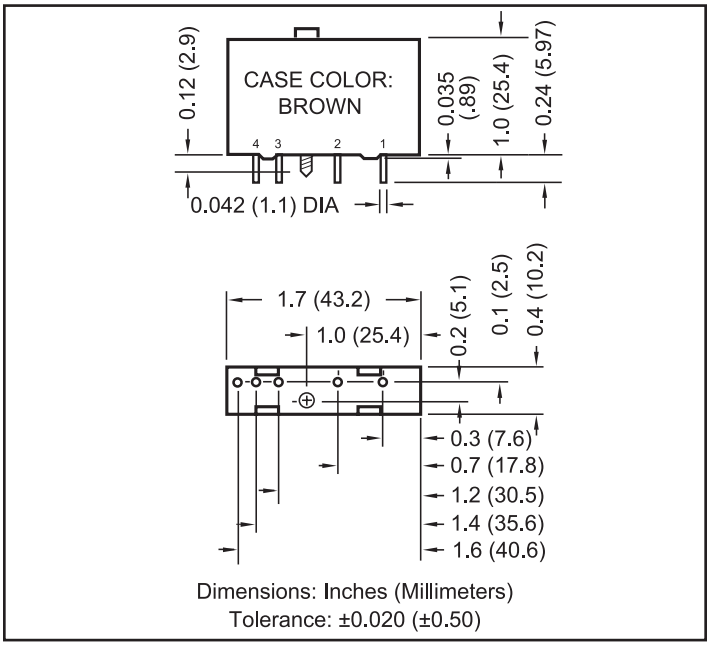

Figure 1: SCMD-MORO/MORC Physical Dimensions

Features

- Resistive Load Only
- Max On-state Current 1A, 30WDC, 62.5VA
- Max Turn-on Time 2ms
- Max Turn-off Time 1ms
- 1000Vrms Isolation
- Plug into Backpanels for Miniature or Full-Sized Modules
- Industry Standard Pinout and Footprint
- Operating Temperature –30°C to +80°C
- UL Listed, CSA Certified, CE Compliant

Ordering Information

Model	Output Range	Supply Voltage	Contact
SCMD-MORO5	100/125 VDC/Vrms	5V	Normally open
SCMD-MORC5	100/125 VDC/Vrms	5V	Normally closed
SCMD-MORO24	100/125 VDC/Vrms	24V	Normally open
SCMD-MORC24	100/125 VDC/Vrms	24V	Normally closed

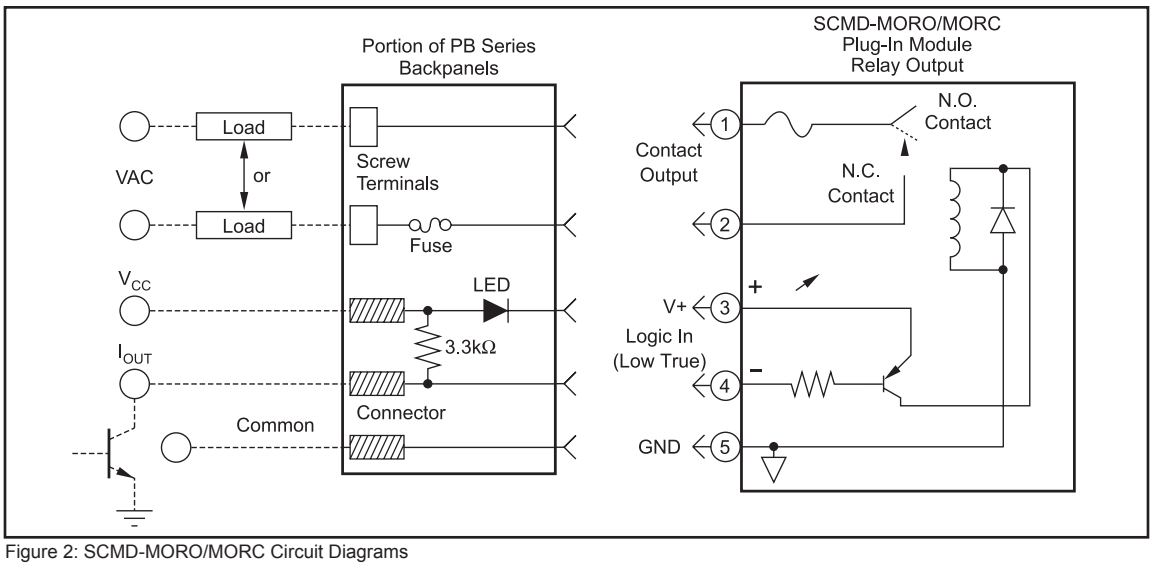

Figure 2: SCMD-MORO/MORC Circuit Diagrams

©1995-2017 Dataforth Corporation, All Rights Reserved ISO9001:2008-Registered QMS

SCMD Accessories*

Digital I/O Module Backpanels

Ordering Information

Model	Description
SCMD-PB4	4-Ch Backpanel, Full Size & Miniature
SCMD-PB4R	4-Ch Backpanel, Full Size & Miniature, Output Only
SCMD-PB8SM	8-Ch Backpanel, 50-trace I/O male card edge
SCMD-PB16SM	16-Ch Backpanel, 50-trace I/O male card edge
SCMD-PB16TSM	16-Ch Backpanel, screw terminal input and output
SCMD-PB24SM	24-Ch Backpanel, 50-trace I/O male card edge
SCMD-PB4D	4-Ch Backpanel, Full Size & Miniature, DIN Rail Mount
SCMD-PB4RD	4-Ch Backpanel, Full Size & Miniature, Output Only, DIN Rail Mount
SCMD-PB8SMD	8-Ch Backpanel, 50-trace I/O male card edge, DIN Rail Mount
SCMD-PB16SMD	16-Ch Backpanel, 50-trace I/O male card edge, DIN Rail Mount
SCMD-PB16TSMD	16-Ch Backpanel, screw terminal input and output, DIN Rail Mount
SCMD-PB24SMD	24-Ch Backpanel, 50-trace I/O male card edge, DIN Rail Mount

Jumpers (Connect common terminals on backpanels)

Model	Description
SCMD-JM8	Miniature, 8-position

Connectors

Mating connector for 50-trace I/O male card edge

Part Number	Manufacturer
66317-150	FCI-Berg
3415-0001	3M

Features

- Plug-Compatible Logic Connections on 8-, 16- and 24-Position Backpanels, Screw Terminal Barrier Block for Logic Connections on 4-Position Backpanels
- Screw Terminal Barrier Block for Load Connections
- Resident Pull-Up Resistors
- 5 Amp Field-Replaceable Fuses (Littelfuse #251005 or Equivalent)
- LEDs Indicate Logic Status
- All Even-Numbered Logic Connections are Logic Ground
- Input and Output Modules Accepted Interchangeably
- Operate with 5 or 24 Volt Logic Supplies
- Plastic Captive-Screw Retaining System for All Modules
- PB4, PB4R, PB8SM, PB16SM, PB16TSM, and PB24SM, UL Listed, CSA Certified and CE Compliant

***For technical details and drawings, go to www.dataforth.com/scmd.aspx**

©1995-2017 Dataforth Corporation, All Rights Reserved ISO9001:2008-Registered QMS

DSCA

High Performance DIN Isolated Analog Signal Conditioners

Description

Each Instrument-Class® DSCA module provides a single channel of isolated analog input or output. Input modules accept analog voltage or current signals from all types of field sensors and sources and filter, isolate, amplify, linearize, and convert these input signals to high-level analog outputs suitable for use in data acquisition, test and measurement, and control system applications. Output modules accept high-level analog voltage signals from a system, then buffer, isolate, filter, and amplify them before providing a current or voltage output to a field device.



Features

- ±0.03% Accuracy (Typical)
- ±0.01% Linearity
- 1500Vrms Transformer Isolation & 240Vrms Field-side Protection
- ANSI/IEEE C37.90.1 Transient Protection
- True 3-Way Isolation
- Wide Supply Voltage, 15 to 30VDC
- Industry Standard Output of 0 to +10V, ±10V, 0 to 20mA, or 4 to 20mA
- 4- to 6-Pole Low-Pass Filtering
- Up to 160dB CMR
- 85dB NMR at 60Hz, 80dB at 50Hz
- –40°C to +80°C Operating Temperature
- Screw Terminals and Plug-in Terminal Blocks Simplify Wiring and Maintenance
- C-UL-US Listed (Class I, Division 2, Groups A, B, C, D)
- CE and ATEX Compliant
- Manufactured per RoHS II Directive 2011/65/EU

DSCA Selection Guide

ANALOG VOLTAGE INPUT MODULES, 3Hz BW **Page 204**

MODEL	INPUT RANGE	OUTPUT RANGE†
DSCA30-01	–10mV to +10mV	1
DSCA30-02	–50mV to +50mV	1
DSCA30-03	–100mV to +100mV	1
DSCA30-04	–10mV to +10mV	2, 3, 4
DSCA30-05	–50mV to +50mV	2, 3, 4
DSCA30-06	–100mV to +100mV	2, 3, 4
DSCA30-07	0 to +10mV	2, 3, 4
DSCA30-08	0 to +50mV	2, 3, 4
DSCA30-09	0 to +100mV	2, 3, 4
DSCA31-01	–1V to +1V	1
DSCA31-02	–5V to +5V	1
DSCA31-03	–10V to +10V	1
DSCA31-04	–1V to +1V	2, 3, 4
DSCA31-05	–5V to +5V	2, 3, 4
DSCA31-06	–10V to +10V	2, 3, 4
DSCA31-07	–20V to +20V	1
DSCA31-08	–20V to +20V	2, 3, 4
DSCA31-09	–40V to +40V	1
DSCA31-10	–40V to +40V	2, 3, 4
DSCA31-11	0 to +1V	2, 3, 4
DSCA31-12	0 to +5V	2, 3, 4
DSCA31-13	0 to +10V	2, 3, 4
DSCA31-14	0 to +20V	2, 3, 4
DSCA31-15	0 to +40V	2, 3, 4

ANALOG CURRENT INPUT MODULES **Page 206**

MODEL	INPUT RANGE	OUTPUT RANGE†
DSCA32-01	4mA to 20mA	2, 3, 4
DSCA32-02	0mA to 20mA	2, 3, 4
DSCA32-03	–20mA to 20mA	1

ISOLATED TRUE RMS INPUT MODULES **Page 208**

MODEL	INPUT RANGE (rms)	OUTPUT RANGE (dc)†
DSCA33-01	0 to 100mV	2, 3, 4, 5, 6
DSCA33-02	0 to 1V	2, 3, 4, 5, 6
DSCA33-03	0 to 10V	2, 3, 4, 5, 6
DSCA33-04	0 to 150V	2, 3, 4, 5, 6
DSCA33-05	0 to 300V	2, 3, 4, 5, 6
DSCA33-06	0 to 1A	2, 3, 4, 5, 6
DSCA33-07	0 to 5A	2, 3, 4, 5, 6

LINEARIZED 2- or 3-WIRE RTD INPUT MODULES **Page 210**

MODEL	INPUT RANGE	OUTPUT RANGE†
100Ω Pt **		
DSCA34-01	–100°C to +100°C (–148°F to +212°F)	2, 3, 4
DSCA34-02	0°C to +100°C (+32°F to +212°F)	2, 3, 4
DSCA34-03	0°C to +200°C (+32°F to +392°F)	2, 3, 4
DSCA34-04	0°C to +600°C (+32°F to +1112°F)	2, 3, 4
DSCA34-05	–50°C to +350°C (–58°F to +662°F)	2, 3, 4
120Ω Ni **		
DSCA34N-01	0°C to +300°C (+32°F to +572°F)	2, 3, 4

©1995-2017 Dataforth Corporation, All Rights Reserved ISO9001:2008-Registered QMS

DSCA Selection Guide (Continued)

POTENTIOMETER INPUT MODULES Page 212

MODEL	INPUT RANGE	OUTPUT RANGE†
DSCA36-01	100Ω	2, 3, 4
DSCA36-02	500Ω	2, 3, 4
DSCA36-03	1kΩ	2, 3, 4
DSCA36-04	10kΩ	2, 3, 4

THERMOCOUPLE INPUT MODULES Page 214

MODEL	TYPE‡	INPUT RANGE	OUTPUT RANGE†
DSCA37J-01	J	–100°C to +760°C (–148°F to +1400°F)	2, 3, 4
DSCA37K-02	K	–100°C to +1350°C (–148°F to +2462°F)	2, 3, 4
DSCA37T-03	T	–100°C to +400°C (–148°F to +752°F)	2, 3, 4
DSCA37E-04	E	0°C to +900°C (+32°F to +1652°F)	2, 3, 4
DSCA37R-05	R	0°C to +1750°C (+32°F to +3182°F)	2, 3, 4
DSCA37S-06	S	0°C to +1750°C (+32°F to +3182°F)	2, 3, 4
DSCA37B-07	B	0°C to +1800°C (+32°F to +3272°F)	2, 3, 4
DSCA37N-08	N	–100°C to +1300°C (–148°F to +2372°F)	2, 3, 4

STRAIN GAGE INPUT MODULES Page 216

MODEL	INPUT	EXCITATION	OUTPUT RANGE†
DSCA38-01	±10mV Full Bridge Input, (3mV/V)	+3.333V	1
DSCA38-02	±30mV Full Bridge Input, (3mV/V)	+10.0V	1
DSCA38-03	±10mV Half Bridge Input, (3mV/V)	+3.333V	1
DSCA38-04	±30mV Half Bridge Input, (3mV/V)	+10.0V	1
DSCA38-05	±20mV Full Bridge Input, (2mV/V)	+10.0V	1
DSCA38-06	±33.3mV Full Bridge Input, (10mV/V)	+3.333V	1
DSCA38-07	±100mV Full Bridge Input, (10mV/V)	+10.0V	1
DSCA38-08	±10mV Full Bridge Input, (3mV/V)	+3.333V	2, 3, 4
DSCA38-09	±30mV Full Bridge Input, (3mV/V)	+10.0V	2, 3, 4
DSCA38-10	±10mV Half Bridge Input, (3mV/V)	+3.333V	2, 3, 4
DSCA38-11	±30mV Half Bridge Input, (3mV/V)	+10.0V	2, 3, 4
DSCA38-12	±20mV Full Bridge Input, (2mV/V)	+10.0V	2, 3, 4
DSCA38-13	±33.3mV Full Bridge Input, (10mV/V)	+3.333V	2, 3, 4
DSCA38-14	±100mV Full Bridge Input, (10mV/V)	+10.0V	2, 3, 4
DSCA38-15	0 to +10mV Full Bridge Input, (3mV/V)	+3.333V	2, 3, 4
DSCA38-16	0 to +30mV Full Bridge Input, (3mV/V)	+10.0V	2, 3, 4
DSCA38-17	0 to +10mV Half Bridge Input, (3mV/V)	+3.333V	2, 3, 4
DSCA38-18	0 to +30mV Half Bridge Input, (3mV/V)	+10.0V	2, 3, 4
DSCA38-19	0 to +20mV Full Bridge Input, (2mV/V)	+10.0V	2, 3, 4
DSCA38-20	0 to +33.3mV Full Bridge Input, (10mV/V)	+3.333V	2, 3, 4
DSCA38-21	0 to +100mV Full Bridge Input, (10mV/V)	+10.0V	2, 3, 4

CURRENT OUTPUT MODULES Page 218

MODEL	INPUT RANGE	OUTPUT RANGE
DSCA39-01	0V to +10V	4mA to 20mA
DSCA39-02	–10V to +10V	4mA to 20mA
DSCA39-03	0V to +10V	0mA to 20mA
DSCA39-04	–10V to +10V	0mA to 20mA
DSCA39-05	0mA to 20mA	0mA to 20mA
DSCA39-07	–10V to +10V	-20mA to +20mA

ANALOG VOLTAGE INPUT MODULES, 3kHz BW Page 220

MODEL	INPUT RANGE	OUTPUT RANGE†
DSCA40-01	–10mV to +10mV	1
DSCA40-02	–50mV to +50mV	1
DSCA40-03	–100mV to +100mV	1
DSCA40-04	–10mV to +10mV	2, 3, 4
DSCA40-05	–50mV to +50mV	2, 3, 4
DSCA40-06	–100mV to +100mV	2, 3, 4
DSCA40-07	0 to +10mV	2, 3, 4
DSCA40-08	0 to + 50mV	2, 3, 4
DSCA40-09	0 to +100mV	2, 3, 4
DSCA41-01	–1V to +1V	1
DSCA41-02	–5V to +5V	1
DSCA41-03	–10V to +10V	1
DSCA41-04	–1V to +1V	2, 3, 4
DSCA41-05	–5V to +5V	2, 3, 4
DSCA41-06	–10V to +10V	2, 3, 4
DSCA41-07	–20V to +20V	1
DSCA41-08	–20V to +20V	2, 3, 4
DSCA41-09	–40V to +40V	1
DSCA41-10	–40V to +40V	2, 3, 4
DSCA41-11	0 to +1V	2, 3, 4
DSCA41-12	0 to +5 V	2, 3, 4
DSCA41-13	0 to +10V	2, 3, 4
DSCA41-14	0 to +20V	2, 3, 4
DSCA41-15	0 to +40V	2, 3, 4

2-WIRE TRANSMITTER INTERFACE MODULES Page 222

MODEL	INPUT RANGE	OUTPUT RANGE†
DSCA42-01	4mA to 20mA	0V to +10V & 3, 4
DSCA42-02	4mA to 20mA 2	V to +10V

GENERAL PURPOSE INPUT MODULES, DC EXCITATION Page 224

MODEL	INPUT RANGE	OUTPUT RANGE†
DSCA43-01	–1V to +1V	1
DSCA43-02	–2V to +2V	1
DSCA43-03	–3V to +3V	1
DSCA43-04	–4V to +4V	1
DSCA43-05	–5V to +5V	1
DSCA43-06	–6V to +6V	1
DSCA43-07	–7V to +7V	1
DSCA43-08	–8V to +8V	1
DSCA43-09	–9V to +9V	1
DSCA43-10	–10V to +10V	1
DSCA43-11	–1V to +1V	2, 3, 4
DSCA43-12	–2V to +2V	2, 3, 4
DSCA43-13	–3V to +3V	2, 3, 4
DSCA43-14	–4V to +4V	2, 3, 4
DSCA43-15	–5V to +5V	2, 3, 4
DSCA43-16	–6V to +6V	2, 3, 4
DSCA43-17	–7V to +7V	2, 3, 4
DSCA43-18	–8V to +8V	2, 3, 4
DSCA43-19	–9V to +9V	2, 3, 4
DSCA43-20	–10V to +10V	2, 3, 4

©1995-2017 Dataforth Corporation, All Rights Reserved ISO9001:2008-Registered QMS

DSCA Selection Guide (Continued)

FREQUENCY INPUT MODULES Page 226

MODEL	INPUT RANGE	OUTPUT RANGE†
DSCA45-01	0 to 500Hz	2, 3, 4
DSCA45-02	0 to 1kHz	2, 3, 4
DSCA45-03	0 to 2.5kHz	2, 3, 4
DSCA45-04	0 to 5kHz	2, 3, 4
DSCA45-05	0 to 10kHz	2, 3, 4
DSCA45-06	0 to 25kHz	2, 3, 4
DSCA45-07	0 to 50kHz	2, 3, 4
DSCA45-08	0 to 100kHz	2, 3, 4

LINEARIZED THERMOCOUPLE INPUT MODULES Page 228

MODEL	TYPE‡	INPUT RANGE	OUTPUT RANGE†
DSCA47J-01	J	0°C to +760°C (+32°F to +1400°F)	2, 3, 4
DSCA47J-02	J	–100°C to +300°C (–148°F to +572°F)	2, 3, 4
DSCA47J-03	J	0°C to +500°C (+32°F to +932°F)	2, 3, 4
DSCA47K-04	K	0°C to +1000°C (+32°F to +1832°F)	2, 3, 4
DSCA47K-05	K	0°C to +500°C (+32°F to +932°F)	2, 3, 4
DSCA47K-13	K	–100°C to +1350°C (–148°F to +2462°F)	2, 3, 4
DSCA47K-14	K	0°C to +1200°C (+32°F to +2192°F)	2, 3, 4
DSCA47T-06	T	–100°C to +400°C (–148°F to +752°F)	2, 3, 4
DSCA47T-07	T	0°C to +200°C (+32°F to +392°F)	2, 3, 4
DSCA47E-08	E	0°C to +1000°C (+32°F to +1832°F)	2, 3, 4
DSCA47R-09	R	+500°C to +1750°C (+932°F to +3182°F)	2, 3, 4
DSCA47S-10	S	+500°C to +1750°C (+932°F to +3182°F)	2, 3, 4
DSCA47B-11	B	+500°C to +1800°C (+932°F to +3272°F)	2, 3, 4
DSCA47N-15	N	–100°C to +1300°C (–148°F to +2372°F)	2, 3, 4

VOLTAGE OUTPUT MODULES Page 230

MODEL	INPUT RANGE	OUTPUT RANGE
DSCA49-04	0V to +10V	–10V to +10V
DSCA49-05	–10V to +10V	–10V to +10V
DSCA49-06	–10V to +10V	0V to +10V

POWER SUPPLIES Page 232

PWR-PS5R7W	Power Supply, 24V, 0.3A, 100-240VAC Input
PWR-PS5R15W	Power Supply, 24V, 0.65A, 100-240VAC Input
PWR-PS5R30W	Power Supply, 24V, 1.3A, 100-240VAC Input
PWR-PS5R60W	Power Supply, 24V, 2.5A, 100-240VAC Input
PWR-PS5R120W	Power Supply, 24V, 5.0A, 100-240VAC Input

ACCESSORIES Page 233

SCMXRAIL1-XX	DIN EN 50022-35 x 7.5 (slotted steel), length -xx, in meters
SCMXRAIL3-XX	DIN EN 50022-35 x 15 (slotted steel), length -xx, in meters

† OUTPUT RANGES AVAILABLE

Output Range	Part No. Suffix	Example
1. –10V to +10V	None	DSCA30-01
2. 0V to +10V	None	DSCA30-04
3. 4 to 20mA	C	DSCA30-01C
4. 0 to 20mA	E	DSCA30-04E
5. 0 to +5V	A	DSCA33-01A
6. 0 to 1mA	B	DSCA33-01B

‡THERMOCOUPLE ALLOY COMBINATIONS

Standards: DIN IEC 584, ANSI MC96-1-82, JIS C 1602-1981

TYPE	MATERIAL
J	Iron vs. Copper-Nickel
K	Nickel-Chromium vs. Nickel-Aluminum
T	Copper vs. Copper-Nickel
E	Nickel-Chromium vs. Copper-Nickel
R	Platinum-13% Rhodium vs. Platinum
S	Platinum-10% Rhodium vs. Platinum
B	Platinum-30% Rhodium vs. Platinum-6% Rhodium
N	Nickel-14.2% Chromium-1.4% Silicon vs. Nickel-4.4% Silicon- 0.1% Magnesium

****RTD STANDARDS**

TYPE	ALPHA COEFFICIENT	DIN	JIS	IEC
100Ω Pt	0.00385	DIN 43760	JIS C 1604-1989	IEC 751
120Ω Ni	0.00672			

Installation Notes:

1.) This Equipment is Suitable for Use in Class I, Division 2, Groups A, B,C, D, or Non-Hazardous Locations Only.

2.) WARNING - Explosion Hazard - Substitution of Components May Impair Suitability for Class I, Division 2.

3.) WARNING - Explosion Hazard - Do Not Disconnect Equipment Unless Power Has Been Switched Off or The Area is Known to be Non-Hazardous.

4.) The Power to These Devices Shall Be Limited By an Over-Current Protection Device, UL Certified Fuse (JDYX/JDYX2) Rated 6A Max.

©1995-2017 Dataforth Corporation, All Rights Reserved ISO9001:2008-Registered QMS

DSCA30/31

Analog Voltage Input Signal Conditioners, Narrow Bandwidth

Description

Each DSCA30/31 voltage input module provides a single channel of analog input which is filtered, isolated, amplified, and converted to a high-level voltage output (Figure 1). Signal filtering is accomplished with a five-pole filter which provides 85dB of normal-mode rejection at 60Hz and 80dB at 50Hz. An anti-aliasing pole is located on the field side of the isolation barrier, and the other four poles are on the system side. After the initial field-side filtering, the input signal is chopped by a proprietary chopper circuit. Isolation is provided by transformer coupling, again using a proprietary technique to suppress transmission of common mode spikes or surges.

Module output is either voltage or current. For current output models a dedicated loop supply is provided at terminal 3 (+OUT) with loop return located at terminal 4 (-OUT). The system-side load may be either floating or grounded.

Special input circuits provide protection against accidental connection of power-line voltages up to 240VAC and against transient events as defined by ANSI/IEEE C37.90.1. Protection circuits are also present on the signal output and power input terminals to guard against transient events and power reversal. Signal and power lines are secured to the module using screw terminals which are in pluggable terminal blocks for ease of system assembly and reconfiguration.

The modules have excellent stability over time and do not require recalibration, however, zero and span settings are adjustable up to ±5% to accommodate situations where fine-tuning is desired. The adjustments are made using potentiometers located under the front panel label and are non-interactive for ease of use.

Features

- Accepts Millivolt and Voltage Level Signals
- Industry Standard Output of 0 to +10V, ±10V, 0 to 20mA, or 4 to 20mA
- 1500Vrms Transformer Isolation
- ANSI/IEEE C37.90.1 Transient Protection
- Input Protected to 240VAC Continuous
- True 3-Way Isolation
- Wide Range of Supply Voltage
- 160dB CMR
- 85dB NMR at 60Hz, 80dB at 50Hz
- ±0.03% Accuracy
- ±0.01% Linearity
- Easily Mounts on Standard DIN Rail
- C-UL-US Listed
- CE and ATEX Compliant

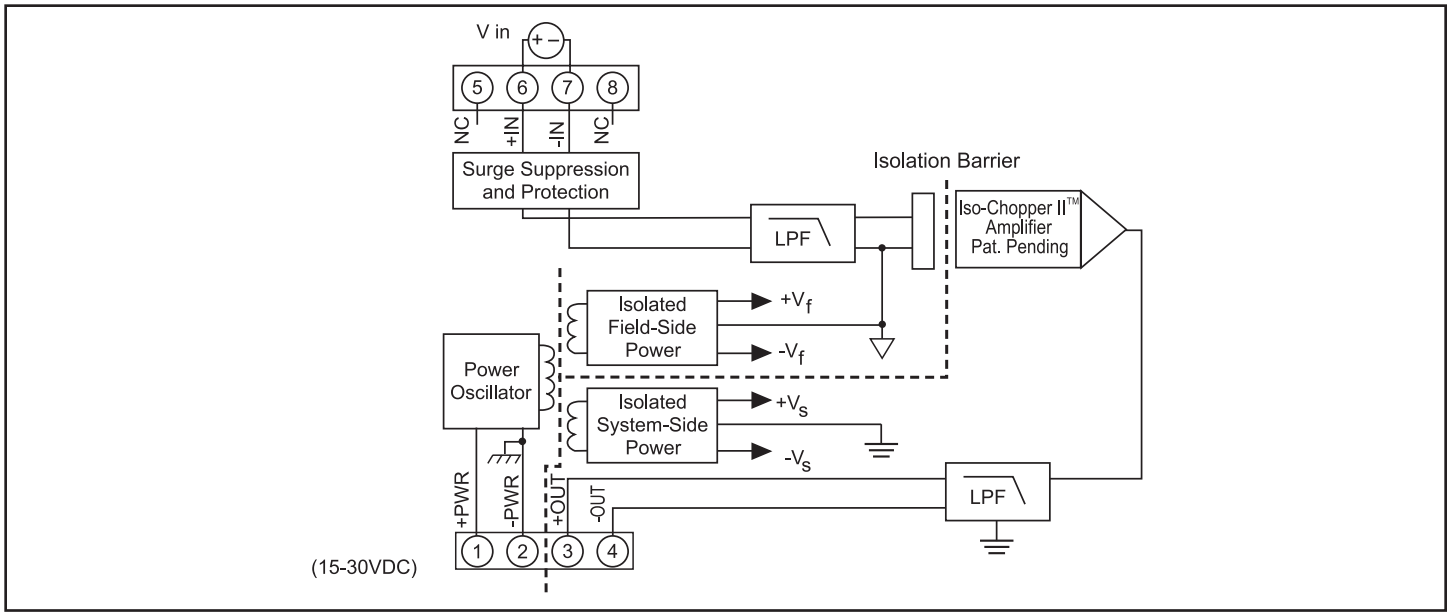

Figure 1: DSCA30/31 Block Diagram

©1995-2017 Dataforth Corporation, All Rights Reserved ISO9001:2008-Registered QMS

Specifications

Typical* at T_A = +25°C and +24VDC supply voltage

Module	DSCA30	DSCA31
Input Range	±10mV to ±100mV	±1V to ±40V
Input Bias Current	±0.5nA	±0.05nA
Input Resistance		
Normal	50MΩ	500kΩ min
Power Off	65kΩ	500kΩ min
Overload	65kΩ	500kΩ min
Input Protection		
Continuous	240Vrms max	*
Transient	ANSI/IEEE C37.90.1	*
Output Range	See Ordering Information	
Load Resistance (I_{OUT})	600Ω max	*
Current Limit	8mA (V_{OUT}), 30mA (I_{OUT})	*
Output Protection		
Short to Ground	Continuous	*
Transient	ANSI/IEEE C37.90.1	*
CMV, Input to Output, Input to Power		
Continuous	1500Vrms max	*
Transient	ANSI/IEEE C37.90.1	*
CMV, Output to Power		
Continuous	50VDC max	*
CMR (50Hz or 60Hz)	160dB	*
Accuracy(1)	±0.03% Span	*
Linearity	±0.01% Span	*
Adjustability	±5% Zero and Span	*
Stability		
Input Offset	±0.5µV/°C	±5µV/°C
Output Offset	±6ppm/°C (V_{OUT}), ±20ppm/°C (I_{OUT})	*
Zero Suppression	±50ppm(V_z)(2)/°C	*
Gain	±35ppm/°C	±55ppm/°C
Output Noise, 100kHz BW	250µVrms (V_{OUT}), 1µArms (I_{OUT})	*
Bandwidth, –3dB	3Hz	*
NMR	85dB at 60Hz, 80dB at 50Hz	*
Response Time, 90% Span	165ms	*
Power Supply		
Voltage	15 to 30VDC	*
Current	25mA (V_{OUT}), 55mA (I_{OUT})	*
Sensitivity	±0.0001%/%	*
Protection		
Reverse Polarity	Continuous	*
Transient	ANSI/IEEE C37.90.1	*
Mechanical Dimensions (h)(w)(d)	2.95" x 0.89" x 4.13" (75mm x 22.5mm x 105mm)	*
Mounting	DIN EN 50022 -35x7.5 or -35x15 rail	*
Environmental		
Operating Temp. Range	–40°C to +80°C	*
Storage Temp. Range	–40°C to +80°C	*
Relative Humidity	0 to 95% Noncondensing	*
Emissions EN61000-6-4	ISM, Group 1	*
Radiated, Conducted	Class A	*
Immunity EN61000-6-2	ISM, Group 1	*
RF	Performance A ±0.5% Span Error	*
ESD,EFT	Performance B	*

NOTES:
*Contact factory or your local Dataforth sales office for maximum values.
* Same specification as DSCA30.
(1) Includes linearity, hysteresis and repeatability.
(2) V_z is the nominal input voltage that results in 0V or 0mA output.

Ordering Information

Model	Input Range	Output Range †
DSCA30-01	–10mV to +10mV	1
DSCA30-02	–50mV to +50mV	1
DSCA30-03	–100mV to +100mV	1
DSCA30-04	–10mV to +10mV	2, 3, 4
DSCA30-05	–50mV to +50mV	2, 3, 4
DSCA30-06	–100mV to +100mV	2, 3, 4
DSCA30-07	0 to +10mV	2, 3, 4
DSCA30-08	0 to +50mV	2, 3, 4
DSCA30-09	0 to +100mV	2, 3, 4
DSCA31-01	–1V to +1V	1
DSCA31-02	–5V to +5V	1
DSCA31-03	–10V to +10V	1
DSCA31-04	–1V to +1V	2, 3, 4
DSCA31-05	–5V to +5V	2, 3, 4
DSCA31-06	–10V to +10V	2, 3, 4
DSCA31-07	–20V to +20V	1
DSCA31-08	–20V to +20V	2, 3, 4
DSCA31-09	–40V to +40V	1
DSCA31-10	–40V to +40V	2, 3, 4
DSCA31-11	0 to +1V	2, 3, 4
DSCA31-12	0 to +5V	2, 3, 4
DSCA31-13	0 to +10V	2, 3, 4
DSCA31-14	0 to +20V	2, 3, 4
DSCA31-15	0 to +40V	2, 3, 4

†Output Ranges Available

Output Range	Part No. Suffix	Example
1. –10V to +10V	NONE	DSCA30-01
2. 0V to +10V	NONE	DSCA30-04
3. 4 to 20mA	C	DSCA30-04C
4. 0 to 20mA	E	DSCA30-04E

Installation Notes:

1.) This Equipment is Suitable for Use in Class I, Division 2, Groups A, B,C, D, or Non-Hazardous Locations Only.

2.) WARNING - Explosion Hazard - Substitution of Components May Impair Suitability for Class I, Division 2.

3.) WARNING - Explosion Hazard - Do Not Disconnect Equipment Unless Power Has Been Switched Off or The Area is Known to be Non-Hazardous.

4.) The Power to These Devices Shall Be Limited By an Over-Current Protection Device, UL Certified Fuse (JDYX/JDYX2) Rated 6A Max.

©1995-2017 Dataforth Corporation, All Rights Reserved ISO9001:2008-Registered QMS

DSCA32

Analog Current Input Signal Conditioners

Description

Each DSCA32 current input module provides a single channel of analog input which is filtered, isolated, amplified, and converted to a high-level voltage output (Figure 1). Signal filtering is accomplished with a five-pole filter which is optimized for step response. An anti-aliasing pole is located on the field side of the isolation barrier, and the other four poles are on the system side. After the initial field-side filtering, the input signal is chopped by a proprietary chopper circuit. Isolation is provided by transformer coupling, again using a proprietary technique to suppress transmission of common mode spikes or surges.

Module output is either voltage or current. For current output models a dedicated loop supply is provided at terminal 3 (+OUT) with loop return located at terminal 4 (-OUT). The system-side load may be either floating or grounded.

Special input circuits provide protection against accidental connection of power-line voltages up to 240VAC and against transient events as defined by ANSI/IEEE C37.90.1. Protection circuits are also present on the signal output and power input terminals to guard against transient events and power reversal. Signal and power lines are secured to the module using screw terminals which are in pluggable terminal blocks for ease of system assembly and reconfiguration.

The modules have excellent stability over time and do not require recalibration, however, zero and span settings are adjustable up to ±5% to accommodate situations where fine-tuning is desired. The adjustments are made using potentiometers located under the front panel label and are non-interactive for ease of use.

Features

- Accepts Milliamp Level Signals
- Industry Standard Output of 0 to +10V, 0 to 20mA, or 4 to 20mA
- 1500Vrms Transformer Isolation
- ANSI/IEEE C37.90.1 Transient Protection
- Input Protected to 240VAC Continuous
- True 3-Way Isolation
- Wide Range of Supply Voltage
- 105dB CMR
- 5 Poles of Filtering
- ±0.03% Accuracy
- ±0.01% Linearity
- Easily Mounts on Standard DIN Rail
- C-UL-US Listed
- CE and ATEX Compliant

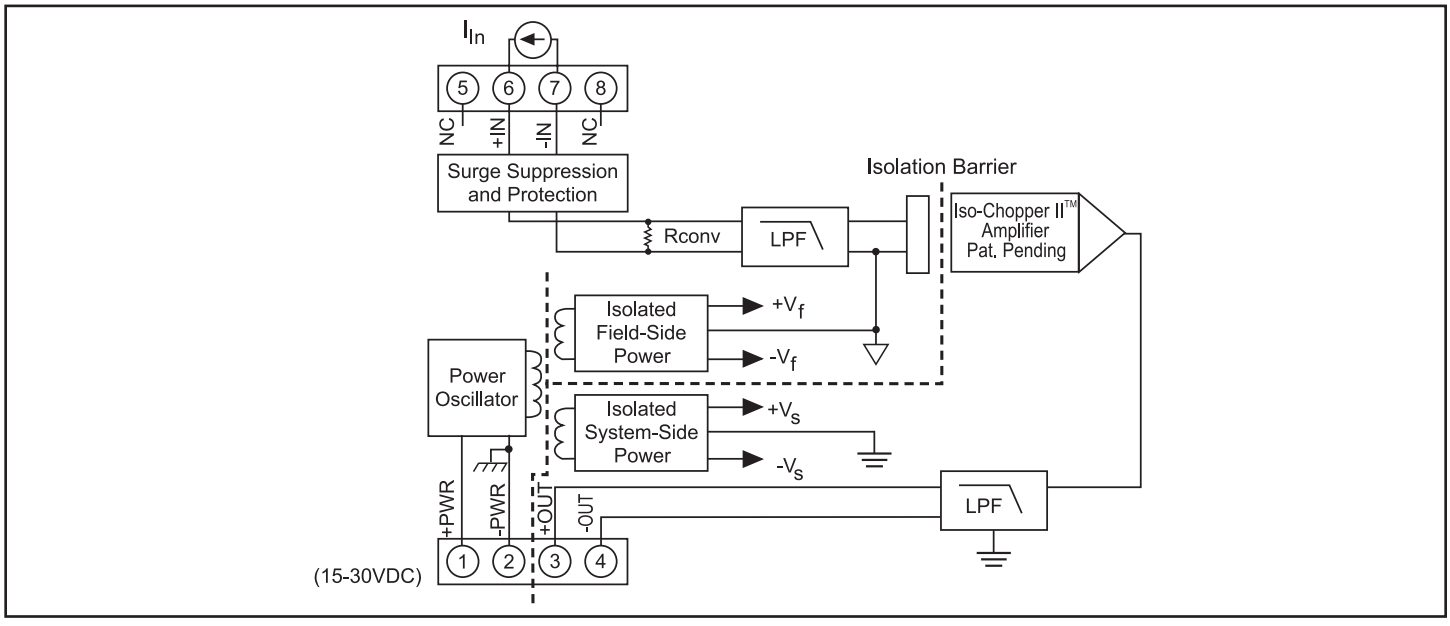

Figure 1: DSCA32 Block Diagram

©1995-2017 Dataforth Corporation, All Rights Reserved ISO9001:2008-Registered QMS

Specifications

Typical* at T_A = +25°C and +24VDC supply voltage

Module	DSCA32
Input Range	0-20mA or 4-20mA
Input Resistance	
Normal	<100Ω
Power Off	<100Ω
Overload	65kΩ
Input Protection	
Continuous	240Vrms max
Transient	ANSI/IEEE C37.90.1
Output Range	See Ordering Information
Load Resistance (I_{OUT})	600Ω max
Current Limit	8mA (V_{OUT}), 30mA (I_{OUT})
Output Protection	
Short to Ground	Continuous
Transient	ANSI/IEEE C37.90.1
CMV, Input to Output, Input to Power	
Continuous	1500Vrms max
Transient	ANSI/IEEE C37.90.1
CMV, Output to Power	
Continuous	50VDC max
CMR (50Hz or 60Hz)	105dB
Accuracy(1)	±0.03% Span
Linearity	±0.01% Span
Adjustability	±5% Zero and Span
Stability	
Offset	±6ppm/°C (V_{OUT}), ±20ppm/°C (I_{OUT})
Gain	±40ppm/°C
Output Noise, 100kHz Bandwidth	300µVrms (V_{OUT}), 1µArms (I_{OUT})
Bandwidth, –3dB	100Hz
NMR (–3dB at 100Hz)	100dB per Decade above 100Hz
Response Time, 90% Span	5ms
Power Supply	
Voltage	15 to 30VDC
Current	25mA (V_{OUT}), 55mA (I_{OUT})
Sensitivity	±0.0001%/%
Protection	
Reverse Polarity	Continuous
Transient	ANSI/IEEE C37.90.1
Mechanical Dimensions (h)(w)(d)	2.95" x 0.89" x 4.13" (75mm x 22.5mm x 105mm)
Mounting	DIN EN 50022 -35x7.5 or -35x15 rail
Environmental	
Operating Temperature Range	–40°C to +80°C
Storage Temperature Range	–40°C to +80°C
Relative Humidity	0 to 95% Noncondensing
Emissions EN61000-6-4	ISM, Group 1
Radiated, Conducted	Class A
Immunity EN61000-6-2	ISM, Group 1
RF	Performance A ±0.5% Span Error
ESD, EFT	Performance B

NOTES:
*Contact factory or your local Dataforth sales office for maximum values.
(1) Includes linearity, hysteresis and repeatability.

Ordering Information

Model	Input Range	Output Range †
DSCA32-01	4mA to 20mA	2, 3, 4
DSCA32-02	0mA to 20mA	2, 3, 4
DSCA32-03	±20mA	1

†Output Ranges Available

Output Range	Part No. Suffix	Example
1. –10V to +10V	NONE	DSCA32-03
2. 0V to +10V	NONE	DSCA32-01
3. 4 to 20mA	C	DSCA32-01C
4. 0 to 20mA	E	DSCA32-01E

Installation Notes:

1.) This Equipment is Suitable for Use in Class I, Division 2, Groups A, B,C, D, or Non-Hazardous Locations Only.

2.) WARNING - Explosion Hazard - Substitution of Components May Impair Suitability for Class I, Division 2.

3.) WARNING - Explosion Hazard - Do Not Disconnect Equipment Unless Power Has Been Switched Off or The Area is Known to be Non-Hazardous.

4.) The Power to These Devices Shall Be Limited By an Over-Current Protection Device, UL Certified Fuse (JDYX/JDYX2) Rated 6A Max.

©1995-2017 Dataforth Corporation, All Rights Reserved ISO9001:2008-Registered QMS

DSCA33

Isolated True RMS Input Signal Conditioners

Description

Each DSCA33 True RMS input module provides a single channel of AC input which is converted to its True RMS DC value, filtered, isolated, amplified, and converted to standard process voltage or current output (Figure 1).

The field voltage or current input signal is processed through an AC coupled pre-amplifier and RMS converter on the field side of the isolation barrier. The converted dc signal is then filtered and chopped by a proprietary chopper circuit and transferred across the transformer isolation barrier, suppressing transmission of common mode spikes and surges. The computer side circuitry reconstructs, filters and converts the signal to industry standard outputs.

Module output is either voltage or current. For current output models a dedicated loop supply is provided at terminal 3 (+OUT) with loop return located at terminal 4 (-OUT). The system-side load may be either floating or grounded.

Special input circuits provide protection against accidental connection of power-line voltages up to 480VAC and against transient events as defined by ANSI/IEEE C37.90.1. Protection circuits are also present on the signal output and power input terminals to guard against transient events and power reversal. Signal and power lines are secured to the module using screw terminals which are pluggable terminal blocks for ease of system assembly and reconfiguration.

DSCA33 modules have excellent stability over time and do not require recalibration, however, both zero and span settings are adjustable to accommodate situations where fine tuning is desired. The adjustments are made using potentiometers located under the front panel label and are non-interactive for ease of use.

Due to circuit limitations, DSCA33-04x and -05x are not ATEX compliant.

Features

- Interfaces RMS Voltage (0 – 300V) or RMS Current (0 – 5A)
- Designed for Standard Operation with Frequencies of 45Hz to 1000Hz (Extended Range Operation to 20kHz)
- Compatible with Standard Current and Potential Transformers
- Industry Standard Output of 0 to 1mA, 0 to 20mA, 4 to 20mA, 0 to +5V, or 0 to +10V
- ±0.25% Factory Calibrated Accuracy (Accuracy Class 0.2)
- ±5% Adjustable Zero and Span
- 1500Vrms Transformer Isolation
- Input Overload Protected to 480V (Peak AC & DC) or 10Arms Continuous
- 100dB CMR
- ANSI/IEEE C37.90.1 Transient Protection
- Easily Mounts on Standard DIN Rail
- C-UL-US Listed and CE Compliant
- ATEX Compliant (all models except DSCA33-04x, -05x)

WARNING: The DSCA33 interfaces to hazardous voltages and should only be wired by qualified personnel or licensed electricians.

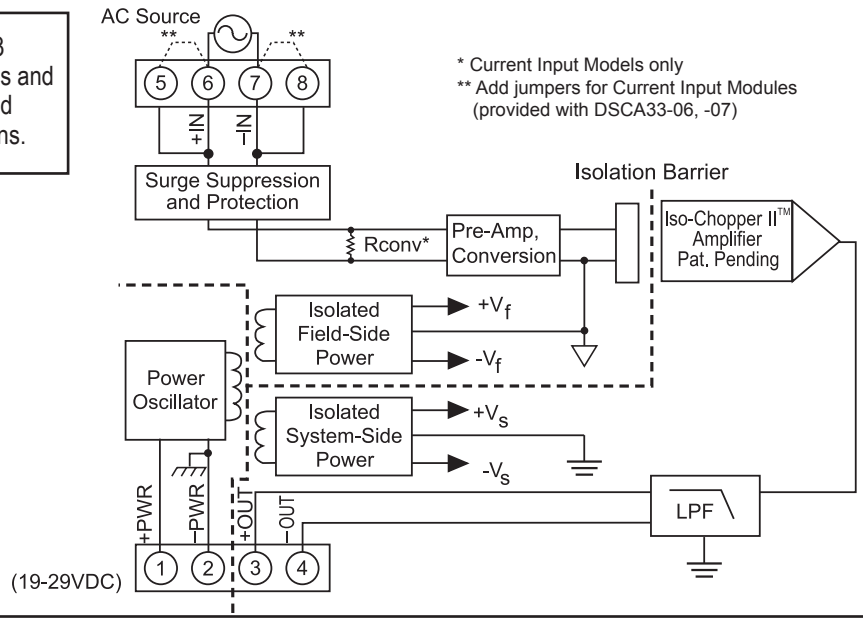

Figure 1: DSCA33 Block Diagram

©1995-2017 Dataforth Corporation, All Rights Reserved ISO9001:2008-Registered QMS

Specifications

Typical* at T_A = +25°C and +24VDC supply voltage

Module	DSCA33
Input	
Signal Range	100mV to 300Vrms, 0 to 5Arms
Standard Frequency Range	45Hz to 1000Hz
Extended Frequency Range	1kHz to 20kHz
Impedance	499KΩ // <100pF (-01 thru -05), 0.10Ω (-06), 0.025Ω (-07)
Coupling	AC
Protection	
Continuous (-01 thru -05)	350Vrms
Continuous (-06 thru -07)	5Arms (-06), 10Arms (-07) max
Transient (-01 thru -05)	ANSI/IEEE C37.90.1
Transient (-06 thru -07)	See note 1
Output	
Signal Range	See Ordering Information
Adjustability	±5% Zero & Span
Load Resistance	10kΩ max. (0-1mA models), 600Ω max. (0/4-20mA models)
Current Limit	1.4mA (0-1mA models), 30mA (0/4-20mA models), 8mA (0-5/10V models)
Protection	
Short to Ground	Continuous
Transient	ANSI/IEEE C37.90.1
Ripple and Noise	<0.025% Span rms
Accuracy (10-100% Span)(2) (3)	
Sinusoid	
50/60Hz	±0.25% Span
45Hz-1kHz	±0.25% Reading Additional Error
1kHz-20kHz	±0.75% Reading Additional Error
Non-Sinusoid	
Crest Factor = 1 to 2	±0.05% Reading Additional Error
Crest Factor = 2 to 3	±0.15% Reading Additional Error
Crest Factor = 3 to 4	±0.30% Reading Additional Error
Crest Factor = 4 to 5	±0.40% Reading Additional Error
Vs. Temperature	±100ppm/°C
Isolation (Common Mode)	
Input to Output, Input to Power	
Continuous	1500Vrms max
Transient	ANSI/IEEE C37.90.1
Output to Power	
Continuous	50VDC max
Response Time (0 to 99%)	<400ms
CMR (50 or 60Hz)	100dB
Power Supply	
Voltage	19 to 29VDC
Current	45mA (V_{OUT}), 65mA (I_{OUT})
Sensitivity	±0.0002%/%
Protection	
Reverse Polarity	Continuous
Transient	ANSI/IEEE C37.90.1
Mechanical Dimensions (h)(w)(d)	2.95" x 0.89" x 4.13" (75mm x 22.5mm x 105mm)
Mounting	DIN EN50022 -35x7.5 or -35x15 rail
Environmental	
Operating Temperature Range	–40°C to +80°C
Storage Temperature Range	–40°C to +80°C
Relative Humidity	0 to 95% Noncondensing
HazLoc ATEX	All models except DSCA33-04x, -05x
Emissions EN61000-6-4	ISM, Group 1
Radiated, Conducted	Class A
Immunity EN61000-6-2	ISM, Group 1
RF	Performance A ±0.83% Span Error
ESD, EFT	Performance B

NOTES:
*Contact factory or your local Dataforth sales office for maximum values.
(1) For 1 to 25 seconds the max allowable transient current rating is √ 2500 / (event time). For less than 1 second, ANSI/IEEE C37.90.1 applies with a 0.05Ω load. For greater than 25 seconds, the 10A max continuous rating applies.
(2) For 0-10% Span measurements, add 0.25% accuracy error (-02 thru -07) or 1.00% accuracy error (-01). Accuracy includes linearity, hysteresis and repeatability but not source or external shunt inaccuracy (if used).
(3) At standard 60Hz factory calibration (90Hz for -01, -06). Consult factory for calibration at other frequencies.

Ordering Information

Model	Input (rms)†	Output (dc)†
DSCA33-01	0mV to 100mV	2, 3, 4, 5, 6
DSCA33-02	0V to 1V	2, 3, 4, 5, 6
DSCA33-03	0V to 10V	2, 3, 4, 5, 6
DSCA33-04	0V to 150V	2, 3, 4, 5, 6
DSCA33-05	0V to 300V	2, 3, 4, 5, 6
DSCA33-06	0A to 1A	2, 3, 4, 5, 6
DSCA33-07	0A to 5A	2, 3, 4, 5, 6

†Modules can be ordered with other input/output ranges.
Consult factory for ordering details and specifications

†Output Ranges Available

Output Range	Part No. Suffix	Example
2. 0V to +10V	NONE	DSCA33-01
3. 4 to 20mA	C	DSCA33-01C
4. 0 to 20mA	E	DSCA33-01E
5. 0V to +5V	A	DSCA33-01A
6. 0 to 1mA	B	DSCA33-01B

Installation Notes:

1.) This Equipment is Suitable for Use in Class I, Division 2, Groups A, B,C, D, or Non-Hazardous Locations Only.

2.) WARNING - Explosion Hazard - Substitution of Components May Impair Suitability for Class I, Division 2.

3.) WARNING - Explosion Hazard - Do Not Disconnect Equipment Unless Power Has Been Switched Off or The Area is Known to be Non-Hazardous.

4.) The Power to These Devices Shall Be Limited By an Over-Current Protection Device, UL Certified Fuse (JDYX/JDYX2) Rated 6A Max.

©1995-2017 Dataforth Corporation, All Rights Reserved ISO9001:2008-Registered QMS

DSCA34

Linearized 2- or 3-Wire RTD Input Signal Conditioners

Description

Each DSCA34 RTD input module provides a single channel of RTD input which is filtered, isolated, amplified, linearized, and converted to a high-level voltage output (Figure 1). Signal filtering is accomplished with a five-pole filter which provides 85dB of normal-mode rejection at 60Hz and 80dB at 50Hz. An antialiasing pole is located on the field side of the isolation barrier, and the other four poles are on the system side. After the initial field-side filtering, the input signal is chopped by a proprietary chopper circuit. Isolation is provided by transformer coupling, again using a proprietary technique to suppress transmission of common mode spikes or surges.

RTD excitation is provided from the module using a precision current source. Lead compensation is achieved by matching two current paths which cancels the effects of lead resistance. The excitation current is small (approx. 0.25mA) which minimizes self-heating of the RTD.

Module output is either voltage or current. For current output models a dedicated loop supply is provided at terminal 3 (+OUT) with loop return located at terminal 4 (-OUT). The system-side load may be either floating or grounded.

Special input circuits provide protection against accidental connection of powerline voltages up to 240VAC and against transient events as defined by ANSI/ IEEE C37.90.1. Protection circuits are also present on the signal output and power input terminals to guard against transient events and power reversal. Signal and power lines are secured to the module using screw terminals which are in pluggable terminal blocks for ease of system assembly and reconfiguration.

The modules have excellent stability over time and do not require recalibration, however, zero and span settings are adjustable up to ±3% to accommodate situations where fine-tuning is desired. The adjustments are made using potentiometers located under the front panel label and are non-interactive for ease of use.

Features

- Interfaces to 100Ω Platinum or 120Ω Nickel RTDs
- Linearizes RTD Signal
- Industry Standard Output of 0 to +10V, 0 to 20mA, or 4 to 20mA
- 1500Vrms Transformer Isolation
- ANSI/IEEE C37.90.1 Transient Protection
- Input Protected to 240VAC Continuous
- True 3-Way Isolation
- Wide Range of Supply Voltage
- 160dB CMR
- 85dB NMR at 60Hz, 80dB at 50Hz
- ±0.08% Accuracy
- ±0.025% Conformity
- Easily Mounts on Standard DIN Rail
- C-UL-US Listed
- CE and ATEX Compliant

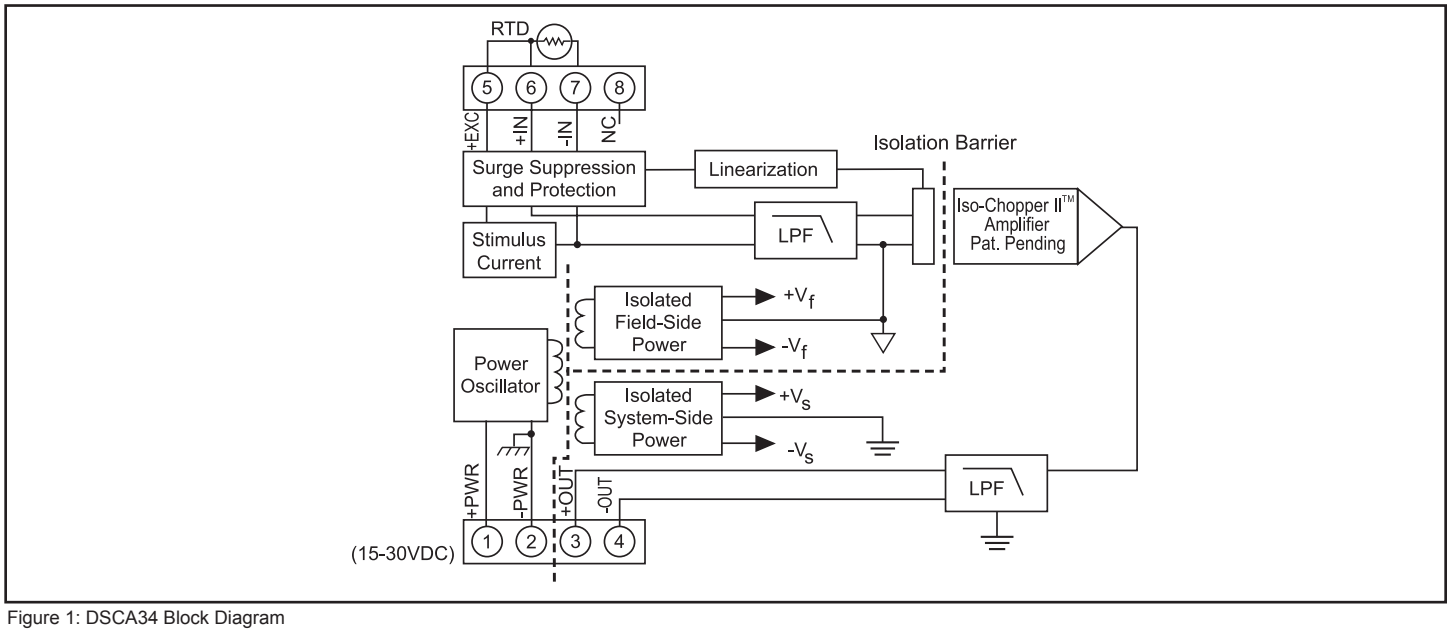

Figure 1: DSCA34 Block Diagram

©1995-2017 Dataforth Corporation, All Rights Reserved ISO9001:2008-Registered QMS

Specifications

Typical* at T_A = +25°C and +24VDC supply voltage

Module	DSCA34
Input Range Limits	–200°C to +850°C (100Ω Pt) –80°C to +320°C (120Ω Ni)
Input Protection	
Continuous	240Vrms max
Transient	ANSI/IEEE C37.90.1
Sensor Excitation Current	≈ 250µA
Lead Resistance Effect	±0.02°C/Ω
Output Range	See Ordering Information
Load Resistance (I_{OUT})	600Ω max
Current Limit	8mA (V_{OUT}), 30mA (I_{OUT})
Output Protection	
Short to Ground	Continuous
Transient	ANSI/IEEE C37.90.1
CMV, Input to Output, Input to Power	
Continuous	1500Vrms max
Transient	ANSI/IEEE C37.90.1
CMV, Output to Power	
Continuous	50VDC max
CMR (50Hz or 60Hz)	160dB
Accuracy	See Ordering Information
Conformity	±0.025% (100Ω Pt) ±0.07% (120Ω Ni)
Adjustability	±3% Zero and Span
Stability	
Input Offset	±1µV/°C
Output Offset	±6ppm/°C (V_{OUT}), ±20ppm/°C (I_{OUT})
Gain	±60ppm/°C
Output Noise, 100kHz Bandwidth	250µVrms (V_{OUT}), 1µArms (I_{OUT})
Bandwidth, –3dB	3Hz
NMR	85dB at 60Hz, 80dB at 50Hz
Response Time, 90% Span	165ms
Open Input Response	
+IN	Upscale
-IN	Non-deterministic
+EXC	Downscale
Power Supply	
Voltage	15 to 30VDC
Current	25mA (V_{OUT}), 55mA (I_{OUT})
Sensitivity	±0.0001%/%
Protection	
Reverse Polarity	Continuous
Transient	ANSI/IEEE C37.90.1
Mechanical Dimensions (h)(w)(d)	2.95" x 0.89" x 4.13" (75mm x 22.5mm x 105mm)
Mounting	DIN EN 50022 -35x7.5 or -35x15 rail
Environmental	
Operating Temperature Range	–40°C to +80°C
Storage Temperature Range	–40°C to +80°C
Relative Humidity	0 to 95% Noncondensing
Emissions EN61000-6-4	ISM, Group 1
Radiated, Conducted	Class A
Immunity EN61000-6-2	ISM, Group 1
RF	Performance A ±0.5% Span Error
ESD, EFT	Performance B

NOTES :
*Contact factory or your local Dataforth sales office for maximum values.
(1) Includes conformity, hysteresis and repeatability.

Ordering Information

Model	Input Range	Output Range†	Accuracy(1)	
100Ω Pt **				
DSCA34-01	–100°C to +100°C (–148°F to +212°F)	2, 3, 4	±0.08%	±0.16°C
DSCA34-02	0°C to +100°C (+32°F to +212°F)	2, 3, 4	±0.10%	±0.10°C
DSCA34-03	0°C to +200°C (+32°F to +392°F)	2, 3, 4	±0.08%	±0.16°C
DSCA34-04	0°C to +600°C (+32°F to +1112°F)	2, 3, 4	±0.05%	±0.30°C
DSCA34-05	–50°C to +350°C (–58°F to +662°F)	2, 3, 4	±0.05%	±0.20°C
120Ω Ni **				
DSCA34N-01	0°C to +300°C (+32°F to +572°F)	2, 3, 4	±0.15%	±0.45°C

†Output Ranges Available

Output Range	Part No. Suffix	Example
1. –10V to +10V	NONE	NA
2. 0V to +10V	NONE	DSCA34-01
3. 4 to 20mA	C	DSCA34-01C
4. 0 to 20mA	E	DSCA34-01E

**RTD Standards

Type	Alpha Coefficient	DIN	JIS	IEC
100Ω Pt 120Ω Ni	0.00385 0.00672	DIN 43760	JIS C 1604-1989	IEC 751

Installation Notes:

1.) This Equipment is Suitable for Use in Class I, Division 2, Groups A, B,C, D, or Non-Hazardous Locations Only.

2.) WARNING - Explosion Hazard - Substitution of Components May Impair Suitability for Class I, Division 2.

3.) WARNING - Explosion Hazard - Do Not Disconnect Equipment Unless Power Has Been Switched Off or The Area is Known to be Non-Hazardous.

4.) The Power to These Devices Shall Be Limited By an Over-Current Protection Device, UL Certified Fuse (JDYX/JDYX2) Rated 6A Max.

©1995-2017 Dataforth Corporation, All Rights Reserved ISO9001:2008-Registered QMS

DSCA36

Potentiometer Input Signal Conditioners

Description

Each DSCA36 potentiometer input module provides a single channel of potentiometer input which is filtered, isolated, amplified, and converted to a high-level voltage output (Figure 1). Signal filtering is accomplished with a fivepole filter which provides 85dB of normal-mode rejection at 60Hz and 80dB at 50Hz. An anti-aliasing pole is located on the field side of the isolation barrier, and the other four poles are on the system side. After the initial field-side filtering, the input signal is chopped by a proprietary chopper circuit. Isolation is provided by transformer coupling, again using a proprietary technique to suppress transmission of common mode spikes or surges.

Potentiometer excitation is provided from the module using a precision current source. Lead compensation is achieved by matching two current paths which cancels the effects of lead resistance. The excitation current is small (approx. 0.25mA) which minimizes self-heating of the sensor.

Module output is either voltage or current. For current output models a dedicated loop supply is provided at terminal 3 (+OUT) with loop return located at terminal 4 (-OUT). The system-side load may be either floating or grounded.

Special input circuits provide protection against accidental connection of powerline voltages up to 240VAC and against transient events as defined by ANSI/ IEEE C37.90.1. Protection circuits are also present on the signal output and power input terminals to guard against transient events and power reversal. Signal and power lines are secured to the module using screw terminals which are in pluggable terminal blocks for ease of system assembly and reconfiguration.

The modules have excellent stability over time and do not require recalibration, however, zero and span settings are adjustable up to ±5% to accommodate situations where fine-tuning is desired. The adjustments are made using potentiometers located under the front panel label and are non-interactive for ease of use.

Features

- Interfaces to Potentiometers up to 10kΩ
- Industry Standard Output of 0 to +10V, 0 to 20mA, or 4 to 20mA
- 1500Vrms Transformer Isolation
- ANSI/IEEE C37.90.1 Transient Protection
- Input Protected to 240VAC Continuous
- True 3-Way Isolation
- Wide Range of Supply Voltage
- 160dB CMR
- 85dB NMR at 60Hz, 80dB at 50Hz
- ±0.03% Accuracy
- ±0.01% Linearity
- Easily Mounts on Standard DIN Rail
- C-UL-US Listed
- CE and ATEX Compliant

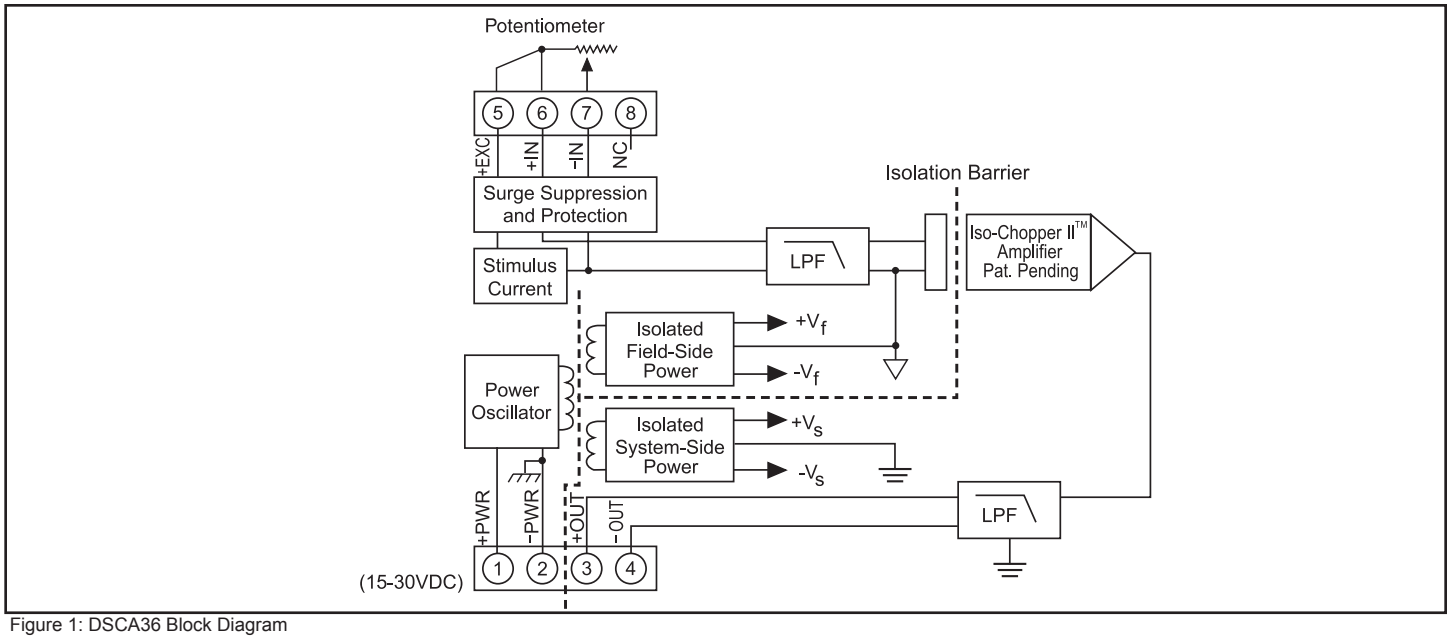

Figure 1: DSCA36 Block Diagram

©1995-2017 Dataforth Corporation, All Rights Reserved ISO9001:2008-Registered QMS

Specifications

Typical* at T_A = +25°C and +24VDC supply voltage

Module	DSCA36
Input Range Limits	0Ω to 10kΩ
Input Protection	
Continuous	240Vrms max
Transient	ANSI/IEEE C37.90.1
Sensor Excitation Current	260µA; 100Ω, 500Ω, 1kΩ Sensor 65µA; 10kΩ Sensor
Lead Resistance Effect	±0.01Ω/Ω; 100Ω, 500Ω, 1kΩ Sensor ±0.02Ω/Ω; 10kΩ Sensor
Output Range	See Ordering Information
Load Resistance (I_{OUT})	600Ω max
Current Limit	8mA (V_{OUT}), 30mA(I_{OUT})
Output Protection	
Short to Ground	Continuous
Transient	ANSI/IEEE C37.90.1
CMV, Input to Output, Input to Power	
Continuous	1500Vrms max
Transient	ANSI/IEEE C37.90.1
CMV, Output to Power	
Continuous	50VDC max
CMR (50Hz or 60Hz)	160dB
Accuracy(1)	±0.03%
Conformity	±0.01%
Adjustability	±5% Zero and Span
Stability	
Input Offset	±0.004Ω/°C; 100Ω, 500Ω, 1kΩ Sensor ±0.01Ω/°C; 10kΩ Sensor
Output Offset	±6ppm/°C (V_{OUT}), ±20ppm/°C (I_{OUT})
Gain	±60ppm/°C
Output Noise, 100kHz Bandwidth	250µVrms (V_{OUT}), 1µArms (I_{OUT})
Bandwidth, –3dB	3Hz
NMR	85dB at 60Hz, 80dB at 50Hz
Response Time, 90% Span	165ms
Open Input Response	
+IN	Upscale
-IN	Non-deterministic
+EXC	Downscale
Power Supply	
Voltage	15 to 30VDC
Current	25mA (V_{OUT}), 55mA (I_{OUT})
Sensitivity	±0.0001%/%
Protection	
Reverse Polarity	Continuous
Transient	ANSI/IEEE C37.90.1
Mechanical Dimensions (h)(w)(d)	2.95" x 0.89" x 4.13" (75mm x 22.5mm x 105mm)
Mounting	DIN EN 50022 -35x7.5 or -35x15 rail
Environmental	
Operating Temperature Range	–40°C to +80°C
Storage Temperature Range	–40°C to +80°C
Relative Humidity	0 to 95% Noncondensing
Emissions EN61000-6-4	ISM, Group 1
Radiated, Conducted	Class A
Immunity EN61000-6-2	ISM, Group 1
RF	Performance A ±0.5% Span Error
ESD, EFT	Performance B

NOTES :
*Contact factory or your local Dataforth sales office for maximum values.
(1) Includes conformity, hysteresis and repeatability.

Ordering Information

Model	Input Range	Output Range†
DSCA36-01	0 to 100Ω	2, 3, 4
DSCA36-02	0 to 500Ω	2, 3, 4
DSCA36-03	0 to 1kΩ	2, 3, 4
DSCA36-04	0 to 10kΩ	2, 3, 4

†Output Ranges Available

Output Range	Part No. Suffix	Example
1. –10V to +10V	NONE	NA
2. 0V to +10V	NONE	DSCA36-01
3. 4 to 20mA	C	DSCA36-01C
4. 0 to 20mA	E	DSCA36-01E

Installation Notes:

1.) This Equipment is Suitable for Use in Class I, Division 2, Groups A, B,C, D, or Non-Hazardous Locations Only.

2.) WARNING - Explosion Hazard - Substitution of Components May Impair Suitability for Class I, Division 2.

3.) WARNING - Explosion Hazard - Do Not Disconnect Equipment Unless Power Has Been Switched Off or The Area is Known to be Non-Hazardous.

4.) The Power to These Devices Shall Be Limited By an Over-Current Protection Device, UL Certified Fuse (JDYX/JDYX2) Rated 6A Max.

©1995-2017 Dataforth Corporation, All Rights Reserved ISO9001:2008-Registered QMS

DSCA37

Non-Linearized Thermocouple Input Signal Conditioners

Description

Each DSCA37 non-linearized thermocouple input module provides a single channel of thermocouple input which is filtered, isolated, amplified, and converted to a high-level voltage output (Figure 1). Signal filtering is accomplished with a five-pole filter which provides 85dB of normal-mode rejection at 60Hz and 80dB at 50Hz. An anti-aliasing pole is located on the field side of the isolation barrier, and the other four poles are on the system side. After the initial field-side filtering, the input signal is chopped by a proprietary chopper circuit. Isolation is provided by transformer coupling, again using a proprietary technique to suppress transmission of common mode spikes or surges.

The DSCA37 can interface to eight industry standard thermocouple types: J, K, T, E, R, S, B and N. Each module has cold junction compensation to correct for parasitic thermocouples formed by the thermocouple wire and input screw terminals on the module. Upscale open thermocouple detection is provide by internal circuitry. Downscale indication can be implemented by installing a 47MΩ, ±20% resistor between screw terminals 6 and 8 on the input terminal block.

Module output is either voltage or current. For current output models a dedicated loop supply is provided at terminal 3 (+OUT) with loop return located at terminal 4 (-OUT). The system-side load may be either floating or grounded.

Special input circuits provide protection against accidental connection of power-line voltages up to 240VAC and against transient events as defined by ANSI/IEEE C37.90.1. Protection circuits are also present on the signal output and power input terminals to guard against transient events and power reversal. Power lines are secured to the module using screw terminals which are in pluggable terminal blocks for ease of system assembly and reconfiguration.

The modules have excellent stability over time and do not require recalibration, however, zero and span settings are adjustable up to ±5% to accommodate situations where fine-tuning is desired. The adjustments are made using potentiometers located under the front panel label and are non-interactive for ease of use.

Features

- Interfaces to Types J, K, T, E, R, S, B, and N Thermocouples
- Industry Standard Output of 0 to +10V, 0 to 20mA, or 4 to 20mA
- 1500Vrms Transformer Isolation
- ANSI/IEEE C37.90.1 Transient Protection
- Input Protected to 240VAC Continuous
- True 3-Way Isolation
- Wide Range of Supply Voltage
- 160dB CMR
- 85dB NMR at 60Hz, 80dB at 50Hz
- ±0.05% Accuracy
- ±0.01% Linearity
- Easily Mounts on Standard DIN Rail
- C-UL-US Listed
- CE and ATEX Compliant

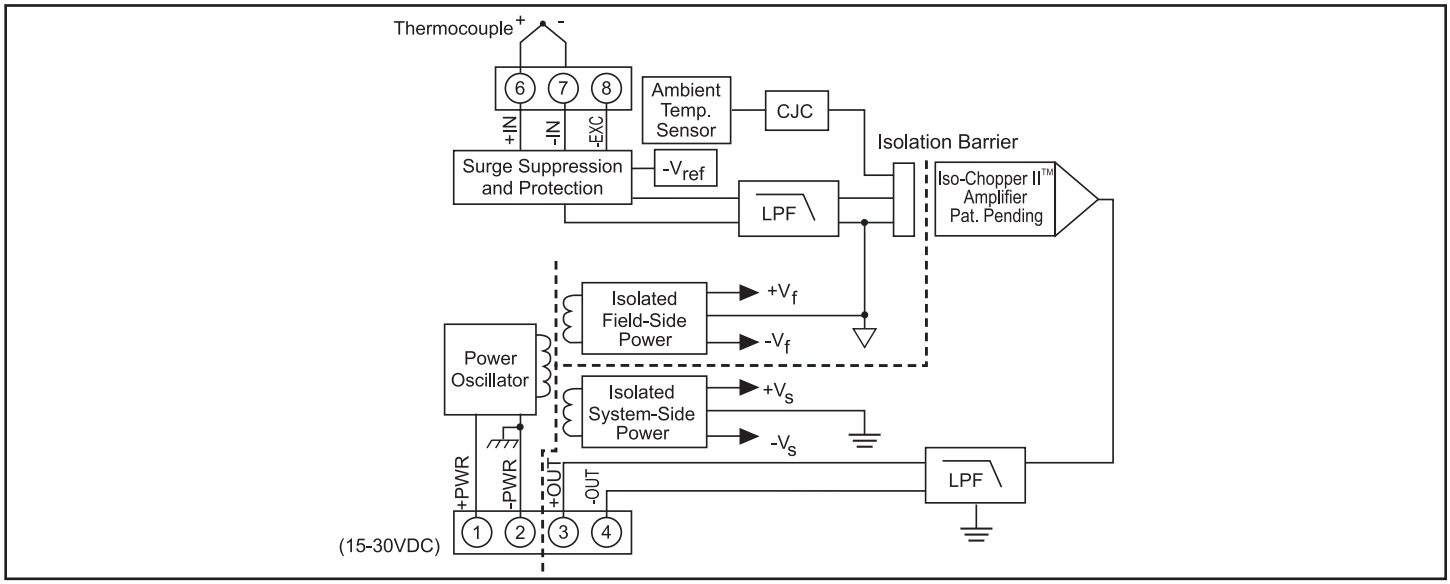

Figure 1: DSCA37 Block Diagram

©1995-2017 Dataforth Corporation, All Rights Reserved ISO9001:2008-Registered QMS

Specifications

Typical* at T_A = +25°C and +24VDC supply voltage

Module	DSCA37
Input Range	Standard Thermocouple Temperature Limits as per NIST Monograph 175, ITS-90
Input Bias Current	–30nA
Input Resistance	
Normal	50MΩ
Power Off	65kΩ
Overload	65kΩ
Input Protection	
Continuous	240Vrms max
Transient	ANSI/IEEE C37.90.1
Cold Junction Compensation	
Accuracy, +5°C to +45°C	±0.5°C
Accuracy, –40°C to +80°C	±1.25°C
Output Range	See Ordering Information
Load Resistance (I_{OUT})	600Ω max
Current Limit	8mA (V_{OUT}), 30mA (I_{OUT})
Output Protection	
Short to Ground	Continuous
Transient	ANSI/IEEE C37.90.1
CMV, Input to Output, Input to Power	
Continuous	1500Vrms max
Transient	ANSI/IEEE C37.90.1
CMV, Output to Power	
Continuous	50VDC max
CMR (50Hz or 60Hz)	160dB
Accuracy	See Ordering Information
Linearity	±0.01% Span
Adjustability	±5% Zero and Span
Stability	
Input Offset	±0.5µV/°C
Output Offset	±6ppm/°C (V_{OUT}), ±20ppm/°C (I_{OUT})
Gain	±35ppm/°C
Output Noise, 100kHz Bandwidth	250µVrms (V_{OUT}), 1µArms (I_{OUT})
Bandwidth, –3dB	3Hz
NMR	85dB at 60Hz, 80dB at 50Hz
Response Time, 90% Span	165ms
Open Input Response	Upscale
Open Input Detection Time	<5s
Power Supply	
Voltage	15 to 30VDC
Current	25mA (V_{OUT}), 55mA (I_{OUT})
Sensitivity	±0.0001%/%
Protection	
Reverse Polarity	Continuous
Transient	ANSI/IEEE C37.90.1
Mechanical Dimensions (h)(w)(d)	2.95" x 0.89" x 4.13" (75mm x 22.5mm x 105mm)
Mounting	DIN EN 50022 -35x7.5 or -35x15 rail
Environmental	
Operating Temperature Range	–40°C to +80°C
Storage Temperature Range	–40°C to +80°C
Relative Humidity	0 to 95% Noncondensing
Emissions EN61000-6-4	ISM, Group 1
Radiated, Conducted	Class A
Immunity EN61000-6-2	ISM, Group 1
RF	Performance A ±0.5% Span Error
ESD, EFT	Performance B

NOTES:
*Contact factory or your local Dataforth sales office for maximum values.
(1) Includes conformity, hysteresis, repeatability, and CJC error.

Ordering Information

Model	TC Type‡	Input Range	Output Range†	Accuracy[1]	
DSCA37J-01	J	–100°C to +760°C (–148°F to +1400°F)	2, 3, 4	±0.05%	±0.43°C
DSCA37K-02	K	–100°C to +1350°C (–148°F to +2462°F)	2, 3, 4	±0.05%	±0.73°C
DSCA37T-03	T	–100°C to +400°C (–148°F to +752°F)	2, 3, 4	±0.05%	±0.25°C
DSCA37E-04	E	0°C to +900°C (+32°F to +1652°F)	2, 3, 4	±0.05%	±0.45°C
DSCA37R-05	R	0°C to +1750°C (+32°F to +3182°F)	2, 3, 4	±0.05%	±0.88°C
DSCA37S-06	S	0°C to +1750°C (+32°F to +3182°F)	2, 3, 4	±0.05%	±0.88°C
DSCA37B-07	B	0°C to +1800°C (+32°F to +3272°F)	2, 3, 4	±0.05%	±0.90°C
DSCA37N-08	N	–100°C to +1300°C (–148°F to +2372°F)	2, 3, 4	±0.05%	±0.70°C

†Output Ranges Available

Output Range	Part No. Suffix	Example
1. –10V to +10V	NONE	NA
2. 0V to +10V	NONE	DSCA37J-01
3. 4 to 20mA	C	DSCA37J-01C
4. 0 to 20mA	E	DSCA37J-01E

‡Thermocouple Alloy Combinations

Standards: DIN IEC 584, ANSI MC96-1-82, JIS C 1602-1981

Type	Material
J	Iron vs. Copper-Nickel
K	Nickel-Chromium vs. Nickel-Aluminum
T	Copper vs. Copper-Nickel
E	Nickel-Chromium vs. Copper-Nickel
R	Platinum-13% Rhodium vs. Platinum
S	Platinum-10% Rhodium vs. Platinum
B	Platinum-30% Rhodium vs. Platinum-6% Rhodium
N	Nickel-14.2% Chromium-1.4% Silicon vs. Nickel-4.4% Silicon- 0.1% Magnesium

Installation Notes:

1.) This Equipment is Suitable for Use in Class I, Division 2, Groups A, B,C, D, or Non-Hazardous Locations Only.

2.) WARNING - Explosion Hazard - Substitution of Components May Impair Suitability for Class I, Division 2.

3.) WARNING - Explosion Hazard - Do Not Disconnect Equipment Unless Power Has Been Switched Off or The Area is Known to be Non-Hazardous.

4.) The Power to These Devices Shall Be Limited By an Over-Current Protection Device, UL Certified Fuse (JDYX/JDYX2) Rated 6A Max.

©1995-2017 Dataforth Corporation, All Rights Reserved ISO9001:2008-Registered QMS

DSCA38

Strain Gage Input Signal Conditioners

Description

Each DSCA38 strain gage input module provides a single channel of strain gage input which is filtered, isolated, amplified, and converted to a high-level voltage output (Figure 1). Signal filtering is accomplished with a five-pole filter which is optimized for step response. An anti-aliasing pole is located on the field side of the isolation barrier, and the other four poles are on the system side. After the initial field-side filtering, the input signal is chopped by a proprietary chopper circuit. Isolation is provided by transformer coupling, again using a proprietary technique to suppress transmission of common mode spikes or surges.

The DSCA38 can interface to transducers with a nominal resistance of 100Ω to 10kΩ. Strain gage excitation is provided from the module by a stable 10V or 3.333V source. This source is fully isolated, allowing the amplifier inputs to operate over the full range of the excitation voltage.This feature enables the module to be interfaced to other sensors requiring exctitation.

Module output is either voltage or current. For current output models a dedicated loop supply is provided at terminal 3 (+OUT) with loop return located at terminal 4 (-OUT). The system-side load may be either floating or grounded.

Special input circuits provide signal input and excitation protection against accidental connection of power-line voltages up to 240VAC and against transient events as defined by ANSI/IEEE C37.90.1. Protection circuits are also present on the signal output and power input terminals to guard against transient events and power reversal. Signal and power lines are secured to the module using screw terminals which are in pluggable terminal blocks for ease of system assembly and reconfiguration.

Features

- Interfaces to 100Ω through 10kΩ Strain Gages
- Industry Standard Output of ±10V, 0 to 20mA, or 4 to 20mA
- 1500Vrms Transformer Isolation
- ANSI/IEEE C37.90.1 Transient Protection
- Input Protected to 240VAC Continuous
- True 3-Way Isolation
- Wide Range of Supply Voltage
- 100dB CMR
- Fully Isolated Excitation Supply
- ±0.03% Accuracy
- ±0.01% Linearity
- Easily Mounts on Standard DIN Rail
- C-UL-US Listed
- CE and ATEX Compliant

The modules have excellent stability over time and do not require recalibration, however, zero and span settings are adjustable up to ±5% to accommodate situations where fine-tuning is desired. The zero adjustment can be used to offset bridge imbalances. The adjustments are made using potentiometers located under the front panel label and are non-interactive for ease of use.

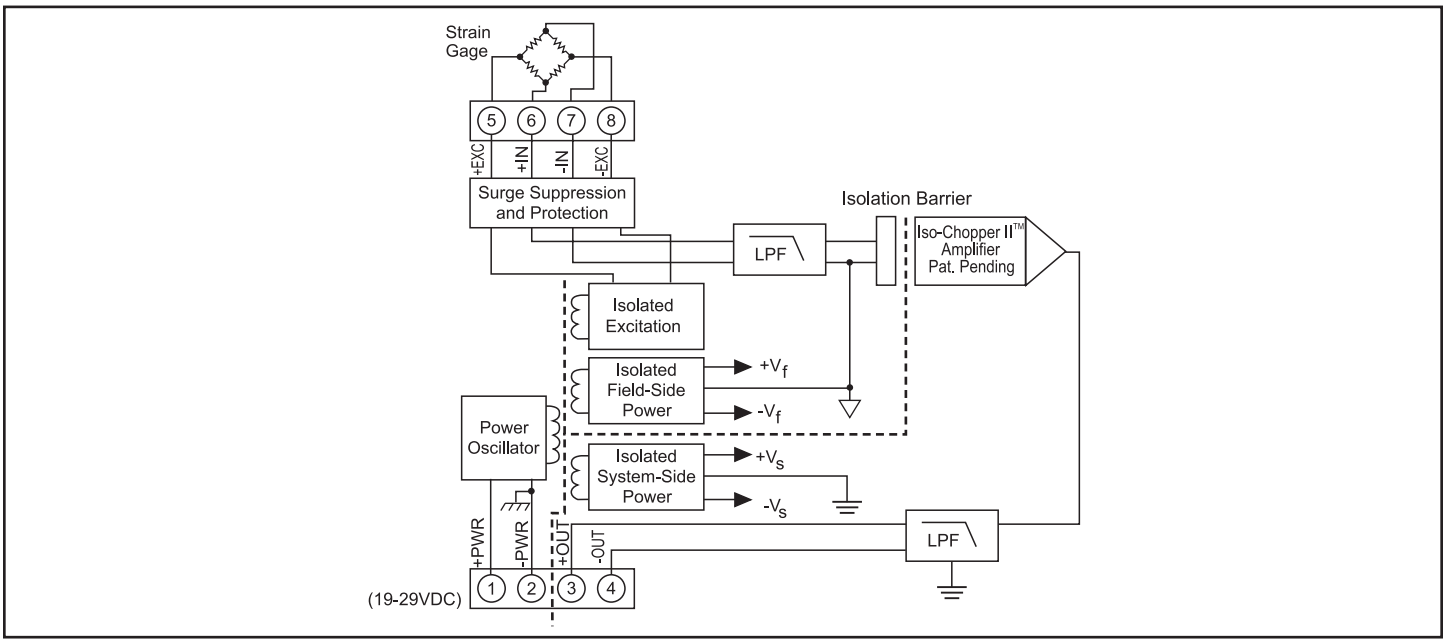

Figure 1: DSCA38 Block Diagram

©1995-2017 Dataforth Corporation, All Rights Reserved ISO9001:2008-Registered QMS

Specifications

Typical* at T_A = +25°C and +24VDC supply voltage

Module	DSCA38
Input Range	±10mV to ±100mV
Input Bias Current	±0.5nA
Input Resistance	
Normal	50MΩ
Power Off	65kΩ
Overload	65kΩ
Signal Input Protection	
Continuous	240Vrms max (Full Bridge) 120Vrms max (Half Bridge)
Transient	ANSI/IEEE C37.90.1
Excitation	
Output	10V ±0.03% or 3.33V ±0.03%
Half Bridge Output Level	Excitation Output/2 ±0.03%
Load Resistance (10V)	300Ω to 10kΩ
Load Resistance (3.33V)	100Ω to 10kΩ
Load Regulation	±5ppm/mA
Stability	±15ppm/°C
Protection	
Continuous	240Vrms max
Transient	ANSI/IEEE C37.90.1
Output Range	See Ordering Information
Load Resistance (I_{OUT})	600Ω max
Current Limit	8mA (V_{OUT}), 30mA (I_{OUT})
Output Protection	
Short to Ground	Continuous
Transient	ANSI/IEEE C37.90.1
CMV, Input to Output, Input to Power	
Continuous	1500Vrms max
Transient	ANSI/IEEE C37.90.1
CMV, Output to Power	
Continuous	50VDC max
CMR (50Hz or 60Hz)	100dB
Accuracy(1)	±0.03% Span
Linearity	±0.01% Span
Adjustability	±5% Zero and Span
Stability	
Input Offset	±1µV/°C
Output Offset	±6ppm/°C (V_{OUT}), ±20ppm/°C (I_{OUT})
Gain	±55ppm/°C
Output Noise, 100kHz Bandwidth	750µVrms (V_{OUT}), 3µArms (I_{OUT})
Bandwidth, –3dB	3kHz
NMR	100dB per Decade above 3kHz
Response Time, 90% Span	170µs
Power Supply	
Voltage	19 to 29VDC
Current	60mA (V_{OUT}), 80mA (I_{OUT})
Sensitivity	±0.0002%/%
Protection	
Reverse Polarity	Continuous
Transient	ANSI/IEEE C37.90.1
Mechanical Dimensions (h)(w)(d)	2.95" x 0.89" x 4.13" (75mm x 22.5mm x 105mm)
Mounting	DIN EN 50022 -35x7.5 or -35x15 rail
Environmental	
Operating Temperature Range	–40°C to +80°C
Storage Temperature Range	–40°C to +80°C
Relative Humidity	0 to 95% Noncondensing
Emissions EN61000-6-4	ISM, Group 1
Radiated, Conducted	Class A
Immunity EN61000-6-2	ISM, Group 1
RF	Performance A ±0.5% Span Error
ESD, EFT	Performance B

NOTES:
*Contact factory or your local Dataforth sales office for maximum values.
(1) Includes linearity, hysteresis and repeatability. (2) Strain Element.

Ordering Information

Model	Type Bridge Input	Input Range	Excitation	Sens.	Output Range†
DSCA38-01	Full	–10mV to +10mV	+3.333V	3mV/V	1
DSCA38-02	Full	–30mV to +30mV	+10.0V	3mV/V	1
DSCA38-03	Half	–10mV to +10mV	+3.333V	3mV/V	1
DSCA38-04	Half	–30mV to +30mV	+10.0V	3mV/V	1
DSCA38-05	Full	–20mV to +20mV	+10.0V	2mV/V	1
DSCA38-06	Full	–33.3mV to +33.3mV	+3.333V	10mV/V	1
DSCA38-07	Full	–100mV to +100mV	+10.0V	10mV/V	1
DSCA38-08	Full	–10mV to +10mV	+3.333V	3mV/V	2, 3, 4
DSCA38-09	Full	–30mV to +30mV	+10.0V	3mV/V	2, 3, 4
DSCA38-10	Half	–10mV to +10mV	+3.333V	3mV/V	2, 3, 4
DSCA38-11	Half	–30mV to +30mV	+10.0V	3mV/V	2, 3, 4
DSCA38-12	Full	–20mV to +20mV	+10.0V	2mV/V	2, 3, 4
DSCA38-13	Full	–33.3mV to +33.3mV	+3.333V	10mV/V	2, 3, 4
DSCA38-14	Full	–100mV to +100mV	+10.0V	10mV/V	2, 3, 4
DSCA38-15	Full	0 to +10mV	+3.333V	3mV/V	2, 3, 4
DSCA38-16	Full	0 to +30mV	+10.0V	3mV/V	2, 3, 4
DSCA38-17	Half	0 to +10mV	+3.333V	3mV/V	2, 3, 4
DSCA38-18	Half	0 to +30mV	+10.0V	3mV/V	2, 3, 4
DSCA38-19	Full	0 to +20mV	+10.0V	2mV/V	2, 3, 4
DSCA38-20	Full	0 to +33.3mV	+3.333V	10mV/V	2, 3, 4
DSCA38-21	Full	0 to +100mV	+10.0V	10mV/V	2, 3, 4

†Output Ranges Available

Output Range	Part No. Suffix	Example
1. –10V to +10V	NONE	DSCA38-01
2. 0V to +10V	NONE	DSCA38-08
3. 4 to 20mA	C	DSCA38-08C
4. 0 to 20mA	E	DSCA38-08E

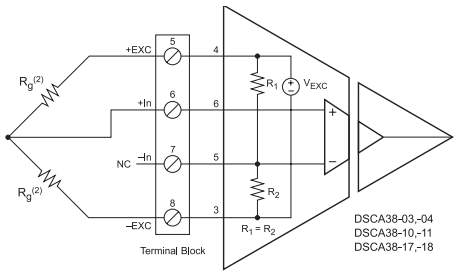

Figure 2: Half Bridge Connection

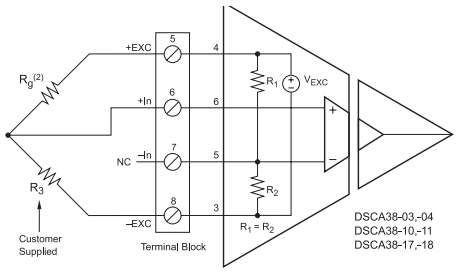

Figure 3: Quarter Bridge Connection

Installation Notes:
1.) This Equipment is Suitable for Use in Class I, Division 2, Groups A, B, C, D, or Non-Hazardous Locations Only.
2.) WARNING - Explosion Hazard - Substitution of Components May Impair Suitability for Class I, Division 2.
3.) WARNING - Explosion Hazard - Do Not Disconnect Equipment Unless Power Has Been Switched Off or The Area is Known to be Non-Hazardous.
4.) The Power to These Devices Shall Be Limited By an Over-Current Protection Device, UL Certified Fuse (JDYX/JDYX2) Rated 6A Max.

©1995-2017 Dataforth Corporation, All Rights Reserved ISO9001:2008-Registered QMS

DSCA39

Current Output Signal Conditioners

Description

Each DSCA39 current output module provides a single channel of analog output. The input signal is buffered, isolated, filtered and converted to a unipolar or bipolar current output (Figure 1). Signal filtering is accomplished with a fivepole filter which provides 100dB per decade of attenuation above 1kHz. An anti-aliasing pole is located on the system side of the isolation barrier, and the other four poles are on the field side. After the initial system-side filtering, the input signal is chopped by a proprietary chopper circuit. Isolation is provided by transformer coupling, again using a proprietary technique to suppress transmission of common mode spikes or surges.

Special output circuits provide protection against accidental connection of power-line voltages up to 240VAC and against transient events as defined by ANSI/IEEE C37.90.1. Protection circuits are also present on the signal input and power input terminals to guard against transient events and power reversal. Signal and power lines are secured to the module using screw terminals which are in pluggable terminal blocks for ease of system assembly and reconfiguration.

The modules have excellent stability over time and do not require recalibration, however, zero and span settings are adjustable up to ±5% to accommodate situations where fine-tuning is desired. The adjustments are made using potentiometers located under the front panel label and are non-interactive for ease of use.

Features

- Accepts High-Level Voltage Input
- Provides 4 to 20mA, 0 to 20mA, or –20 to +20mA Output
- ANSI/IEEE C37.90.1 Transient Protection
- 1500Vrms Transformer Isolation
- ±0.03% Accuracy
- ±0.01% Linearity
- Output Protected to 240VAC Continuous
- True 3-Way Isolation
- Wide Range of Supply Voltage
- 100dB CMR
- Easily Mounts on Standard DIN Rail
- C-UL-US Listed
- CE and ATEX Compliant

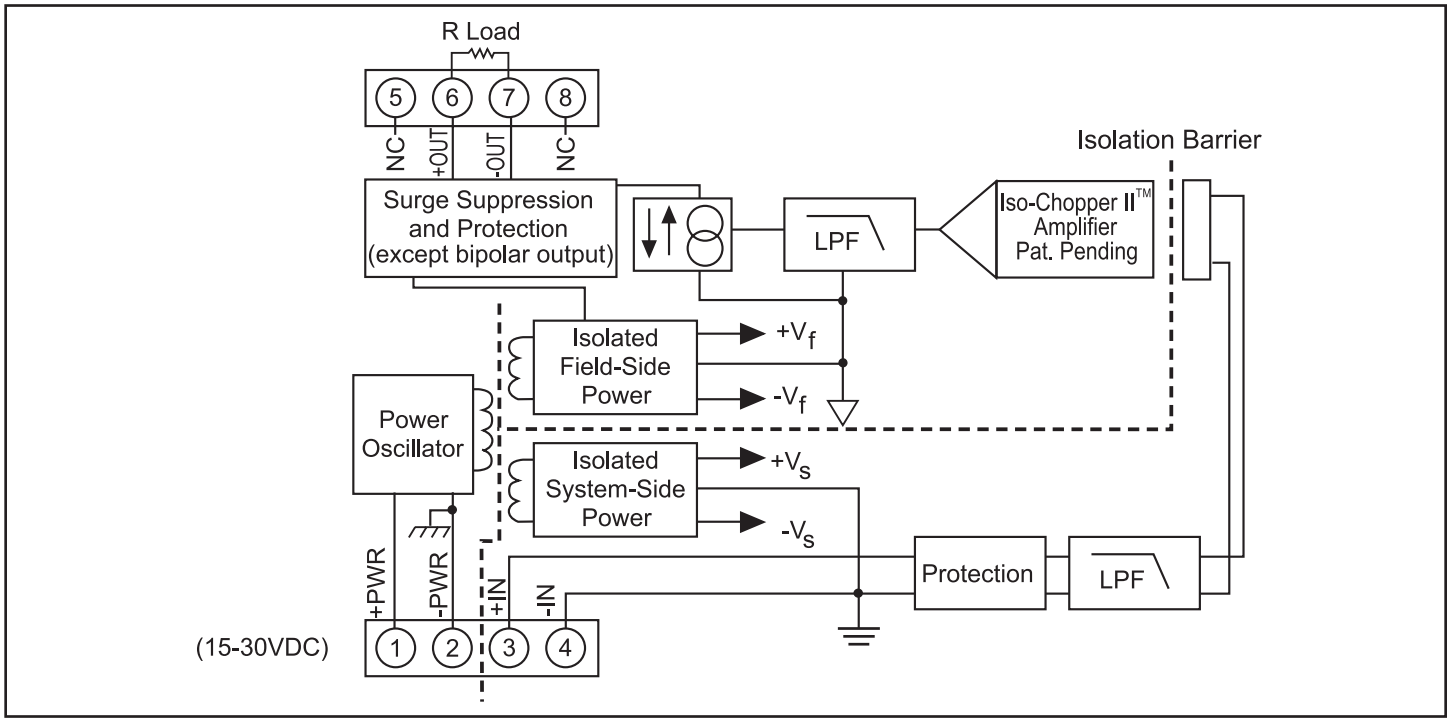

Figure 1: DSCA39 Block Diagram

©1995-2017 Dataforth Corporation, All Rights Reserved ISO9001:2008-Registered QMS

Specifications

Typical* at T_A = +25°C and +24VDC supply voltage

Module	DSCA39-01, -02, -03, -04	DSCA39-05	DSCA39-07
Output Range	4 to 20mA or 0 to 20mA	0 to 20mA	–20mA to +20mA
Over Range Capability	10%	*	5%
Output Compliance Voltage			
(Open Circuit)	22VDC	*	±15VDC
Load Resistance Range	0 to 750Ω	*	0 to 500Ω
Output Protection			
Continuous	240Vrms max	*	*
Transient	ANSI/IEEE C37.90.1	*	*
Input Range	±10V or 0V to +10V	0 to 20mA	±10V
Input Resistance			
Normal	2MΩ	<100Ω	*
Power Off	2MΩ	<100Ω	*
Overload	2MΩ	65kΩ	*
Input Protection			
Continuous	±35V max	75mA	*
Transient	ANSI/IEEE C37.90.1	*	*
CMV, Output to Input, Output to Power		*	*
Continuous	1500Vrms max	*	*
Transient	ANSI/IEEE C37.90.1		
CMV, Input to Power		*	*
Continuous	50VDC max	*	*
CMR (50Hz or 60Hz)	110dB		
		*	
Accuracy(1)	±0.03% Span	*	±0.05%
Linearity	±0.01% Span		*
Adjustability	±5% Zero and Span	*	*
Stability			
Offset	±20ppm/°C	*	*
Gain	±40ppm/°C	±50ppm/°C	*
Output Noise, 100kHz Bandwidth	4µArms	*	*
Bandwidth, –3dB	1kHz	*	*
NMR	100dB per Decade above 1kHz	*	*
Response Time, 90% Span	475µs	*	*
Power Supply			
Voltage	15 to 30VDC	*	19 to 29VDC
Current	65mA	*	*
Sensitivity	±0.0003%/%	*	*
Protection			
Reverse Polarity	Continuous	*	*
Transient	ANSI/IEEE C37.90.1	*	*
Mechanical Dimensions (h)(w)(d)	2.95" x 0.89" x 4.13" (75mm x 22.5mm x 105mm)	*	*
Mounting	DIN EN 50022 -35x7.5 or -35x15 rail	*	*
Environmental			
Operating Temperature Range	–40°C to +80°C	*	*
Storage Temperature Range	–40°C to +80°C	*	*
Relative Humidity	0 to 95% Noncondensing	*	*
Emissions EN61000-6-4	ISM, Group 1	*	*
Radiated, Conducted	Class A	*	*
Immunity EN61000-6-2	ISM, Group 1	*	*
RF	Performance A ±0.5% Span Error	*	*
ESD, EFT	Performance B	*	*

NOTES:
*Contact factory or your local Dataforth sales office for maximum values.
* Same specification as DSCA39-01, -02, -03, -04
(1) Includes linearity, hysteresis and repeatability.

Installation Notes:
1.) This Equipment is Suitable for Use in Class I, Division 2, Groups A, B, C, D, or Non-Hazardous Locations Only.
2.) WARNING - Explosion Hazard - Substitution of Components May Impair Suitability for Class I, Division 2.
3.) WARNING - Explosion Hazard - Do Not Disconnect Equipment Unless Power Has Been Switched Off or The Area is Known to be Non-Hazardous.
4.) The Power to These Devices Shall Be Limited By an Over-Current Protection Device, UL Certified Fuse (JDYX/JDYX2) Rated 6A Max.

Ordering Information

Model	Input Range	Output Range
DSCA39-01	0V to +10V	4mA to 20mA
DSCA39-02	–10V to +10V	4mA to 20mA
DSCA39-03	0V to +10V	0mA to 20mA
DSCA39-04	–10V to +10V	0mA to 20mA
DSCA39-05	0mA to 20mA	0mA to 20mA
DSCA39-07	–10V to +10V	–20mA to +20mA

©1995-2017 Dataforth Corporation, All Rights Reserved ISO9001:2008-Registered QMS

DSCA40/41

Analog Voltage Input Signal Conditioners, Wide Bandwidth

Description

Each DSCA40/41 voltage input module provides a single channel of analog input which is filtered, isolated, amplified, and converted to a high-level voltage output (Figure 1). Signal filtering is accomplished with a five-pole filter. An antialiasing pole is located on the field side of the isolation barrier, and the other four poles are on the system side. After the initial field-side filtering, the input signal is chopped by a proprietary chopper circuit. Isolation is provided by transformer coupling, again using a proprietary technique to suppress transmission of common mode spikes or surges.

Module output is either voltage or current. For current output models a dedicated loop supply is provided at terminal 3 (+OUT) with loop return located at terminal 4 (-OUT). The system-side load may be either floating or grounded.

Special input circuits provide protection against accidental connection of powerline voltages up to 240VAC and against transient events as defined by ANSI/ IEEE C37.90.1. Protection circuits are also present on the signal output and power input terminals to guard against transient events and power reversal. Signal and power lines are secured to the module using screw terminals which are in pluggable terminal blocks for ease of system assembly and reconfiguration.

The modules have excellent stability over time and do not require recalibration, however, zero and span settings are adjustable up to ±5% to accommodate situations where fine-tuning is desired. The adjustments are made using potentiometers located under the front panel label and are non-interactive for ease of use.

Features

- Accepts Millivolt and Voltage Level Signals
- Industry Standard Output of 0 to +10V, ±10V, 0 to 20mA, or 4 to 20mA
- 1500Vrms Transformer Isolation
- ANSI/IEEE C37.90.1 Transient Protection
- Input Protected to 240VAC Continuous
- True 3-Way Isolation
- Wide Range of Supply Voltage
- 100dB CMR
- 3 kHz Signal Bandwidth
- ±0.03% Accuracy
- ±0.01% Linearity
- Easily Mounts on Standard DIN Rail
- C-UL-US Listed
- CE and ATEX Compliant

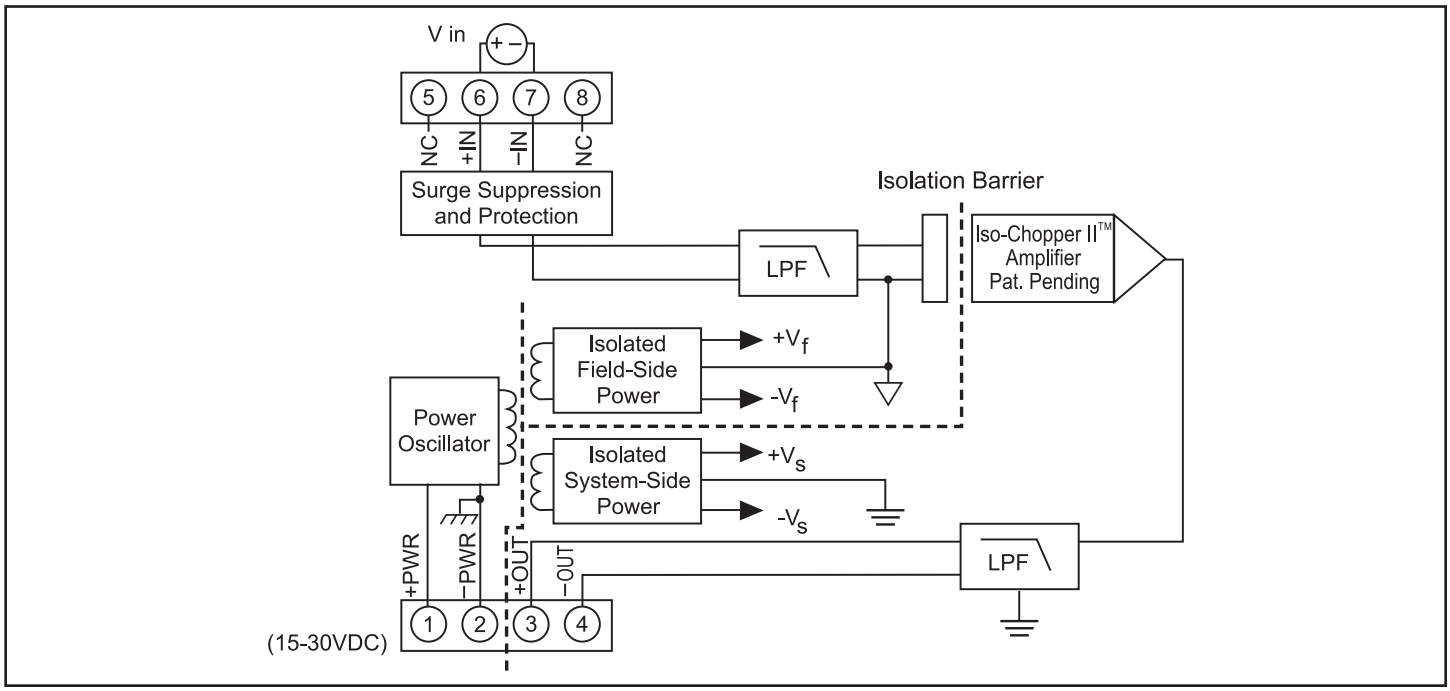

Figure 1: DSCA40/41 Block Diagram

©1995-2017 Dataforth Corporation, All Rights Reserved ISO9001:2008-Registered QMS

Specifications

Typical* at T_A = +25°C and +24VDC supply voltage

Module	DSCA40	DSCA41
Input Range	+10mV to +100mV	±1V to ±40V
Input Bias Current	±0.5nA	±0.05nA
Input Resistance		
Normal	50MΩ	500kΩ min
Power Off	65kΩ	500kΩ min
Overload	65kΩ	500kΩ min
Input Protection		
Continuous	240Vrms max	*
Transient	ANSI/IEEE C37.90.1	*
Output Range	See Ordering Information	
Load Resistance (I_{OUT})	600Ω max	*
Current Limit	8mA (V_{OUT}), 30mA (I_{OUT})	
Output Protection		*
Short to Ground	Continuous	*
Transient	ANSI/IEEE C37.90.1	
CMV, Input to Output, Input to Power		*
Continuous	1500Vrms max	*
Transient	ANSI/IEEE C37.90.1	
CMV, Output to Power		*
Continuous	50VDC max	*
CMR (50Hz or 60Hz)	100dB	
Accuracy(1)	±0.03% Span	*
Linearity	±0.01% Span	*
Adjustability	±5% Zero and Span	*
Stability		
Input Offset	±0.5µV/°C	±5µV/°C
Output Offset	±6ppm/°C (V_{OUT}), ±20ppm/°C (I_{OUT})	*
Zero Suppression	±50ppm(V_z)(2)/°C	*
Gain	±35ppm/°C	±55ppm/°C
Output Noise, 100kHz Bandwidth	500µVrms (V_{OUT}), 2µArms (I_{OUT})	*
Bandwidth, –3dB	3kHz	*
NMR	100dB per Decade above 3kHz	*
Response Time, 90% Span	170µs	*
Power Supply		
Voltage	15 to 30VDC	*
Current	25mA (V_{OUT}), 55mA (I_{OUT})	*
Sensitivity	±0.0001%/%	*
Protection		
Reverse Polarity	Continuous	*
Transient	ANSI/IEEE C37.90.1	*
Mechanical Dimensions (h)(w)(d)	2.95" x 0.89" x 4.13" (75mm x 22.5mm x 105mm)	*
Mounting	DIN EN 50022 -35x7.5 or -35x15 rail	*
Environmental		
Operating Temperature Range	–40°C to +80°C	*
Storage Temperature Range	–40°C to +80°C	*
Relative Humidity	0to 95% Noncondensing	*
Emissions EN61000-6-4	ISM, Group 1	*
Radiated, Conducted	Class A	*
Immunity EN61000-6-2	ISM, Group 1	*
RF	Performance A ±0.5% Span Error	*
ESD, EFT	Performance B	*

NOTES:
*Contact factory or your local Dataforth sales office for maximum values.
* Same specification as DSCA40.
(1) Includes linearity, hysteresis and repeatability.
(2) V_z is the nominal input voltage that results in 0V or 0mA output.

Ordering Information

Model	Input Range	Output Range †
DSCA40-01	–10mV to +10mV	1
DSCA40-02	–50mV to +50mV	1
DSCA40-03	–100mV to +100mV	1
DSCA40-04	–10mV to +10mV	2, 3, 4
DSCA40-05	–50mV to +50mV	2, 3, 4
DSCA40-06	–100mV to +100mV	2, 3, 4
DSCA40-07	0 to +10mV	2, 3, 4
DSCA40-08	0 to +50mV	2, 3, 4
DSCA40-09	0 to +100mV	2, 3, 4
DSCA41-01	–1V to +1V	1
DSCA41-02	–5V to +5V	1
DSCA41-03	–10V to +10V	1
DSCA41-04	–1V to +1V	2, 3, 4
DSCA41-05	–5V to +5V	2, 3, 4
DSCA41-06	–10V to +10V	2, 3, 4
DSCA41-07	–20V to +20V	1
DSCA41-08	–20V to +20V	2, 3, 4
DSCA41-09	–40V to +40V	1
DSCA41-10	–40V to +40V	2, 3, 4
DSCA41-11	0 to +1V	2, 3, 4
DSCA41-12	0 to +5V	2, 3, 4
DSCA41-13	0 to +10V	2, 3, 4
DSCA41-14	0 to +20V	2, 3, 4
DSCA41-15	0 to +40V	2, 3, 4

†Output Ranges Available

Output Range	Part No. Suffix	Example
1. –10V to +10V	NONE	DSCA40-01
2. 0V to +10V	NONE	DSCA40-04
3. 4 to 20mA	C	DSCA40-04C
4. 0 to 20mA	E	DSCA40-04E

Installation Notes:

1.) This Equipment is Suitable for Use in Class I, Division 2, Groups A, B,C, D, or Non-Hazardous Locations Only.

2.) WARNING - Explosion Hazard - Substitution of Components May Impair Suitability for Class I, Division 2.

3.) WARNING - Explosion Hazard - Do Not Disconnect Equipment Unless Power Has Been Switched Off or The Area is Known to be Non-Hazardous.

4.) The Power to These Devices Shall Be Limited By an Over-Current Protection Device, UL Certified Fuse (JDYX/JDYX2) Rated 6A Max.

©1995-2017 Dataforth Corporation, All Rights Reserved ISO9001:2008-Registered QMS

DSCA42

2-Wire Transmitter Interface Signal Conditioners with Loop Power

Description

Each DSCA42 2-wire transmitter interface module provides a single channel of 4 to 20mA process current input which is filtered, isolated, amplified, and converted to a high-level voltage output (Figure 1). An isolated 24V power supply is provided to power the 2-wire transmitter. Signal filtering is accomplished with a five-pole filter which is optimized for step response. An anti-aliasing pole is located on the field side of the isolation barrier, and the other four poles are on the system side. After the initial field-side filtering, the input signal is chopped by a proprietary chopper circuit. Isolation is provided by transformer coupling, again using a proprietary technique to suppress transmission of common mode spikes or surges.

Module output is either voltage or current. For current output models a dedicated loop supply is provided at terminal 3 (+OUT) with loop return located at terminal 4 (-OUT). The system-side load may be either floating or grounded.

Special input circuits provide protection against accidental connection of powerline voltages up to 240VAC and against transient events as defined by ANSI/ IEEE C37.90.1. Protection circuits are also present on the signal output and power input terminals to guard against transient events and power reversal. Signal and power lines are secured to the module using screw terminals which are in pluggable terminal blocks for ease of system assembly and reconfiguration.

The modules have excellent stability over time and do not require recalibration, however, zero and span settings are adjustable up to ±5% to accommodate situations where fine-tuning is desired. The adjustments are made using potentiometers located under the front panel label and are non-interactive for ease of use.

Features

- Accepts Process Loop Signals
- Industry Standard Output of 0 to +10V, 2 to +10V, 0 to 20mA, or 4 to 20mA
- Provides Isolated Loop Excitation
- 1500Vrms Transformer Isolation
- ANSI/IEEE C37.90.1 Transient Protection
- Input Protection to 240VAC Continuous
- True 3-Way Isolation
- Wide Range of Supply Voltage
- 105dB CMR
- 5 Poles of Filtering
- ±0.03% Accuracy
- ±0.01% Linearity
- Easily Mounts on Standard DIN Rail
- C-UL-US Listed
- CE and ATEX Compliant

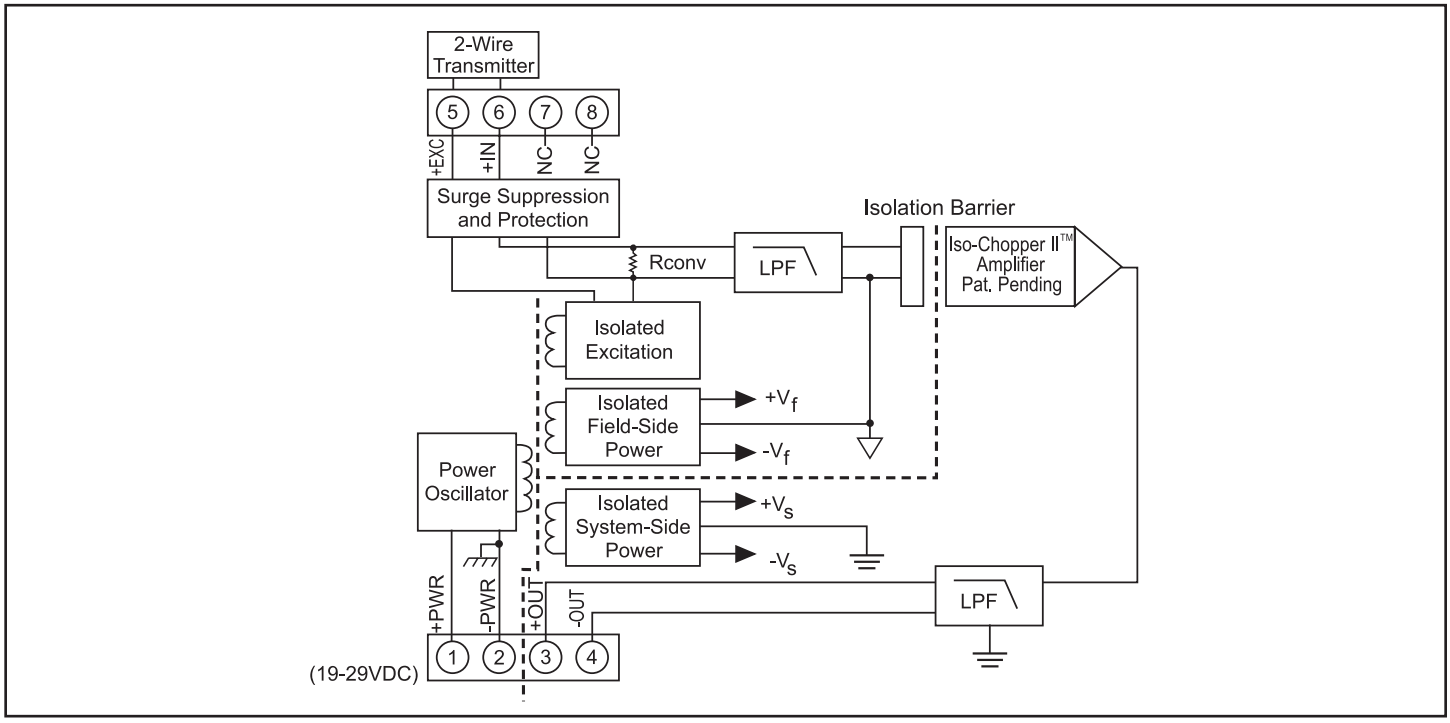

Figure 1: DSCA42 Block Diagram

©1995-2017 Dataforth Corporation, All Rights Reserved ISO9001:2008-Registered QMS

Specifications

Typical* at T_A = +25°C and +24VDC supply voltage

Module	DSCA42
Input Range	4-20mA
Input Resistance	
Normal	<100Ω
Power Off	<100Ω
Overload	65kΩ
Input Protection	
Continuous	240Vrms max
Transient	ANSI/IEEE C37.90.1
Loop Supply Voltage	+20VDC
Isolated Excitation Protection	
Continuous	240Vrms max
Transient	ANSI/IEEE C37.90.1
Output Range	See Ordering Information
Load Resistance (I_{OUT})	600Ω max
Current Limit	8mA (V_{OUT}), 30mA (I_{OUT})
Output Protection	
Short to Ground	Continuous
Transient	ANSI/IEEE C37.90.1
CMV, Input to Output, Input to Power	
Continuous	1500Vrms max
Transient	ANSI/IEEE C37.90.1
CMV, Output to Power	
Continuous	50VDC max
CMR (50Hz or 60Hz)	105dB
Accuracy(1)	±0.03% Span
Linearity	±0.01% Span
Adjustability	±5% Zero and Span
Stability	
Offset	±6ppm/°C (V_{OUT}), ±20ppm/°C (I_{OUT})
Gain	±40ppm/°C
Output Noise, 100kHz Bandwidth	300µVrms (V_{OUT}), 1.5µArms (I_{OUT})
Bandwidth, –3dB	100Hz
NMR (-3dB at 100Hz)	100dB per Decade above 100Hz
Response Time, 90% Span	5ms
Power Supply	
Voltage	19 to 29VDC
Current	60mA (V_{OUT}), 80mA (I_{OUT})
Sensitivity	±0.0002%/%
Protection	
Reverse Polarity	Continuous
Transient	ANSI/IEEE C37.90.1
Mechanical Dimensions (h)(w)(d)	2.95" x 0.89" x 4.13" (75mm x 22.5mm x 105mm)
Mounting	DIN EN 50022 -35x7.5 or -35x15 rail
Environmental	
Operating Temperature Range	–40°C to +80°C
Storage Temperature Range	–40°C to +80°C
Relative Humidity	0 to 95% Noncondensing
Emissions EN61000-6-4	ISM, Group 1
Radiated, Conducted	Class A
Immunity EN61000-6-2	ISM, Group 1
RF	Performance A ±0.5% Span Error
ESD, EFT	Performance B

NOTES:
*Contact factory or your local Dataforth sales office for maximum values.
(1) Includes linearity, hysteresis and repeatability.

Ordering Information

Model	Input Range	Output Range
DSCA42-01	4mA to 20mA	0V to +10V
DSCA42-02	4mA to 20mA	2V to +10V
DSCA42-01C	4mA to 20mA	4 to 20mA
DSCA42-01E	4mA to 20mA	0 to 20mA

Installation Notes:

1.) This Equipment is Suitable for Use in Class I, Division 2, Groups A, B,C, D, or Non-Hazardous Locations Only.

2.) WARNING - Explosion Hazard - Substitution of Components May Impair Suitability for Class I, Division 2.

3.) WARNING - Explosion Hazard - Do Not Disconnect Equipment Unless Power Has Been Switched Off or The Area is Known to be Non-Hazardous.

4.) The Power to These Devices Shall Be Limited By an Over-Current Protection Device, UL Certified Fuse (JDYX/JDYX2) Rated 6A Max.

©1995-2017 Dataforth Corporation, All Rights Reserved ISO9001:2008-Registered QMS

DSCA43

General Purpose Input Signal Conditioners, with DC Excitation

Description

Each DSCA43 general purpose input module provides a single channel of transducer input which is filtered, isolated, amplified, and converted to a high-level voltage output (Figure 1). Signal filtering is accomplished with a fivepole filter which is optimized for step response. An anti-aliasing pole is located on the field side of the isolation barrier, and the other four poles are on the system side. After the initial field-side filtering, the input signal is chopped by a proprietary chopper circuit. Isolation is provided by transformer coupling, again using a proprietary technique to suppress transmission of common mode spikes or surges.

Transducer excitation is provided from the module by a stable 10V source. This source is fully isolated, allowing the amplifier inputs to operate over the full range of the excitation voltage. This feature enables the module to be interfaced to a wide variety of sensors requiring exctitation.

Module output is either voltage or current. For current output models a dedicated loop supply is provided at terminal 3 (+OUT) with loop return located at terminal 4 (-OUT). The system-side load may be either floating or grounded.

Special input circuits provide signal input and excitation protection against accidental connection of power-line voltages up to 240VAC and against transient events as defined by ANSI/IEEE C37.90.1. Protection circuits are also present on the signal output and power input terminals to guard against transient events and power reversal. Signal and power lines are secured to the module using screw terminals which are in pluggable terminal blocks for ease of system assembly and reconfiguration.

The modules have excellent stability over time and do not require recalibration, however, zero and span settings are adjustable up to ±5% to accommodate situations where fine-tuning is desired. The adjustments are made using potentiometers located under the front panel label and are non-interactive for ease of use.

Features

- Interfaces to Transducers and Other Devices Requiring a Stable, Isolated DC Supply
- Industry Standard Output of 0 to +10V, ±10V, 0 to 20mA, or 4 to 20mA
- 1500Vrms Transformer Isolation
- ANSI/IEEE C37.90.1 Transient Protection
- Input Protected to 240VAC Continuous
- True 3-Way Isolation
- Wide Range of Supply Voltage
- 100dB CMR
- Fully Isolated Excitation Supply
- ±0.03% Accuracy
- ±0.01% Linearity
- Easily Mounts on Standard DIN Rail
- C-UL-US Listed
- CE and ATEX Compliant

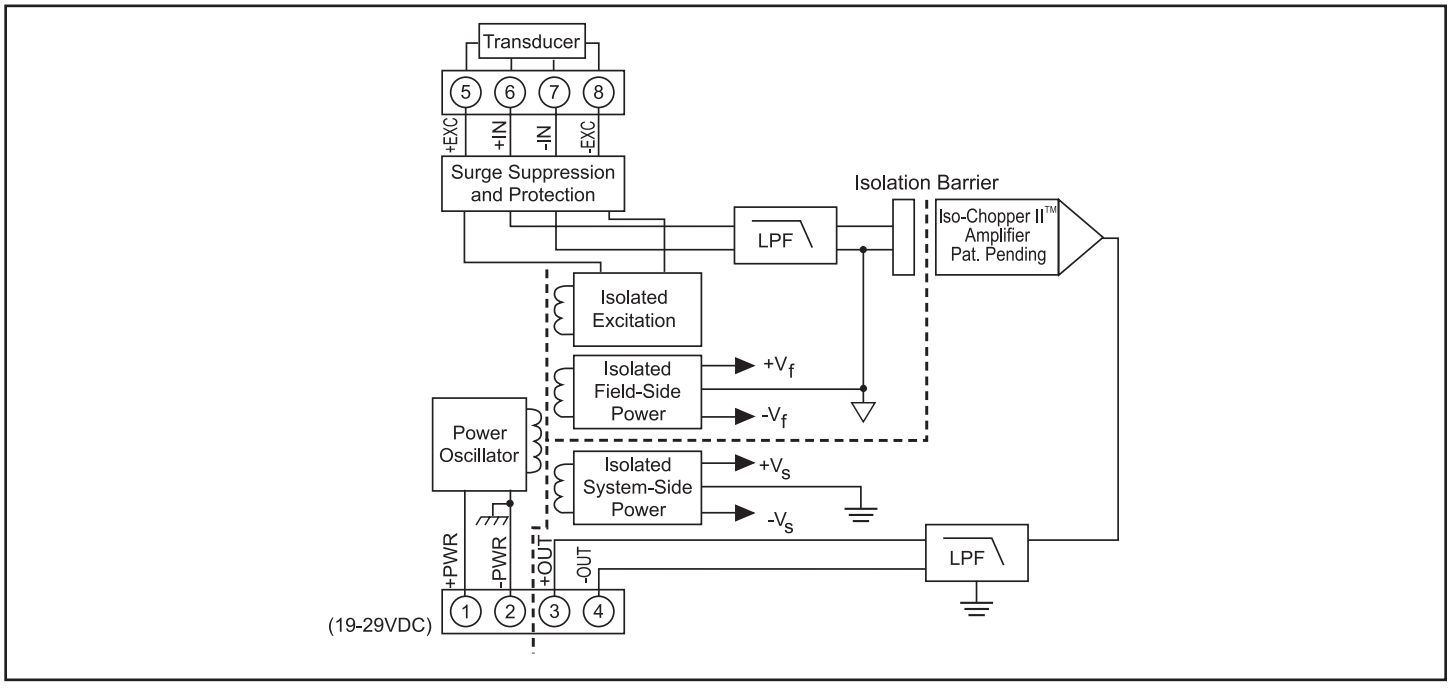

Figure 1: DSCA43 Block Diagram

©1995-2017 Dataforth Corporation, All Rights Reserved ISO9001:2008-Registered QMS

Specifications

Typical* at T_A = +25°C and +24VDC supply voltage

Module	DSCA43
Input Range	±1V to ±10V
Input Bias Current	±0.05nA
Input Resistance	
Normal	>500kΩ
Power Off	>500kΩ
Overload	>500kΩ
Signal Input Protection	
Continuous	240Vrms max
Transient	ANSI/IEEE C37.90.1
Excitation	
Output Voltage (–EXC to +EXC)	10V ± 0.03%
Output Current	40mA maximum
Load Regulation	±5ppm/mA
Stability	±15ppm/°C
Protection	
Continuous	240Vrms max
Transient	ANSI/IEEE C37.90.1
Output Range	See Ordering Information
Load Resistance (I_{OUT})	600Ω max
Current Limit	8mA (V_{OUT}), 30mA (I_{OUT})
Output Protection	
Short to Ground	Continuous
Transient	ANSI/IEEE C37.90.1
CMV, Input to Output, Input to Power	
Continuous	1500Vrms max
Transient	ANSI/IEEE C37.90.1
CMV, Output to Power	
Continuous	50VDC max
CMR (50Hz or 60Hz)	100dB
Accuracy(1)	±0.03% Span
Linearity	±0.01% Span
Adjustability	±5% Zero and Span
Stability	
Input Offset	±5µV/°C
Output Offset	±6ppm/°C (V_{OUT}), ±20ppm/°C (I_{OUT})
Gain	±55ppm/°C
Output Noise, 100kHz Bandwidth	500µVrms (V_{OUT}), 2µArms (I_{OUT})
Bandwidth, –3dB	3kHz
NMR	100dB per Decade above 3kHz
Response Time, 90% Span	170µs
Power Supply	
Voltage	19 to 29VDC
Current	60mA (V_{OUT}), 80mA (I_{OUT})
Sensitivity	+0.0002%/%
Protection	
Reverse Polarity	Continuous
Transient	ANSI/IEEE C37.90.1
Mechanical Dimensions (h)(w)(d)	2.95" x 0.89" x 4.13" (75mm x 22.5mm x 105mm)
Mounting	DIN EN 50022 -35x7.5 or -35x15 rail
Environmental	
Operating Temperature Range	–40°C to +80°C
Storage Temperature Range	–40°C to +80°C
Relative Humidity	0 to 95% Noncondensing
Emissions EN61000-6-4	ISM, Group 1
Radiated, Conducted	Class A
Immunity EN61000-6-2	ISM, Group 1
RF	Performance A ±0.5% Span Error
ESD, EFT	Performance B

NOTES:
*Contact factory or your local Dataforth sales office for maximum values.
(1) Includes linearity, hysteresis and repeatability.

Ordering Information

Model	Input Range	Output Range †
DSCA43-01	–1V to +1V	1
DSCA43-02	–2V to +2V	1
DSCA43-03	–3V to +3V	1
DSCA43-04	–4V to +4V	1
DSCA43-05	–5V to +5V	1
DSCA43-06	–6V to +6V	1
DSCA43-07	–7V to +7V	1
DSCA43-08	–8V to +8V	1
DSCA43-09	–9V to +9V	1
DSCA43-10	–10V to +10V	1
DSCA43-11	–1V to +1V	2, 3, 4
DSCA43-12	–2V to +2V	2, 3, 4
DSCA43-13	–3V to +3V	2, 3, 4
DSCA43-14	–4V to +4V	2, 3, 4
DSCA43-15	–5V to +5V	2, 3, 4
DSCA43-16	–6V to +6V	2, 3, 4
DSCA43-17	–7V to +7V	2, 3, 4
DSCA43-18	–8V to +8V	2, 3, 4
DSCA43-19	–9V to +9V	2, 3, 4
DSCA43-20	–10V to +10V	2, 3, 4

†Output Ranges Available

Output Range	Part No. Suffix	Example
1. –10V to +10V	NONE	DSCA43-01
2. 0V to +10V	NONE	DSCA43-11
3. 4 to 20mA	C	DSCA43-11C
4. 0 to 20mA	E	DSCA43-11E

Installation Notes:

1.) This Equipment is Suitable for Use in Class I, Division 2, Groups A, B,C, D, or Non-Hazardous Locations Only.

2.) WARNING - Explosion Hazard - Substitution of Components May Impair Suitability for Class I, Division 2.

3.) WARNING - Explosion Hazard - Do Not Disconnect Equipment Unless Power Has Been Switched Off or The Area is Known to be Non-Hazardous.

4.) The Power to These Devices Shall Be Limited By an Over-Current Protection Device, UL Certified Fuse (JDYX/JDYX2) Rated 6A Max.

©1995-2017 Dataforth Corporation, All Rights Reserved ISO9001:2008-Registered QMS

DSCA45

Frequency Input Signal Conditioners

Description

Each DSCA45 frequency input module provides a single channel of frequency input which is isolated and converted to a standard analog voltage or current output (Figure 1).

The frequency input signal can be a TTL level or zero-crossing signal. Terminal 7 (-IN) on the field-side terminal block is the "common" or ground connection for input signals. A TTL signal is connected from terminal 6 (+IN) to terminal 7 (-IN), while a zero-crossing signal is connected from terminal 5 (+EXC) to terminal 7 (-IN). Input circuitry for each of the signal types has hysteresis built in. An input signal must cross entirely through the hysteresis region in order to trigger the threshold comparator.

A +5.1V excitation is available for use with magnetic pick-up or contact-closure type sensors. The excitation is available on terminal 8 (-EXC) with return at terminal 7 (-IN).

Module output is either voltage or current. For current output models a dedicated loop supply is provided at terminal 3 (+OUT) with loop return located at terminal 4 (-OUT). The system-side load may be either floating or grounded.

Special input circuits provide protection against accidental connection of powerline voltages up to 240VAC and against transient events as defined by ANSI/ IEEE C37.90.1. Protection circuits are also present on the signal output and power input terminals to guard against transient events and power reversal. Signal and power lines are secured to the module using screw terminals which are pluggable terminal blocks for ease of system assembly and reconfiguration.

DSCA45 modules have excellent stability over time and do not require recalibration, however, both zero and span settings are adjustable to accommodate situations where fine tuning is desired. The adjustments are made using potentiometers located under the front panel label and are non-interactive for ease of use.

Features

- Accepts Frequency Inputs of 0 to 100kHz
- Industry Standard Output of 0 to +10V, 0 to 20mA, or 4 to 20mA
- ±0.05% Factory Calibrated Accuracy
- Adjustable Zero (±5%) and Span (±5%)
- 1500Vrms Transformer Isolation
- Input Overload Protected to 240VAC Continuous
- 120dB CMR
- ANSI/IEEE C37.90.1 Transient Protection
- Mounts on Standard DIN Rail
- C-UL-US Listed
- CE and ATEX Compliant

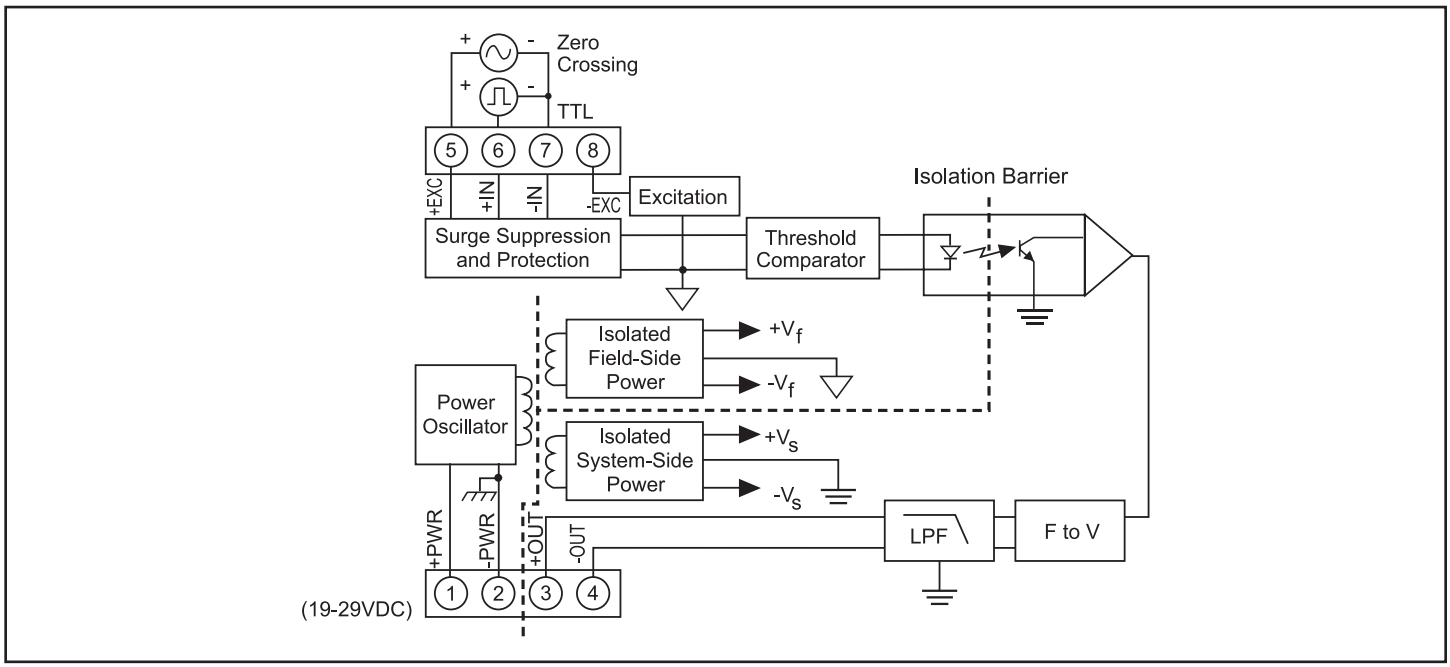

Figure 1: DSCA45 Block Diagram

©1995-2017 Dataforth Corporation, All Rights Reserved ISO9001:2008-Registered QMS

Specifications

Typical* at T_A = +25°C and +24VDC supply voltage

Module	DSCA45
Input	
Range	0 to 100kHz max
Threshold	Zero Crossing
Minimum Input	60mVp-p
Maximum Input	350Vp-p
Minimum Pulse Width	4µs
TTL Input Low	0.8V max
TTL Input High	2.4V min
Hysteresis	
Zero Crossing	40mV
TTL	1.5V
Resistance	100kΩ
Protection	
Continuous	240Vrms max
Transient	ANSI/IEEE C37.90.1
Output Range	See Ordering Information
Adjustability	±5% Zero & Span
Load Resistance (I_{OUT})	600Ω max.
Current Limit	8mA (V_{OUT}), 30mA (I_{OUT})
Output Protection	
Short to Ground	Continuous
Transient	ANSI/IEEE C37.90.1
Ripple	<0.20% Span at input >2% Span
Accuracy(1)	±0.05% Span
vs. Temperature	±40ppm/°C (Zero & Span)
Linearity	±0.02% Span
Isolation (Common Mode)	
Input to Output, Input to Power	
Continuous	1500Vrms max
Transient	ANSI/IEEE C37.90.1
Output to Power	
Continuous	50VDC max
Rejection (50-60Hz Common Mode)	120dB
Response Time (0 to 90%)	
DSCA45-01, -02, -03	310ms, 175ms, 50ms
DSCA45-04, -05, -06	30ms, 30ms, 15ms
DSCA45-07, -08	15ms, 1.5ms
Field Excitation	+5.1V ±5% at 8mA max
Power Supply	
Voltage	19 to 29VDC
Current	60mA (V_{OUT}), 80mA (I_{OUT})
Sensitivity	±0.0002%/%
Protection	
Reverse Polarity	Continuous
Transient	ANSI/IEEE C37.90.1
Mechanical Dimensions (h)(w)(d)	2.95" x 0.89" x 4.13" (75mm x 22.5mm x 105mm)
Mounting	DIN EN50022 -35x7.5 or -35x15 rail
Environmental	
Operating Temp. Range	–40°C to +80°C
Storage Temp. Range	–40°C to +80°C
Relative Humidity	0 to 95% Noncondensing
Emissions EN61000-6-4	ISM, Group 1
Radiated, Conducted	Class A
Immunity EN61000-6-2	ISM, Group 1
RF	Performance A ±0.5% Span Error
ESD,EFT	Performance B

NOTES:
*Contact factory or your local Dataforth sales office for maximum values.
(1) Includes linearity, hysteresis and repeatability.

Ordering Information

Model	Input Range	Output Range†
DSCA45-01	0Hz to 500Hz	2, 3, 4
DSCA45-02	0kHz to 1kHz	2, 3, 4
DSCA45-03	0kHz to 2.5kHz	2, 3, 4
DSCA45-04	0kHz to 5kHz	2, 3, 4
DSCA45-05	0kHz to 10kHz	2, 3, 4
DSCA45-06	0kHz to 25kHz	2, 3, 4
DSCA45-07	0kHz to 50kHz	2, 3, 4
DSCA45-08	0kHz to 100kHz	2, 3, 4

†Output Ranges Available

Output Range	Part No. Suffix	Example
1. –10V to +10V	NONE	N/A
2. 0V to +10V	NONE	DSCA45-01
3. 4 to 20mA	C	DSCA45-01C
4. 0 to 20mA	E	DSCA45-01E

Installation Notes:

1.) This Equipment is Suitable for Use in Class I, Division 2, Groups A, B,C, D, or Non-Hazardous Locations Only.

2.) WARNING - Explosion Hazard - Substitution of Components May Impair Suitability for Class I, Division 2.

3.) WARNING - Explosion Hazard - Do Not Disconnect Equipment Unless Power Has Been Switched Off or The Area is Known to be Non-Hazardous.

4.) The Power to These Devices Shall Be Limited By an Over-Current Protection Device, UL Certified Fuse (JDYX/JDYX2) Rated 6A Max.

©1995-2017 Dataforth Corporation, All Rights Reserved ISO9001:2008-Registered QMS

DSCA47

Linearized Thermocouple Input Signal Conditioners

Description

Each DSCA47 thermocouple input module provides a single channel of thermocouple input which is filtered, isolated, amplified, linearized, and converted to a high-level voltage output (Figure 1). Signal filtering is accomplished with a fivepole filter which provides 85dB of normal-mode rejection at 60Hz and 80dB at 50Hz. An anti-aliasing pole is located on the field side of the isolation barrier, and the other four poles are on the system side. After the initial field-side filtering, the input signal is chopped by a proprietary chopper circuit. Isolation is provided by transformer coupling, again using a proprietary technique to suppress transmission of common mode spikes or surges.

The DSCA47 can interface to eight industry standard thermocouple types: J, K, T, E, R, S, B and N. Each module has cold junction compensation to correct for parasitic thermocouples formed by the thermocouple wire and input screw terminals on the module. Upscale open thermocouple detection is provided by internal circuitry. Downscale indication can be implemented by installing a 47MW, ±20% resistor between screw terminals 6 and 8 on the input terminal block.

Module output is either voltage or current. For current output models a dedicated loop supply is provided at terminal 3 (+OUT) with loop return located at terminal 4 (-OUT). The system-side load may be either floating or grounded.

Special input circuits provide protection against accidental connection of powerline voltages up to 240VAC and against transient events as defined by ANSI/ IEEE C37.90.1. Protection circuits are also present on the signal output and power input terminals to guard against transient events and power reversal. Power lines are secured to the module using screw terminals which are in pluggable terminal blocks for ease of system assembly and reconfiguration.

The modules have excellent stability over time and do not require recalibration, however, zero and span settings are adjustable up to ±3% to accommodate situations where fine-tuning is desired. The adjustments are made using potentiometers located under the front panel label and are non-interactive for ease of use.

Features

- Interfaces to Types J, K, T, E, R, S, B, and N Thermocouples
- Linearizes Thermocouple Signal
- Industry Standard Output of 0 to +10V, 0 to 20mA, or 4 to 20mA
- 1500Vrms Transformer Isolation
- ANSI/IEEE C37.90.1 Transient Protection
- Input Protected to 240VAC Continuous
- True 3-Way Isolation
- Wide Range of Supply Voltage
- 160dB CMR
- 85dB NMR at 60Hz, 80dB at 50Hz
- ±0.08% Accuracy
- Easily Mounts on Standard DIN Rail
- C-UL-US Listed
- CE and ATEX Compliant

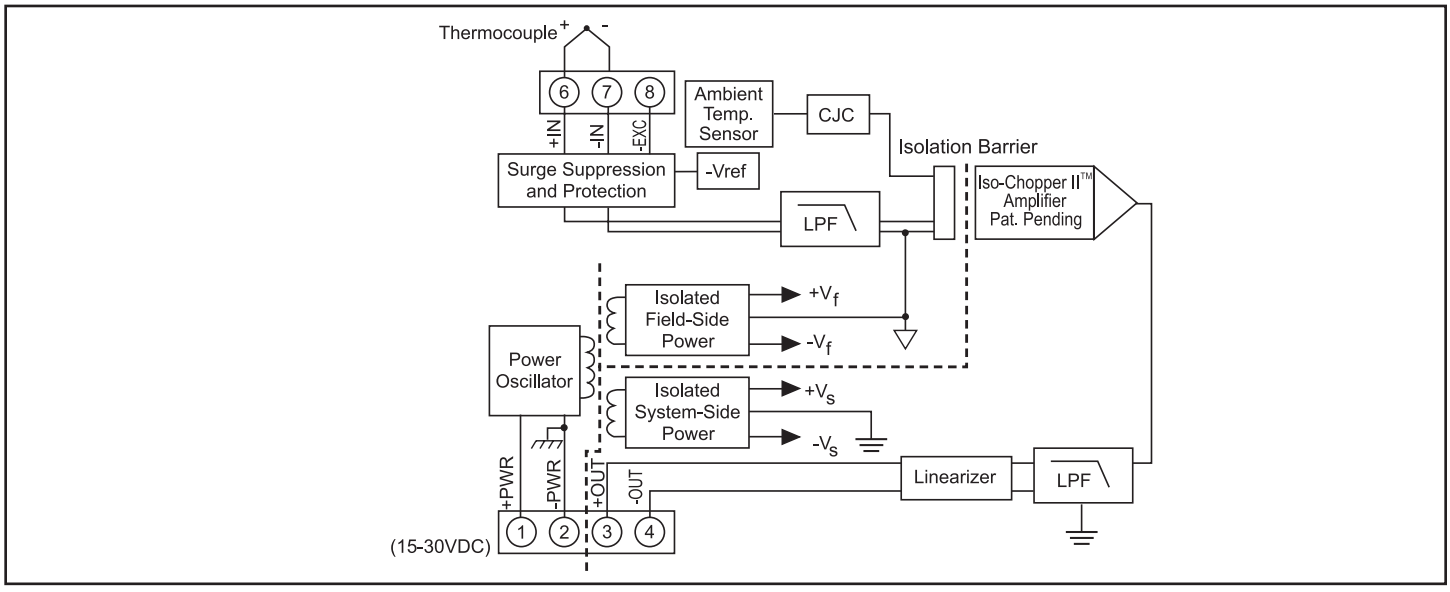

Figure 1: DSCA47 Block Diagram

©1995-2017 Dataforth Corporation, All Rights Reserved ISO9001:2008-Registered QMS

Specifications

Typical* at T_A = +25°C and +24VDC supply voltage

Module	DSCA47
Input Range	Standard thermocouple temperature limits as per NIST monograph 175, ITS-90
Input Bias Current	–30nA
Input Resistance	
Normal	50MΩ
Power Off	65kΩ
Overload	65kΩ
Input Protection	
Continuous	240Vrms max
Transient	ANSI/IEEE C37.90.1
Cold Junction Compensation	
Accuracy, +5°C to +45°C	±0.5°C
Accuracy, –40°C to +80°C	±1.25°C
Output Range	See Ordering Information
Load Resistance (I_{OUT})	600Ω
Current Limit	8mA (V_{OUT}), 30mA (I_{OUT})
Output Protection	
Short to Ground	Continuous
Transient	ANSI/IEEE C37.90.1
CMV, Input to Output, Input to Power	
Continuous	1500Vrms max
Transient	ANSI/IEEE C37.90.1
CMV, Output to Power	
Continuous	50VDC max
CMR (50Hz or 60Hz)	160dB
Accuracy	See Ordering Information Below
Adjustability	±3% Zero and Span
Stability	
Input Offset	±0.5µV/°C
Output Offset	±6ppm/°C (V_{OUT}), ±20ppm/°C (I_{OUT})
Gain	±40ppm/°C
Output Noise, 100kHz Bandwidth	250µVrms (V_{OUT}), 1µArms (I_{OUT})
Bandwidth, –3dB	3Hz
NMR	95dB at 60Hz, 85dB at 50Hz
Response Time, 90% Span	165ms
Open Input Response	Upscale
Open Input Detection Time	<5s
Power Supply	
Voltage	15 to 30VDC
Current	25mA (V_{OUT}), 55mA (I_{OUT})
Sensitivity	±0.0001%/%
Protection	
Reverse Polarity	Continuous
Transient	ANSI/IEEE C37.90.1
Mechanical Dimensions (h)(w)(d)	2.95" x 0.89" x 4.13" (75mm x 22.5mm x 105mm)
Mounting	DIN EN 50022 -35x7.5 or -35x15 rail
Environmental	
Operating Temperature Range	–40°C to +80°C
Storage Temperature Range	–40°C to +80°C
Relative Humidity	0 to 95% Noncondensing
Emissions EN61000-6-4	ISM, Group 1
Radiated, Conducted	Class A
Immunity EN61000-6-2	ISM, Group 1
RF	Performance A ±0.5% Span Error
ESD, EFT	Performance B

NOTES:
*Contact factory or your local Dataforth sales office for maximum values.
(1) Includes conformity, hysteresis, repeatability, and CJC error.

Installation Notes:
1.) This Equipment is Suitable for Use in Class I, Division 2, Groups A, B, C, D, or Non-Hazardous Locations Only.
2.) WARNING - Explosion Hazard - Substitution of Components May Impair Suitability for Class I, Division 2.
3.) WARNING - Explosion Hazard - Do Not Disconnect Equipment Unless Power Has Been Switched Off or The Area is Known to be Non-Hazardous.
4.) The Power to These Devices Shall Be Limited By an Over-Current Protection Device, UL Certified Fuse (JDYX/JDYX2) Rated 6A Max.

Ordering Information

Model	TC Type‡	Input Range	Output Range	Accuracy(1)	
DSCA47J-01	J	0°C to +760°C (+32°F to +1400°F)	2, 3, 4	±0.08%	±0.61°C
DSCA47J-02	J	–100°C to +300°C (–148°F to +572°F)	2, 3, 4	±0.08%	±0.32°C
DSCA47J-03	J	0°C to +500°C (+32°F to +932°F)	2, 3, 4	±0.07%	±0.35°C
DSCA47K-04	K	0°C to +1000°C (+32°F to +1832°F)	2, 3, 4	±0.08%	±0.80°C
DSCA47K-05	K	0°C to +500°C (+32°F to +932°F)	2, 3, 4	±0.08%	±0.40°C
DSCA47K-13	K	–100°C to +1350°C (–148°F to +2462°F)	2, 3, 4	±0.08%	±1.16°C
DSCA47K-14	K	0°C to +1200°C (+32°F to +2192°F)	2, 3, 4	±0.08%	±0.96°C
DSCA47T-06	T	–100°C to +400°C (–148°F to +752°F)	2, 3, 4	±0.16%	±0.80°C
DSCA47T-07	T	0°C to +200°C (+32°F to +392°F)	2, 3, 4	±0.13%	±0.26°C
DSCA47E-08	E	0°C to +1000°C (+32°F to +1832°F)	2, 3, 4	±0.10%	±1.00°C
DSCA47R-09	R	+500°C to +1750°C (+932°F to +3182°F)	2, 3, 4	±0.10%	±1.25°C
DSCA47S-10	S	+500°C to +1750°C (+932°F to +3182°F)	2, 3, 4	±0.10%	±1.25°C
DSCA47B-11	B	+500°C to +1800°C (+932°F to +3272°F)	2, 3, 4	±0.15%	±1.95°C
DSCA47N-15	N	–100°C to +1300°C (–148°F to +2372°F)	2, 3, 4	±0.08%	±1.12°C

†Output Ranges Available

Output Range	Part No. Suffix	Example
1. –10V to +10V	NONE	N/A
2. 0V to +10V	NONE	DSCA47J-01
3. 4 to 20mA	C	DSCA47J-01C
4. 0 to 20mA	E	DSCA47J-01E

‡Thermocouple Alloy Combinations

Standards: DIN IEC 584, ANSI MC96-1-82, JIS C 1602-1981

Type	Material
J	Iron vs. Copper-Nickel
K	Nickel-Chromium vs. Nickel-Aluminum
T	Copper vs. Copper-Nickel
E	Nickel-Chromium vs. Copper-Nickel
R	Platinum-13% Rhodium vs. Platinum
S	Platinum-10% Rhodium vs. Platinum
B	Platinum-30% Rhodium vs. Platinum-6% Rhodium
N	Nickel-14.2% Chromium-1.4% Silicon vs. Nickel-4.4% Silicon- 0.1% Magnesium

©1995-2017 Dataforth Corporation, All Rights Reserved ISO9001:2008-Registered QMS

DSCA49

Voltage Output Signal Conditioners

Description

Each DSCA49 voltage output module provides a single channel of analog output. The input signal is buffered, isolated, filtered and converted to a voltage output (Figure 1). Signal filtering is accomplished with a five-pole filter which provides 100dB per decade of attenuation above 1kHz. An anti-aliasing pole is located on the system side of the isolation barrier, and the other four poles are on the field side. After the initial system-side filtering, the input signal is chopped by a proprietary chopper circuit. Isolation is provided by transformer coupling, again using a proprietary technique to suppress transmission of common mode spikes or surges.

Special output circuits provide protection against accidental connection of power-line voltages up to 240VAC and against transient events as defined by ANSI/IEEE C37.90.1. Protection circuits are also present on the signal input and power input terminals to guard against transient events and power reversal. Signal and power lines are secured to the module using screw terminals which are in pluggable terminal blocks for ease of system assembly and reconfiguration.

The modules have excellent stability over time and do not require recalibration, however, zero and span settings are adjustable up to ±5% to accommodate situations where fine-tuning is desired. The adjustments are made using potentiometers located under the front panel label and are non-interactive for ease of use.

Features

- Accepts High-Level Voltage Input
- Provides High-Level Voltage Outputs to ±10V at 50mA
- ANSI/IEEE C37.90.1
- 1500Vrms Transformer Isolation
- ±0.05% Accuracy
- ±0.02% Linearity
- Output Protected to 240VAC Continuous
- True 3-Way Isolation
- Wide Range of Supply Voltage
- 110dB CMR
- Easily Mounts on Standard DIN Rail
- C-UL-US Listed
- CE and ATEX Compliant

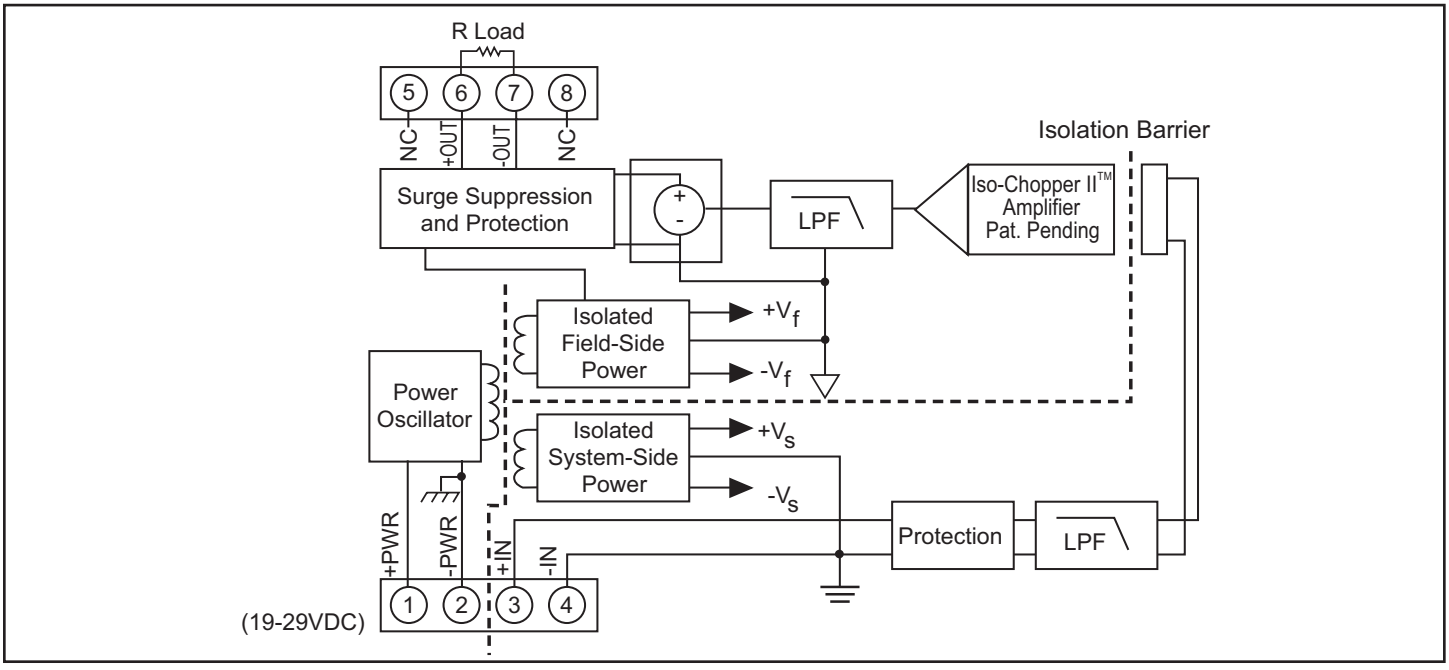

Figure 1: DSCA49 Block Diagram

©1995-2017 Dataforth Corporation, All Rights Reserved ISO9001:2008-Registered QMS

Specifications

Typical* at T_A = +25°C and +24VDC supply voltage

Module	DSCA49-04, -05, -06
Output Range	0 to +10V or –10 to +10V
Over Range Capability	5%
Output Drive	±50mA max.
Output Resistance	0.5Ω
Output Current Limit	75mA
Output Protection	
Continuous	240Vrms max
Transient	ANSI/IEEE C37.90.1
Input Range	0V to +10V or –10V to +10V
Input Resistance	
Normal	50MΩ
Power Off	65kΩ
Overload	65kΩ
Input Protection	
Continuous	±35V max
Transient	ANSI/IEEE C37.90.1
CMV, Output to Input, Output to Power	
Continuous	1500Vrms max
Transient	ANSI/IEEE C37.90.1
CMV, Input to Power	
Continuous	50VDC max
CMR (50Hz or 60Hz)	110dB
Accuracy(1)	±0.05% Span
Linearity	±0.02% Span
Adjustability	±5% Zero and Span
Stability	
Zero	±20ppm/°C
Span	±40ppm/°C
Output Noise, 100kHz Bandwidth	2mVrms
Bandwidth, –3dB	1kHz
NMR	100dB per Decade above 1kHz
Response Time, 90% Span	425µs
Power Supply	
Voltage	19 to 29VDC
Current	80mA
Sensitivity	±0.0003%/%
Protection	
Reverse Polarity	Continuous
Transient	ANSI/IEEE C37.90.1
Mechanical Dimensions (h)(w)(d)	2.95" x 0.89" x 4.13" (75mm x 22.5mm x 105mm)
Mounting	DIN EN 50022 -35x7.5 rail
Environmental	
Operating Temperature Range	–40°C to +80°C
ATEX Group II, Category 3	–40°C to +75°C
Storage Temperature Range	–40°C to +80°C
Relative Humidity	0 to 95% Noncondensing
Emissions EN61000-6-4	ISM, Group 1
Radiated, Conducted	Class A
Immunity EN61000-6-2	ISM, Group 1
RF	Performance A ±0.5% Span Error
ESD, EFT	Performance B

NOTES:
*Contact factory or your local Dataforth sales office for maximum values.
(1) Includes linearity, hysteresis and repeatability.

Ordering Information

Model	Input Range	Output Range
DSCA49-04	0V to +10V	–10V to +10V
DSCA49-05	–10V to +10V	–10V to +10V
DSCA49-06	–10V to +10V	0V to +10V

Installation Notes:

1.) This Equipment is Suitable for Use in Class I, Division 2, Groups A, B,C, D, or Non-Hazardous Locations Only.

2.) WARNING - Explosion Hazard - Substitution of Components May Impair Suitability for Class I, Division 2.

3.) WARNING - Explosion Hazard - Do Not Disconnect Equipment Unless Power Has Been Switched Off or The Area is Known to be Non-Hazardous.

4.) The Power to These Devices Shall Be Limited By an Over-Current Protection Device, UL Certified Fuse (JDYX/JDYX2) Rated 6A Max.

©1995-2017 Dataforth Corporation, All Rights Reserved ISO9001:2008-Registered QMS

PWR-PS5RxW Series

Switching Power Supplies

Description

Dataforth's PWR-PS5RxW series sets new standards for switching power supply technology. Combining rugged, compact enclosures, incorporating all international standards and approvals, and offering customers a broad selection of inputs and outputs, the PWR-PS5RxW series makes your power supply choice a simple one. The PWR-PS5RxW series is UL, C-UL and TUV Approved, CE Compliant, and UL 508 Listed. Models are available with output ratings from 7.5W to 120W with 24VDC output voltages. Customers may choose from a wide range of input voltages (85 to 264VAC, and 100 to 370VDC compatible), making the PWR-PS5RxW series an unbeatable package of versatility.

Features

- Universal AC Input (85 to 264VAC)
- DC Compatible Input (100 to 370VDC)
- Unique Spring-Up Terminals
- DIN Rail or Panel Mount
- Five Different Output Capacities: 7.5W to 120W
- UL, C-UL, and TUV Approvals
- CE Compliant, UL 508 Listed
- Certified to EN60950-1
- IP20 Protection (EN60529)
- Compliant with EMC Directive EN61204-3

Specifications PWR-PS5RxW Series Typical at T_A =+25°C

Model	PWR-PS5R7W	PWR-PS5R15W	PWR-PS5R30W	PWR-PS5R60W	PWR-PS5R120W
Input	100 to 240VAC nominal; 85 to 264VAC, 100 to 370VDC compatible				
Frequency	50/60Hz				
Input Current	0.18A at 100V 0.10A at 200V	0.35A at 100V 0.19A at 200V	0.70A at 100V 0.30A at 200V	1.30A at 100V 0.80A at 200V	1.40A at 100V 0.70A at 200V
Output Voltage & Current Ratings	24V, 0.3A	24V, 0.65A	24V, 1.3A	24V, 2.5A	24V, 5.0A
Temperature Change	0.05%				
Ripple Voltage	1% p-p maximum (including noise)				
Overcurrent Protection	105% minimum				
Dielectric Strength	Between input and output terminals: 3,000VAC, 1 minute Between input terminals and housing: 2,000VAC, 1 minute Between output terminal and housing: 500VAC, 1 minute				
Insulation Resistance	Between input and output terminals/input terminal and housing: 100MΩ minimum (500VDC megger)				
Operating Temperature	–25°C to +75°C		-25°C to +70°C		-25°C to +65°C
StorageTemperature	–25°C to +75°C				
Operating Humidity	20 to 90% RH (avoid condensation)				
Dimensions (h)(w)(d)	2.95" x 1.77" x 2.76" (75mm x 45mm x 70mm)	3.54" x 0.89" x 3.74" (90mm x 22.5mm x 95mm)		3.74" x 1.42" x 4.25" (95mm x 36mm x 108mm)	4.53" x 1.81" x 4.76" (115mm x 46mm x 121mm)
Terminal Screw	M3.5 Phillips screws in spring-up terminals				

Ordering Information

Model	Power	Output
PWR-PS5R7W	7.5W	24VDC/0.3A
PWR-PS5R15W	15W	24VDC/0.65A
PWR-PS5R30W	30W	24VDC/1.3A
PWR-PS5R60W	60W	24VDC/2.5A
PWR-PS5R120W	120W	24VDC/5.0A

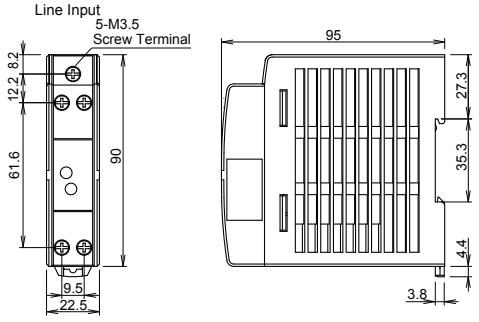

Figure 1: PWR-PS5R15W, PWR-PS5R30W Physical Dimensions
(Consult factory for other model drawings)

©1995-2017 Dataforth Corporation, All Rights Reserved ISO9001:2008-Registered QMS

DSCA

Module Dimensions

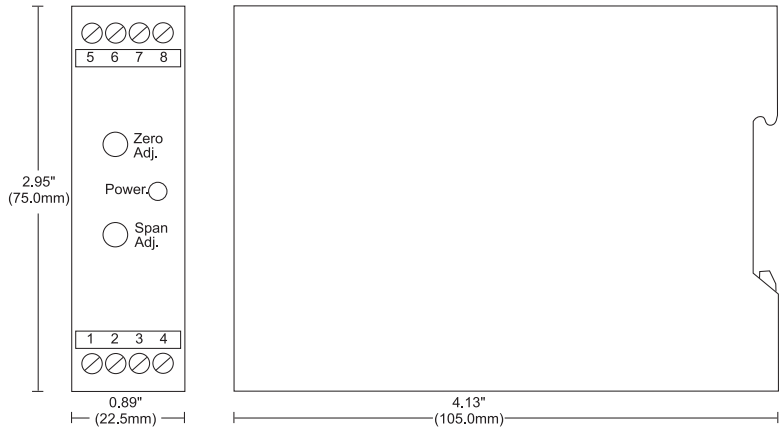

NOTES:
1) Pluggable terminal blocks accept wire sizes AWG 22-12. Strip wire insulation 0.27 in. (7mm) prior to insertion in terminal block.
2) DSCA modules can be mounted to DIN rails shown in Accessories section.

Accessories for DSCA Analog Modules

SCMXRAIL1-XX/SCMXRAIL3-XX

Din Rail

Description

Two styles of DIN rail are available. Specify length (-xx) in meters when ordering, -01 for 1 meter or -02 for 2 meter.

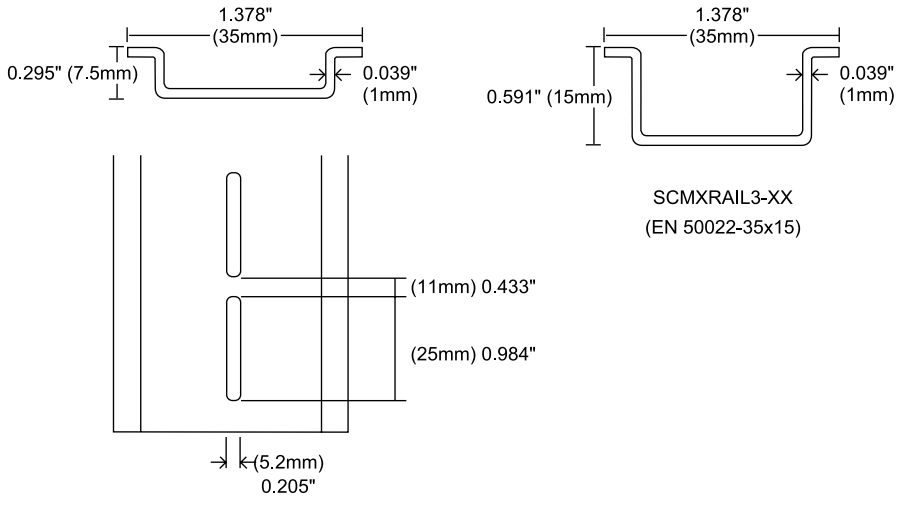

©1995-2017 Dataforth Corporation, All Rights Reserved ISO9001:2008-Registered QMS

DSCL and DSCP

Industrial Loop Isolators and Transmitters

Dataforth's DSCL and DSCP series of products is a complete family of loop and universal AC/DC powered isolators and transmitters in component, DIN and head-mount packages. They include basic loop-powered isolators, wide-range AC/DC powered isolators and transmitters, and fixed-gain or hardware and software configurable models. Depending on the model, they accept a wide range of voltage, current, thermocouple, or RTD input signals then filter, isolate, amplify, linearize, and convert these signals to high-level analog outputs suitable for use in data acquisition, test and measurement, and control system applications. They protect valuable measurement and control signals as well as connected equipment from the dangerous and degrading effects of noise, transient power surges, internal ground loops, and other hazards present in industrial environments.



Features

- Full Family of Loop Isolators and Transmitters
- Signal-Powered Passive Loop Isolator Models
- Wide Range 24 to 60V or 85 to 230V AC/DC Powered Models
- Jumper and Software Configurable Models
- 6.2mm Dip-switch Configurable Models
- 4000Vrms Isolation
- Multiple Channels per Package Available
- PCB, DIN Rail, Panel, and Instrument Head Mounting Options
- No Recalibration or Maintenance Required
- Fault Detection of Input Signal Available
- CE Compliant
- Manufactured per RoHS II Directive 2011/65/EU

©1995-2017 Dataforth Corporation, All Rights Reserved ISO9001:2008-Registered QMS

Loop Isolators and Transmitters Selection Guide

Characteristic	DSCL20	DSCL21	DSCL22	DSCL23	DSCL24 (Single Ch)	DSCL24 (Multi-Ch)	DSCP55
Channels per Module	1	1	1, 2, or 3	1 or 2	1	2	1
Mechanical Format	Component	DIN	DIN	DIN	DIN	DIN	DIN
Isolation Voltage Type	500Vrms Signal & Pwr	500Vrms Signal & Pwr	4000Vrms (1 ch) Signal & Pwr	2300Vrms 3-Way	2300Vrms 3-Way	2300Vrms 3-Way	1500Vrms Signal
Input Range from Field	0/4-20mA	0/4-20mA	0/4-20mA	4-20mA	Std/Jumper	Std/Factory	mV, V, mA, TC, RTD
Output Range to System	0/4-20mA	mA or V	mA or V	4-20mA	Std/Jumper	Std/Factory	mA
Output Split to 2 Channels	—	—	Yes	Yes	—	Yes	—
Accuracy	<±0.1%	<±0.1%	<±0.1%	<±0.2%	<±0.2%	<±0.2%	±0.1%
Bandwidth	750Hz	750Hz	500Hz	200Hz	15Hz	15Hz	1Hz
Load Range Current Voltage	0-600Ω —	0-600Ω >5MΩ	0-1000Ω >5MΩ	0-1000Ω —	0-600Ω >2kΩ	0-600Ω >2kΩ	500Ω 1kΩ
Power Supply	Passive	Passive	Passive	12-30VDC	Univ AC/DC Pwr	Univ AC/DC Pwr	Passive/DC Pwr
Dimensions (h x w x d)	0.8 x 0.4 x 1.6 in	2.9 x 0.5 x 1.9 in	see specs	see specs	4.7 x 0.7 x 5.7 in	4.7 x 0.7 x 5.7 in	3.67 x 0.24 x 4.04 in
Operating Temp Range	–20°C to +65°C	–20°C to +65°C	–25°C to +55°C	–25°C to +55°C	–25°C to +55°C	–25°C to +55°C	–20°C to +65°C

Configurable Transmitters Selection Guide

Characteristic	DSCP20	DSCP61	DSCP62	DSCP63	DSCP64	DSCP65	DSCP81
Channels per Module	1	1	1	1	1	1	1
Mechanical Format	DIN	DIN	DIN	DIN	DIN	DIN	DIN
Isolation Voltage Type	Nonisolated —	1500Vrms Signal	1500Vrms Signal	1500Vrms Signal	1500Vrms Signal	1500Vrms Signal	2300Vrms 3-Way
Input Range from Field	Configurable	RTD	TC	mA or V	mA or V for 2WTX	mV	Configurable
Output Range to System	Configurable	mA or V	mA or V	mA or V	mA or V	mA or V	Configurable
Accuracy	<±0.2%	±0.1%	±0.1%	±0.1%	±0.1%	±0.1%	<±0.2%
Bandwidth	Configurable	1Hz	1Hz	1Hz	1Hz	1Hz	Configurable
Load Range Current Voltage	0-900Ω —	500Ω 2kΩ	500Ω 2kΩ	500Ω 2kΩ	500Ω 2kΩ	500Ω 2kΩ	0-600Ω >2kΩ
Power Supply	Loop Power	19.2-30VDC	19.2-30VDC	19.2-30VDC	19.2-30VDC	19.2-30VDC	Univ AC/DC Pwr
Dimensions (h x w x d)	2.4 x 0.7 x 2.7 in	3.67 x 0.24 x 4.04 in	3.67 x 0.24 x 4.04 in	3.67 x 0.24 x 4.04 in	3.67 x 0.24 x 4.04 in	3.67 x 0.24 x 4.04 in	2.7 x 0.7 x 4.5 in
Operating Temp Range	–25°C to +80°C	–20°C to +65°C	–20°C to +65°C	–20°C to +65°C	–20°C to +65°C	–20°C to +65°C	–25°C to +55°C

Accessory

Model	Description
DSCP70	Power supply connection module for DIN rail power bus

©1995-2017 Dataforth Corporation, All Rights Reserved ISO9001:2008-Registered QMS

DSCL20

Loop Powered Isolators - “Component Module”

Description

Each DSCL20 loop powered isolator provides a single channel of analog signal protection by electrically isolating its input from output for any DC process signal in the range of 0-20mA (or 4-20mA). The DSCL20 operates passively, obtaining its power from the transmitted signal (see Figure 1).

The input signal is chopped by a proprietary DC chopper circuit, isolation is provided by transformer coupling, a proprietary technique is used to suppress transmission of common mode spikes or surges, and the output signal from the secondary of the transformer is reconstructed to the original input signal.

Features

- No Power Supply Required, Signal Powered from 0-20mA (or 4-20mA) Input
- Simplified Wiring, Easy to Install Plug-In Accessories
- Small OEM Modular Package Ideal for PCB Mounting
- I/O Packaging for Vertical or Horizontal Mounting
- 500Vrms Transformer Isolation
- Prevents Ground-Loop Problems
- Prevents the Transfer of Interference Voltages and Currents
- High Accuracy Over Full Span
- CE Compliant

The compliance voltage or loop voltage must not exceed 17V, as this may damage the module.

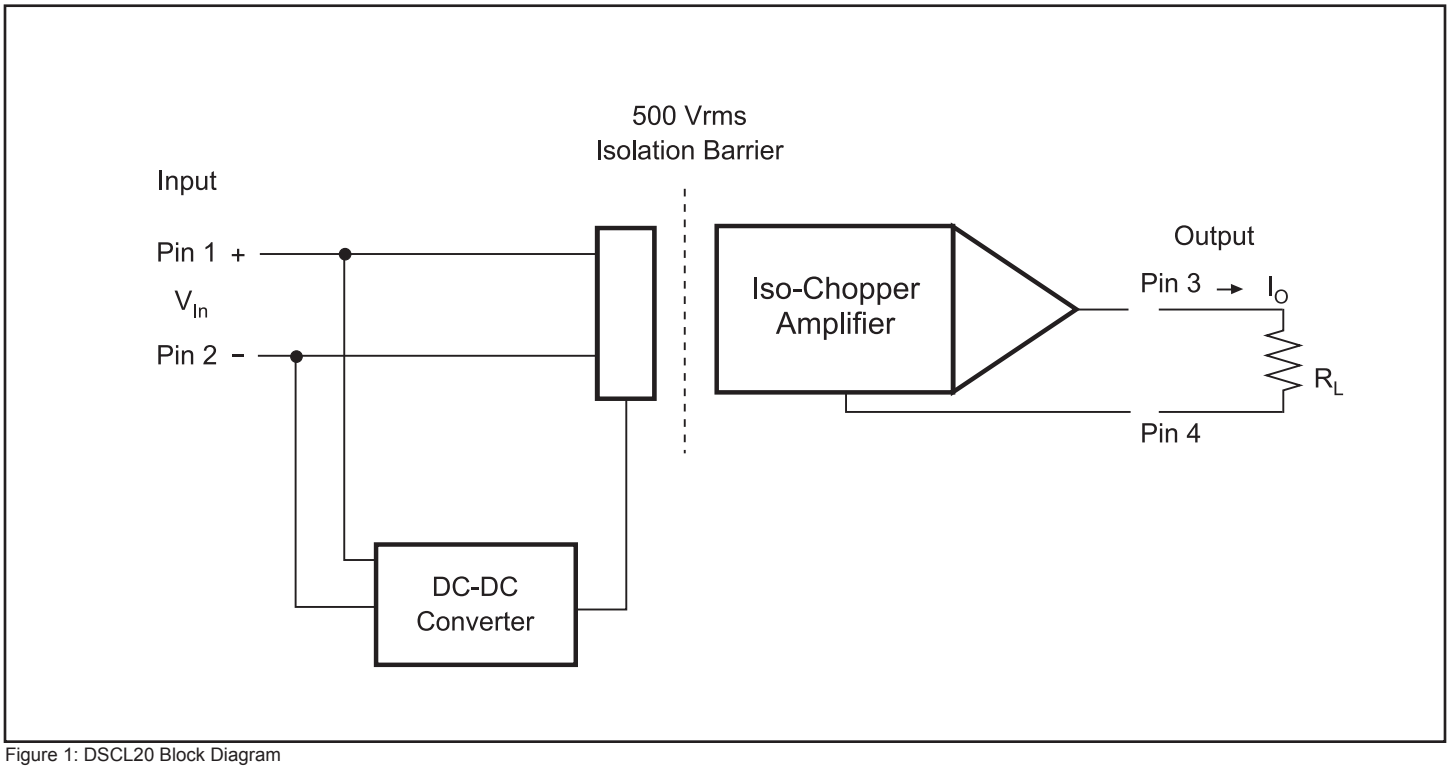

Figure 1: DSCL20 Block Diagram

©1995-2017 Dataforth Corporation, All Rights Reserved ISO9001:2008-Registered QMS

Specifications Typical* at T_A = +25°C

Module	DSCL20
Input Range	0/4-20mA
Input Current	50mA max at 18V max
CMV Input to Output	500Vrms, 1 Minute
Accuracy (at 100Ω Load)(1)	±0.05% Span Typical ±0.1% Span Max
Linearity	Included in Accuracy
Stability	<50ppm/°C
Overshoot	<20µA (Typical 5µA)
Compliance Voltage(2) (V_{in})	17V max
Voltage drop	<2V (for 500Ω Load)
Output Range	0/4-20mA
Limit Upper Range	30mA
Bandwidth, -3dB	750Hz
CMR (50Hz or 60Hz)	90dB
NMR	20dB per Decade above 750Hz
Response Time	1ms, to 90% Span
Load Resistance Range	0-600Ω
Output Noise	<20mV Peak-to-Peak (Typical <5mV)
Environmental	Weight Approximately 1.5g
Housing Material	Lexan 940 (UL 94 V-O)
Shock Test	50g (10 Shocks, 3 Axis)
Operating Temp. Range	–20°C to +65°C
Storage Temp. Range	–40°C to +85°C
Relative Humidity	0 to 75% Noncondensing
Emissions	EN50081-2 (Radiated, Conducted)
Immunity	EN50082-2 (ESD, RF, EFT)

NOTES:
*Contact factory or your local Dataforth sales office for maximum values.
(1) Additional error <0.2% at 500Ω load
(2) $V_{in}=I_OR_L$ + <2V

Ordering Information

Model	Input Range	Output Range	Package
DSCL20-01	0-20mA (4-20mA)	0-20mA (4-20mA)	Bent Pins
DSCL20-02	0-20mA (4-20mA)	0-20mA (4-20mA)	Straight Pins

Accessory

Model	Description
DSCX-01	Socket for DSCL20-02

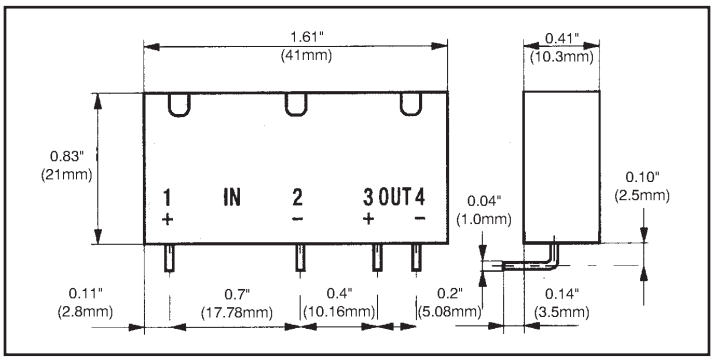

Figure 2: DSCL20-01 (Bent Pins)

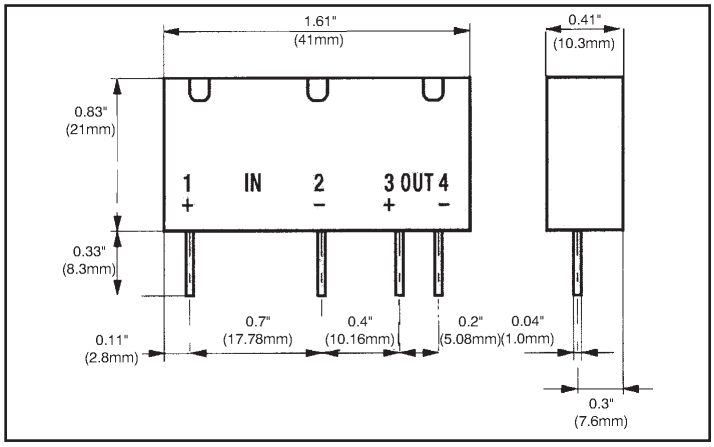

Figure 3: DSCL20-02 (Straight Pins)

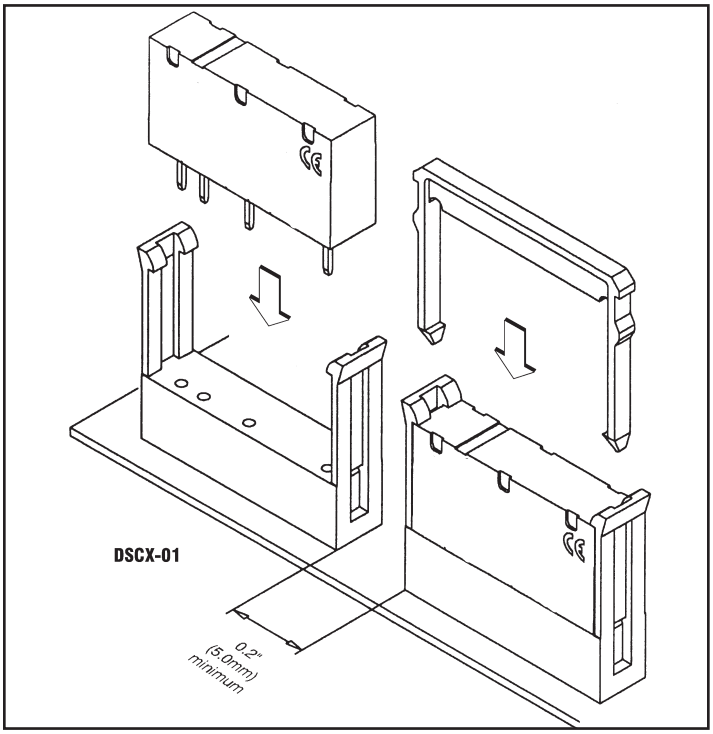

Figure 4: DSCX-01 Socket and Hold-down Accessory for DSCL20-02 (Straight Pin Modules)

DSCL

©1995-2017 Dataforth Corporation, All Rights Reserved ISO9001:2008-Registered QMS

DSCL21

Loop Powered Isolator - DIN Mount

Description

Each DSCL21 loop powered isolator provides a single channel of analog signal protection by electrically isolating its input from output for any DC process signal in the range of 0-20mA (or 4-20mA). The DSCL21 operates passively, obtaining its power from the transmitted signal (see Figure 1).

The input signal is chopped by a proprietary DC chopper circuit, isolation is provided by transformer coupling, a proprietary technique is used to suppress transmission of common mode spikes or surges, the output signal from the secondary of the transformer is reconstructed to the original input signal.

Features

- No Power Supply Required, Signal Powered from 0-20mA (or 4-20mA) Input
- Simplified Wiring for Fast Installation
- Narrow 12.5mm DIN Package for High-Density Mounting
- No Recalibration or Maintenance Required
- 500Vrms Transformer Isolation
- Prevents Ground-Loop Problems
- Prevents the Transfer of Interference Voltages and Currents
- High Accuracy Over Full Span
- CE Compliant

The compliance voltage or loop voltage must not exceed 17V, as this may damage the module.

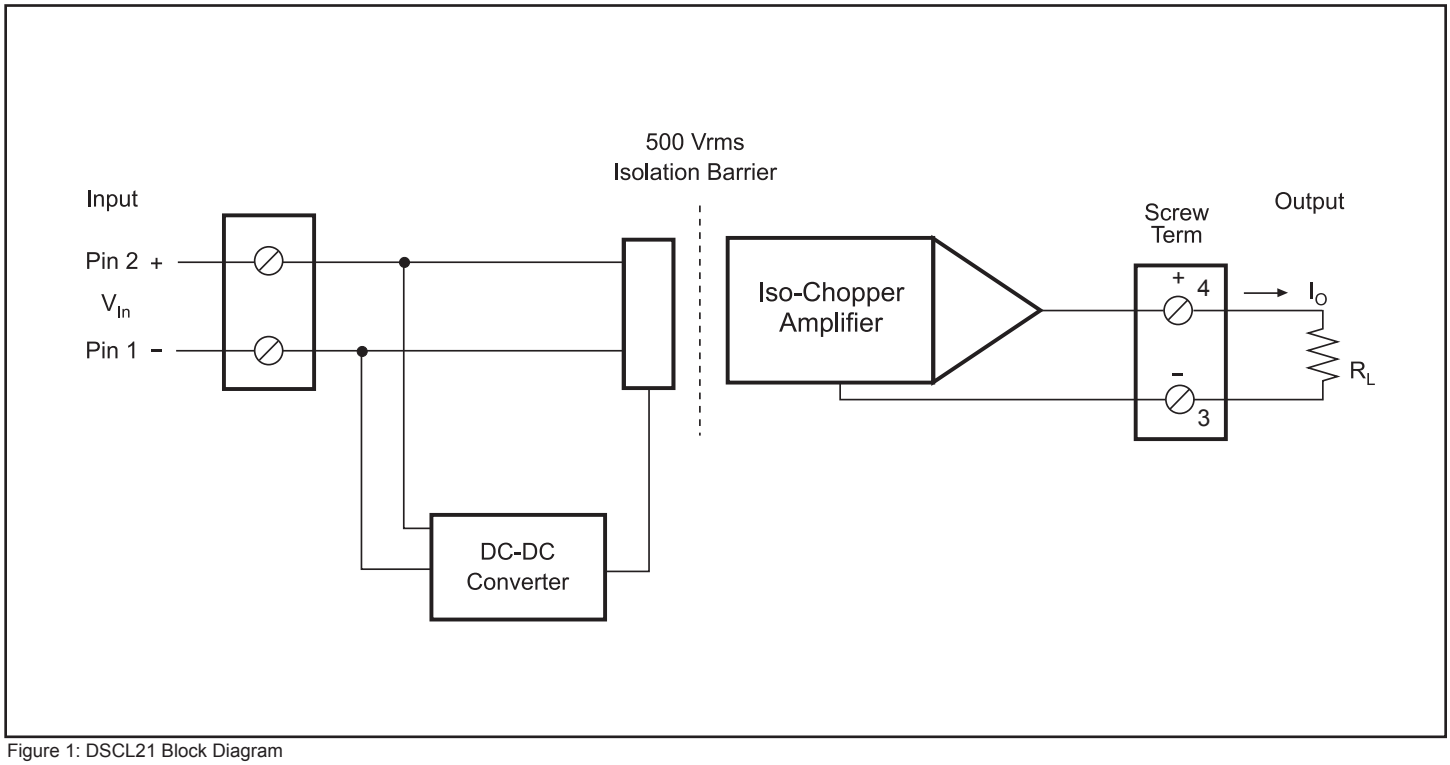

Figure 1: DSCL21 Block Diagram

©1995-2017 Dataforth Corporation, All Rights Reserved ISO9001:2008-Registered QMS

Specifications

Typical* at T_A = +25°C; Load R=100Ω (I_{out}), ≥5MΩ(V_{out})

Module	DSCL21-01
Input Range	0/4-20mA
Input Current	50mA max at 18V max
CMV Input to Output	500Vrms, 1 Minute
Accuracy (at 100Ω Load)(1)	±0.1% Span Typical ±0.2% Span Max
Linearity	Included in Accuracy
Stability	<50ppm/°C
Overshoot	<20µA (Typical 5µA)
Compliance Voltage(2) (V_{in})	17V max
Voltage drop	<2V (for 500Ω Load)
Output Range	0-20mA (4-20mA)
Limit Upper Range	30mA
Bandwidth, -3dB	750Hz
CMR (50Hz or 60Hz)	90dB
NMR	20dB per Decade above 750Hz
Response Time	1ms, to 90% Span
Load Resistance Range	0-600Ω
Output Noise	<20mV (Typical <5mV)
Environmental	Weight Approximately 35g
Housing Material	Lexan 940 (UL 94 V-O)
Shock Test	50g (10 Shocks, 3 Axis)
Operating Temp. Range	–20°C to +65°C
Storage Temp. Range	–40°C to +85°C
Relative Humidity	0 to 75% Noncondensing
Emissions	EN50081-2 (Radiated, Conducted)
Immunity	EN50082-2 (ESD, RF, EFT)

NOTES:
*Contact factory or your local Dataforth sales office for maximum values.
(1) Additional error <0.2% at 500Ω load (I_{OUT})
(2) $V_{in} = I_O R_L$ + <2V

Ordering Information

Model	Input Range	Output Range
DSCL21-01	0-20mA (4-20mA)	0-20mA (4-20mA)

Dimensional and Wiring Information

The DSCL21 DIN mount package accepts EN50022 (35 x 7.5) and EN50035 (G32) type rails; Dataforth SCMXRAIL1-xx or SCMXRAIL2-xx. Multiple DSCL21 modules may be mounted next to each other without affecting input or output signals.

Screw terminals with wire protection clamps sized for 0.2 to 4mm² solid or 0.2 to 2.5mm² stranded wires. The DSCL21 may be mounted in any position. The DSCL21 requires no maintenance.

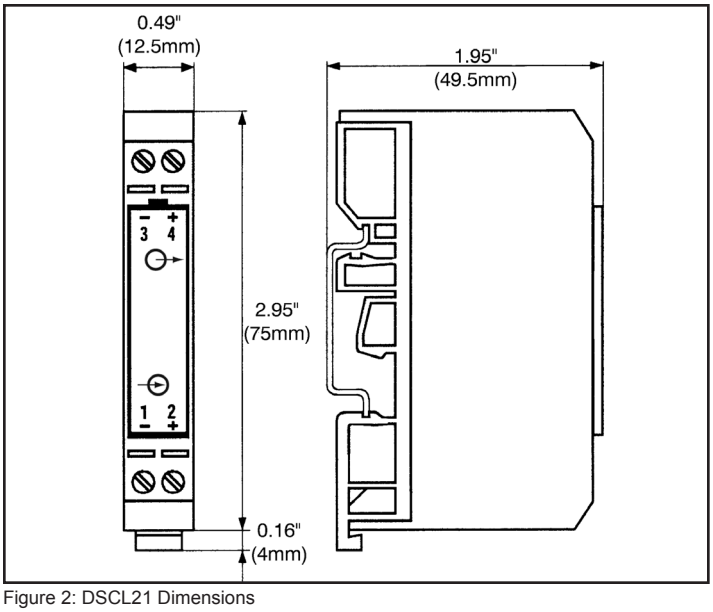

Figure 2: DSCL21 Dimensions

©1995-2017 Dataforth Corporation, All Rights Reserved ISO9001:2008-Registered QMS

DSCL22

Loop Powered Isolators - DIN or Panel Mount

Description

Each DSCL22 loop powered isolator provides 1, 2, or 3 channels of analog signal protection by electrically isolating its input from output for any DC process signal in the range of 0-20mA (or 4-20mA). The DSCL22 operates passively, obtaining its power from the transmitted signal (see Figure 1).

The input signal is chopped by a proprietary DC chopper circuit, isolation is provided by transformer coupling, a proprietary technique is used to suppress transmission of common mode spikes or surges, and the output signal from the secondary of the transformer is reconstructed to the original input signal.

If one input to two isolated outputs is desired, multiple channel units may be configured as a splitter (see Figure 2).

Features

- No Power Supply Required, Signal Powered from 0-20mA (or 4-20mA) Input
- Simplified Wiring for Fast Installation
- DIN Rail or Panel Mountable
- Narrow DIN Package, Mounts up to 27 Devices into a 19" Rack Space
- No Recalibration or Maintenance Required
- Up to 4000Vrms Transformer Isolation
- Prevents Ground-Loop Problems
- Prevents the Transfer of Interference Voltages and Currents
- High Accuracy Over Full Span
- CE Compliant

The compliance voltage or loop voltage must not exceed 17V, as this may damage the module.

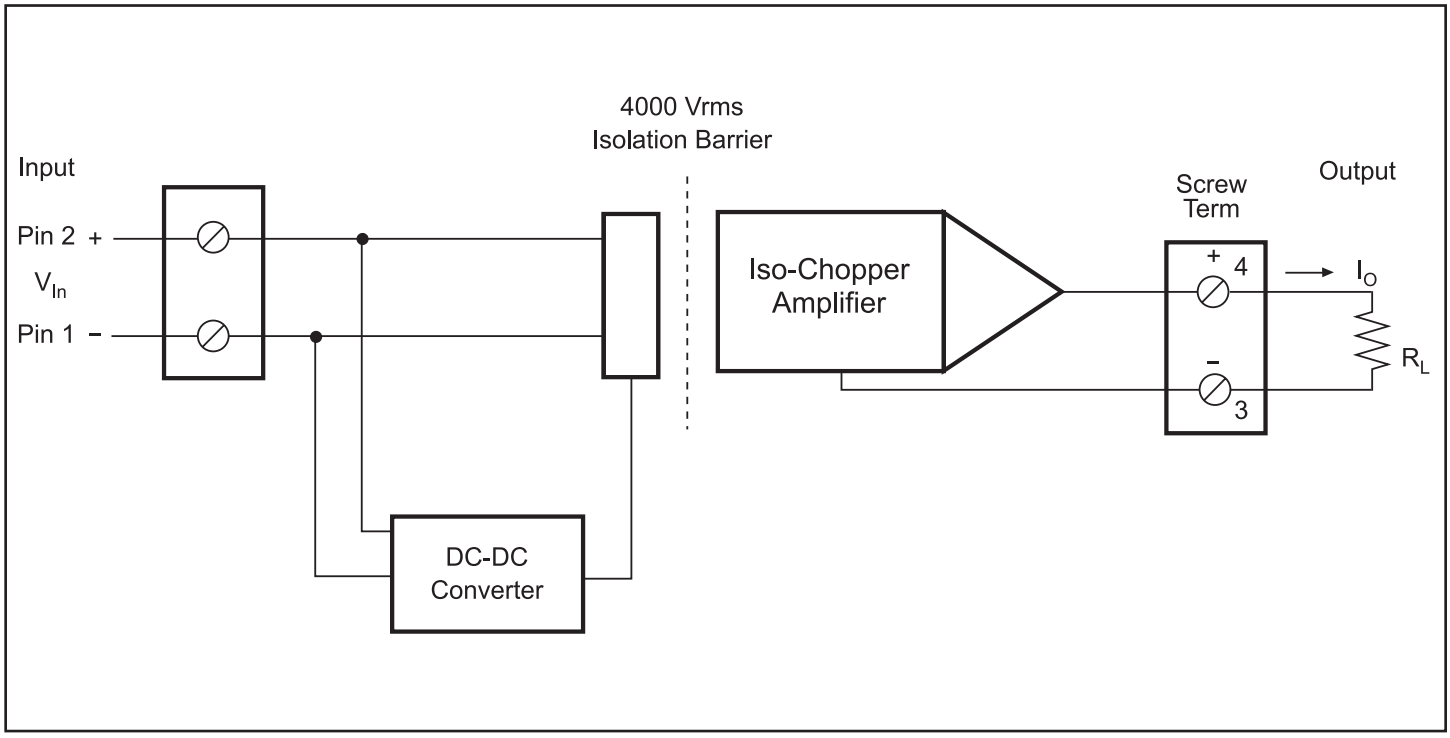

Figure 1: DSCL22 Block Diagram, Single Channel Model

©1995-2017 Dataforth Corporation, All Rights Reserved ISO9001:2008-Registered QMS

Specifications

Typical* at T_A = +25°C; Load R = 250Ω (current out)

Module	DSCL22-01,-11,-21
Input Range	0/4-20mA
Input Current	50mA max at 27V max
CMV Input to Output	4000Vrms (1ch) or 2300Vrms (2 & 3ch), 1 Minute
Accuracy (at 250Ω Load)(1)	±0.05% Span Typical ±0.1% Span Max
Linearity	Included in Accuracy
Stability	<50ppm/°C
Input Overshoot	<20µA (Typical 5µA)
Compliance Voltage(2) (V_{in})	25.65V max
Voltage Drop	<2.6V (for 500Ω Load)
Output Range	0/4-20mA
Limit Upper Range	40mA
Bandwidth, –3dB	500Hz
CMR (50Hz or 60Hz)	112dB
NMR	20dB per Decade above 500Hz
Response Time	1ms, to 90% Span
Load Resistance Range	0-1000Ω
Output Noise	<20mV (Typical <5mV)
Environmental	Weight Approximately 100g
Housing Material	Lexan 940 (UL 94 V-O)
Shock Test	50g (10 Shocks, 3 Axis)
Operating Temp. Range	–25°C to +55°C
Storage Temp. Range	–40°C to +70°C
Relative Humidity	0 to 75% Noncondensing
Emissions	EN50081-2 (Radiated, Conducted)
Immunity	EN50082-2 (ESD, RF, EFT)

NOTES:
*Contact factory or your local Dataforth sales office for maximum values.
(1) Additional error <0.05% per 100Ω above 250Ω
(2) $V_{in}=I_O R_L$ + <2.6V

Ordering Information

Model	Channels	Input Range	Output Range	Figure
DSCL22-01	1	0-20mA (4-20mA)	0-20mA (4-20mA)	3
DSCL22-11	2	0-20mA (4-20mA)	0-20mA (4-20mA)	4
DSCL22-21	3	0-20mA (4-20mA)	0-20mA (4-20mA)	4

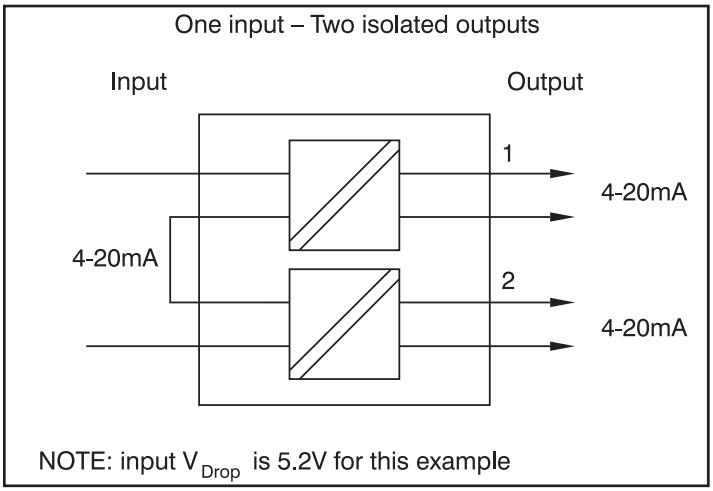

Figure 2: Multi-Channel Versions may be used as a Splitter

Dimensional and Wiring Information

The DSCL22 DIN mount package accepts EN50022 (35 x 7.5) type rails; Dataforth PN SCMXRAIL1-xx. Multiple DSCL22 modules may be mounted next to each other without affecting input or output signals. The DSCL22 may be mounted in any position.

Screw terminals with wire protection clamps sized for 2 x 0.75mm^2 or 1 x 2.5mm^2 wires. The DSCL22 requires no maintenance.

©1995-2017 Dataforth Corporation, All Rights Reserved ISO9001:2008-Registered QMS

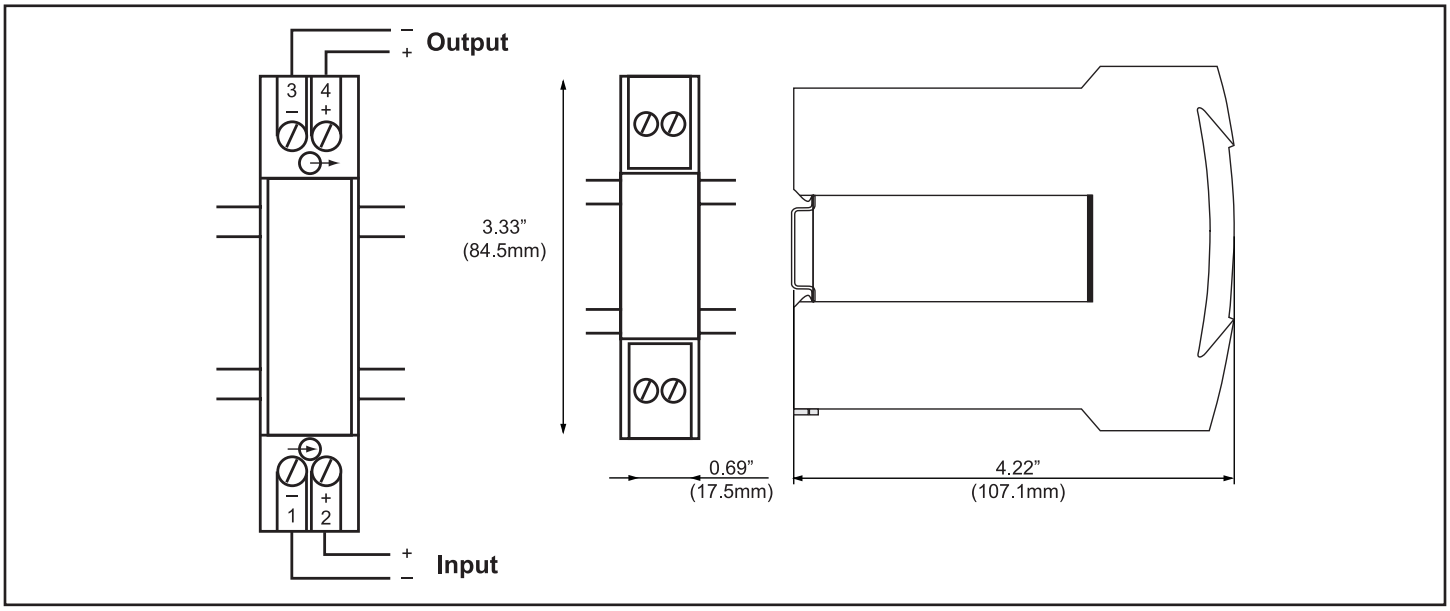

Figure 3: DSCL22-01 Wiring and Dimensions

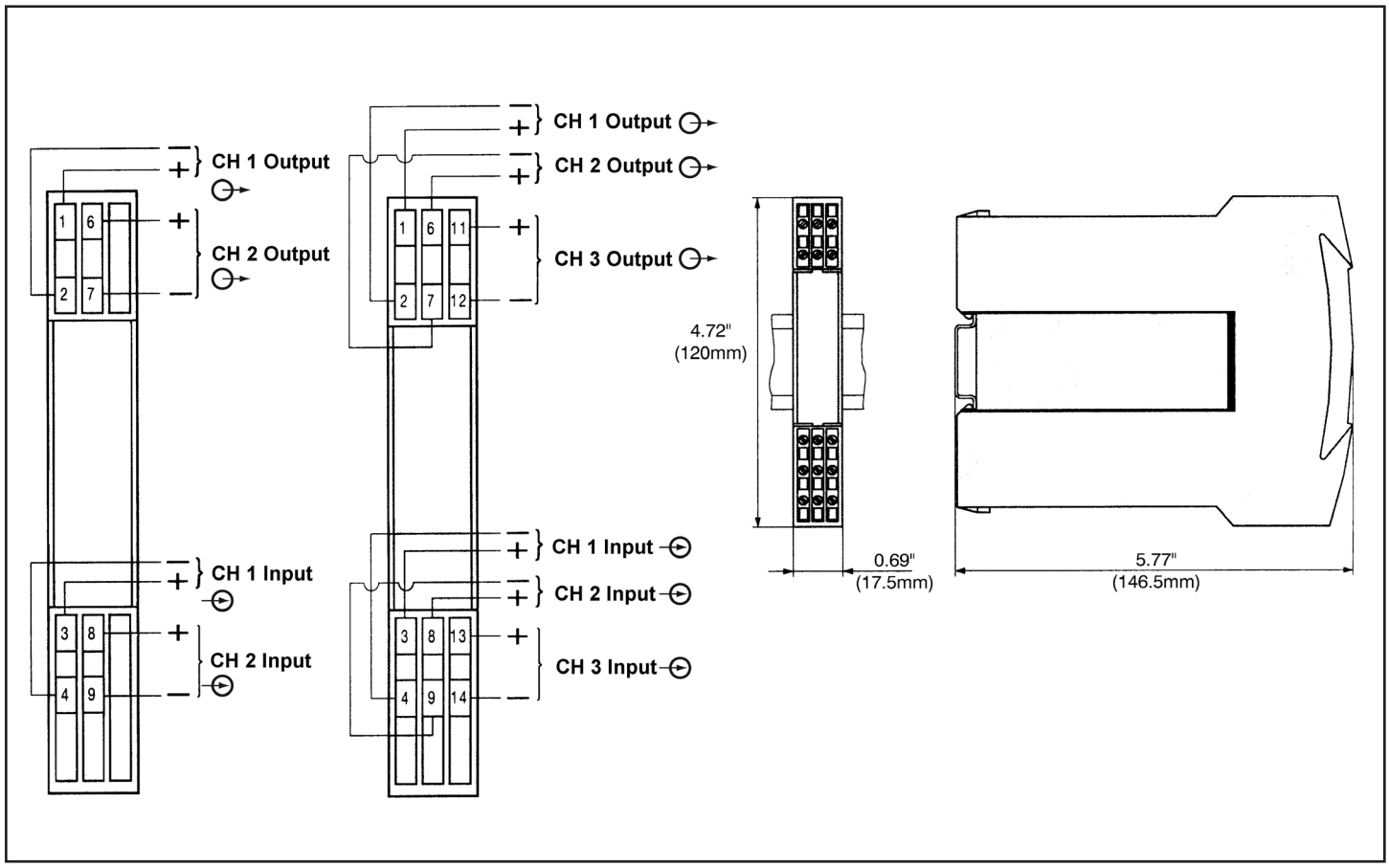

Figure 4: DSCL22-11,-21 Wiring and Dimensions

©1995-2017 Dataforth Corporation, All Rights Reserved ISO9001:2008-Registered QMS

DSCL23

4 to 20mA Isolators with DC Supply - DIN or Panel Mount

Description

Each DSCL23 loop powered isolator provides 1 or 2 channels of analog signal protection by electrically isolating its input from output for any DC process signal in the range 4-20mA. The DSCL23 feeds isolated DC power to the field transmitter and returns a fully isolated 4-20mA analog signal (see Figure 1).

The input signal is chopped by a proprietary DC chopper circuit, isolation is provided by transformer coupling, a proprietary technique is used to suppress transmission of common mode spikes or surges, and the output signal from the secondary of the transformer is reconstructed to the original input signal.

Features

- Feeds DC Power to 4 to 20mA Transmitter, Isolates Loop
- Simplified Wiring for Quick Install and Signal Protection
- DIN Rail or Panel Mountable
- Narrow DIN Package, Mounts up to 27 Devices into a 19" Rack Space
- No Recalibration or Maintenance Required
- 2300Vrms Transformer Isolation
- Prevents Ground-Loop Problems
- Prevents the Transfer of Interference Voltages and Currents
- High Accuracy Over Full Span
- CE Compliant

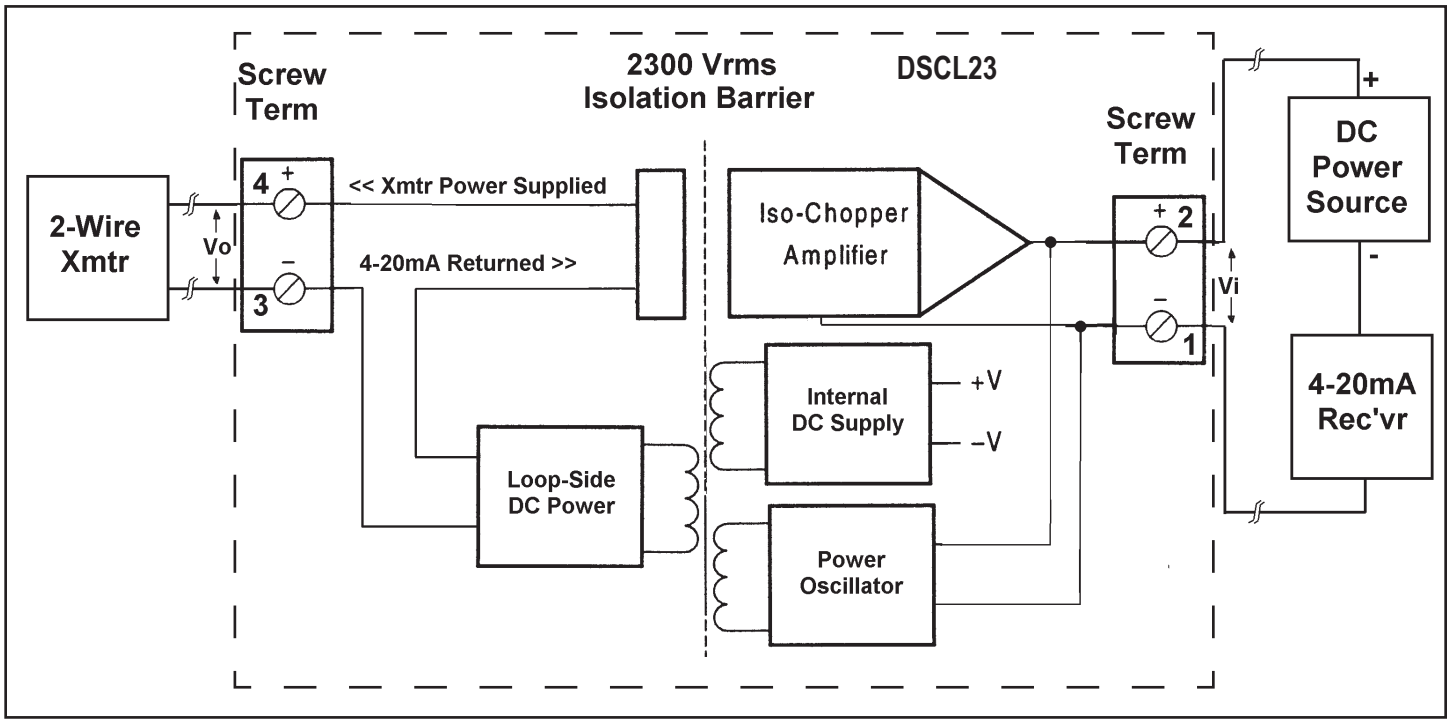

Figure 1: DSCL23-01 Block Diagram, Single Channel Model

©1995-2017 Dataforth Corporation, All Rights Reserved ISO9001:2008-Registered QMS

Specifications

Typical* at T_A = +25°C and +24VDC power

Module	DSCL23-01	DSCL23-02
Input Range(1) from Xmtr	4-20mA	*
CMV Input to Output	2300Vrms, 1 Minute	*
Accuracy	±0.1% Span Typical	*
	±0.2% Span Max	*
Linearity	Included in Accuracy	*
Stability	<50ppm/°C	*
Overshoot	<20µA (Typical 5µA)	*
Output Range(2) to System	4-20mA (50mA max)	*
Bandwidth, –3dB	200Hz	*
CMR (50Hz or 60Hz)	80dB	*
NMR	20dB per Decade above 200Hz	*
Response Time	2ms, to 90% Span	*
Output Noise	<20mV p-p (Typical <5mV p-p) (120 kHz)	*
DC Power Source, Vi(2)	12-30VDC (24V nom)	*
Xmtr. Power Supplied, Vo(1)	>19.3VDC at 20mA and 24V Power Vi	*
Environmental	Weight Approx. 100g	Weight Approx. 200g
Housing Material	Lexan 940 (UL 94 V-O)	*
Operating Temp. Range	–25°C to +55°C	*
Storage Temp. Range	–40°C to +70°C	*
Shock Test	50g (10 Shocks, 3 Axis)	*
Relative Humidity	0 to 75% Noncondensing	*
Emissions	EN50081-2 (Radiated, Conducted)	*
Immunity	EN50082-2 (ESD, RF, EFT)	*

NOTES:
*Contact factory or your local Dataforth sales office for maximum values.
* Same specification as DSCL23-01
(1) At connection between isolator and 2-Wire Transmitter.
(2) At connection between isolator and Power Supply

Ordering Information

Model	Channels	Input Range	Output Range	Figure
DSCL23-01	1	4-20mA	4-20mA	2
DSCL23-02	2	4-20mA	4-20mA	3

Dimensional and Wiring Information

The DSCL23 DIN mount package accepts EN50022 (35 x 7.5) type rails; Dataforth PN SCMXRAIL1-xx. Both DSCL models may be adapted for screw mounting to wall or panel.

Multiple DSCL23 modules may be mounted next to each other without affecting input or output signals. The compact and narrow 17.5mm housing allows for up to 27 devices in a 19" rack space. The DSCL23 may be mounted in any position.

Screw terminals with wire protection clamps sized for 2 x 0.75mm^2 or 1 x 2.5mm^2 wires. The DSCL23 requires no maintenance.

©1995-2017 Dataforth Corporation, All Rights Reserved ISO9001:2008-Registered QMS

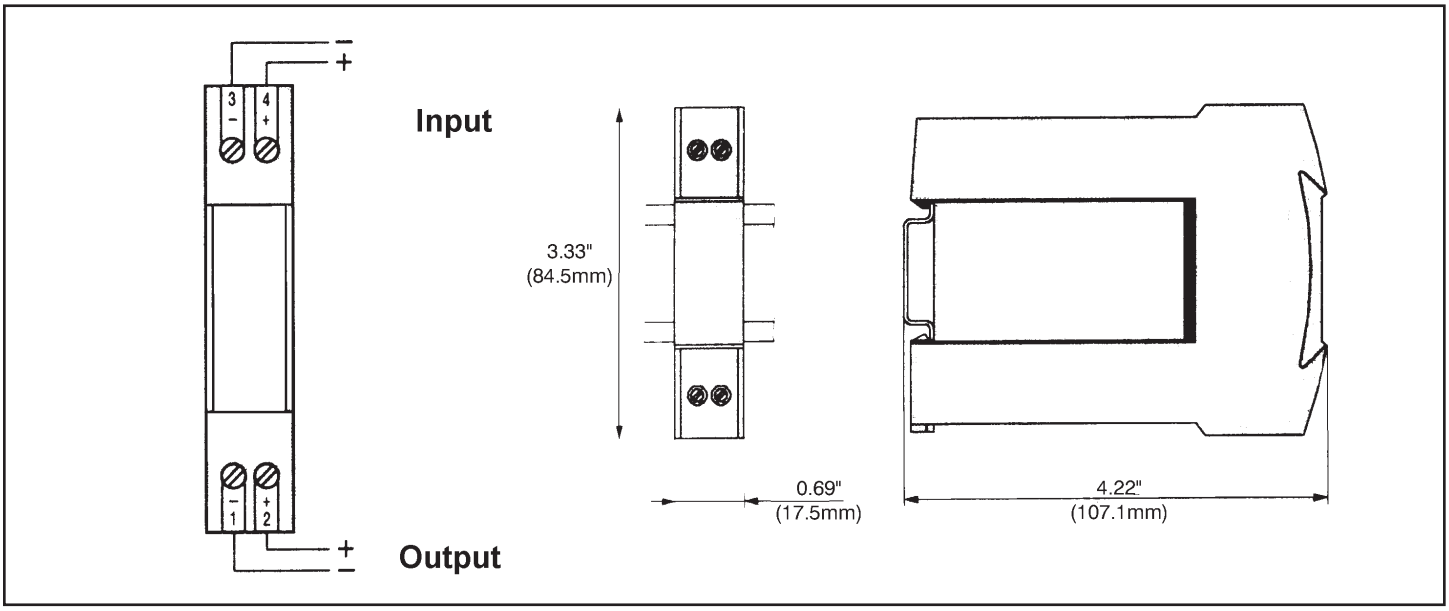

Figure 2: DSCL23-01 Wiring and Dimensions

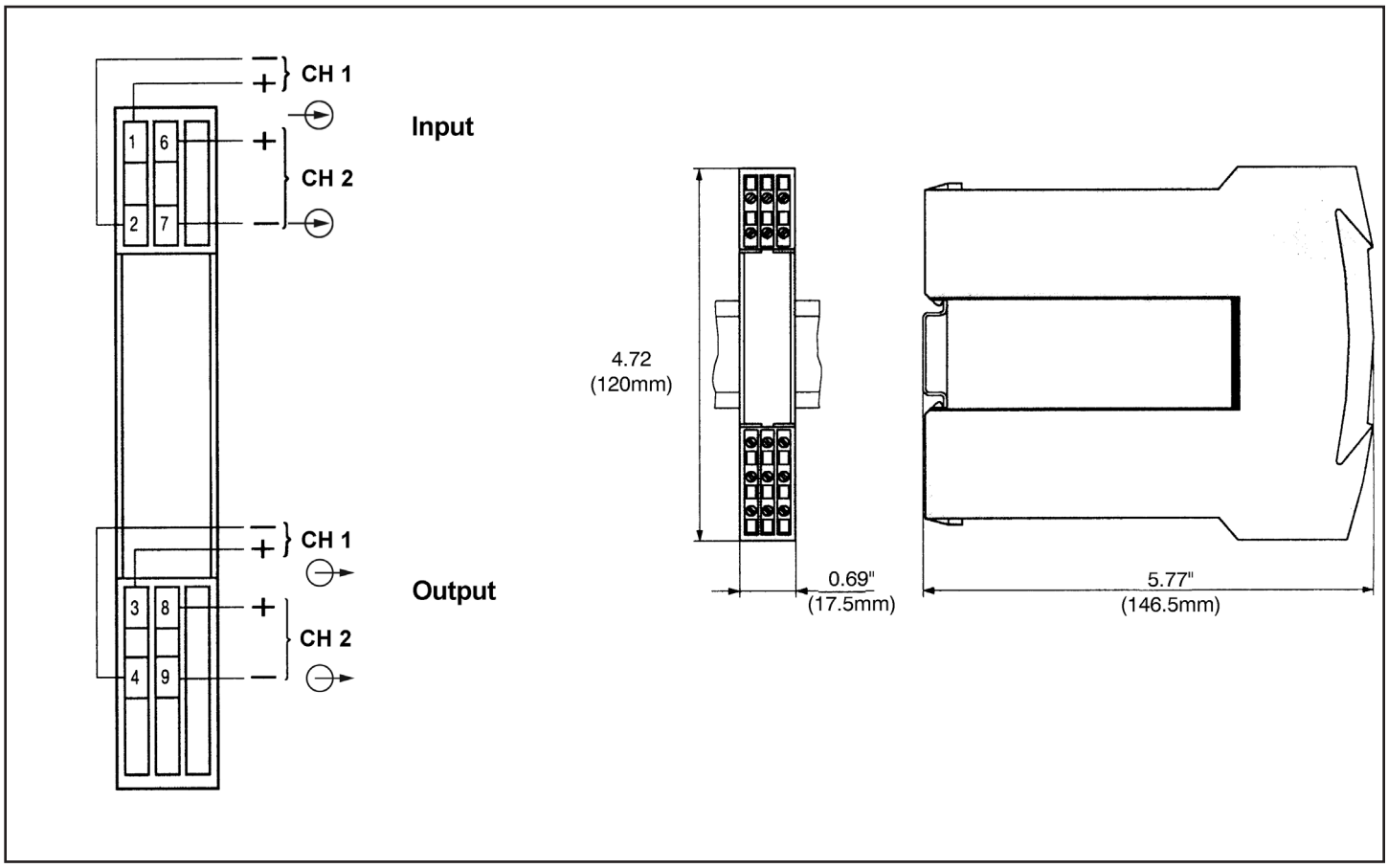

Figure 3: DSCL23-02 Wiring and Dimensions

©1995-2017 Dataforth Corporation, All Rights Reserved ISO9001:2008-Registered QMS

DSCL24 (Single Channel)

Jumper Configurable Isolators - DIN or Panel Mount

Description

Each single channel DSCL24 module provides up to 36 different configurations of process current or voltage inputs and outputs. A unique snap-in tool allows quick extraction of the module's circuit board to permit the user to reposition four (4) jumpers and reconfigure each module's I/O. The factory default setting provides 4-20mA input and output current.

Each module provides full 3-way isolation with 2300Vrms CMV input to output and 3700Vrms CMV power supply to I/O protection (Figure 1). Two module versions are offered that accept universal power supply of either 24 to 60VDC or AC and 85 to 230VDC or AC with the alternating current usage accepting 45 to 400Hz power.

Features

- Uses Universal Power Supply of 24 to 60V or 85 to 230V AC/DC
- Configuration Jumpers Allow up to 36 I/O Settings
- Three-Way Isolation for 2300Vrms Protection
- Prevents Ground-Loop Problems
- Prevents the Transfer of Interference Voltages and Currents
- High Accuracy Over Full Span
- No Recalibration or Maintenance Required
- Narrow DIN Package, Mounts up to 27 Devices into a 19" Rack Space
- DIN Rail or Panel Mountable
- CE Compliant

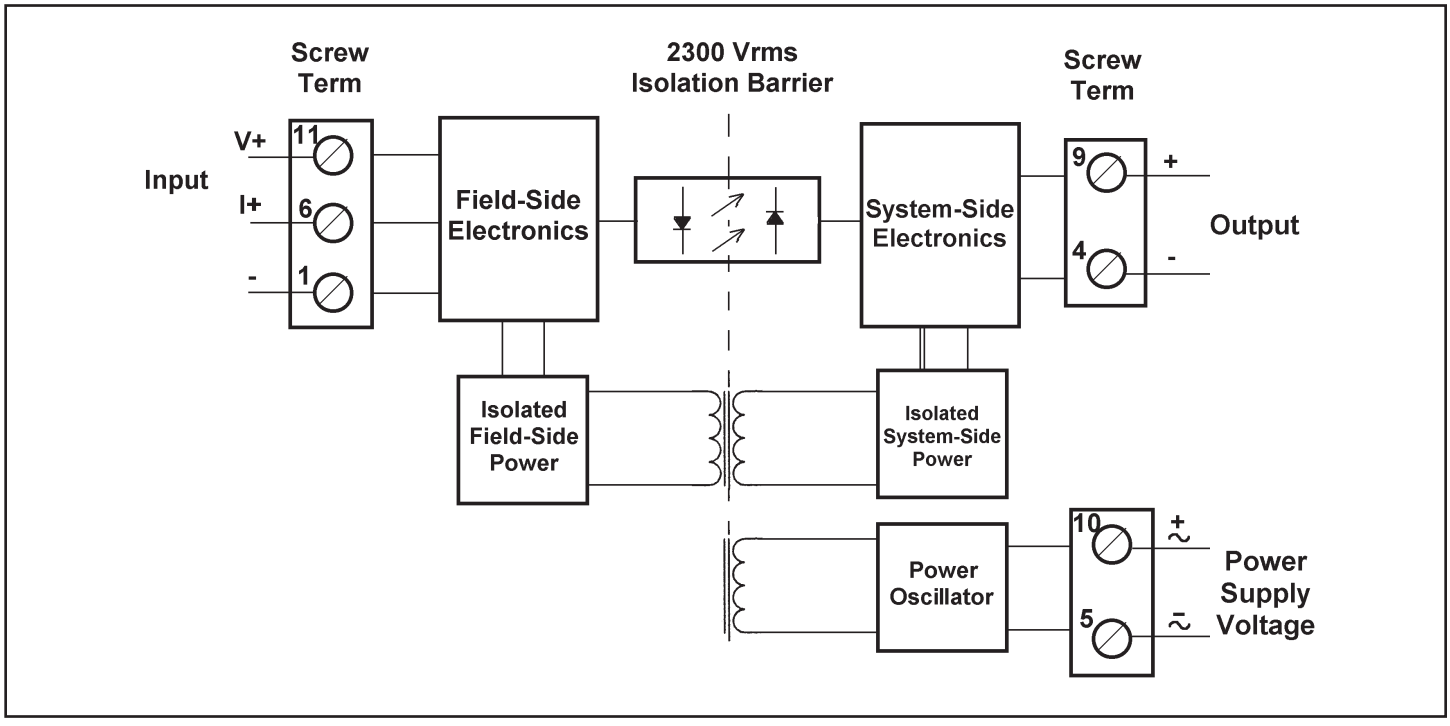

Figure 1: DSCL24 Block Diagram

©1995-2017 Dataforth Corporation, All Rights Reserved ISO9001:2008-Registered QMS

Specifications

Typical* at T_A = +25°C and 24VDC or 230VAC ±10% supply voltage

Module	DSCL24-01,-02
Input Range(1)	0/4-20mA, ±20mA, 2-10V, 0-10V, ±10V
Input Limit (I_{IN})	50mA, ±50mA
Input Limit (V_{IN})	40V, ±40V
CMV Input to Output	2300Vrms, 1 min.
CMV Power Supply to I/O	3700Vrms, 1 min.
Accuracy (at 250Ω Load)	±0.1% Span Typical ±0.2% Span Max
Input Resistance	15Ω Current Mode, 100kΩ Voltage Mode
Linearity	Included in Accuracy
Stability	<100ppm/°C
Input Overshoot	<20µA (Typical 5µA)
Output Range(1)	0/4-20mA, ±20mA, 2-10V, 0-10V, ±10V
Output Limit (I_{OUT})	20mA, ±20mA
Output Limit (V_{OUT})	10V, ±10V
Limit Upper Range	40mA
Bandwidth, –3dB	15Hz
CMR (50Hz or 60Hz)	110dB
NMR	16dB at 50/60Hz
Response Time	30ms, to 90% Span
Load Resistance Range	≤600Ω Current Mode, ≥2kΩ Voltage Mode
Output Noise	<0.5% p-p
Power Supply	
Voltage	(24 to 60) or (85 to 230)VDC/AC at 45-400Hz
Tolerance	DC –15% to +33%, AC ±15%
Power consumption	DC ≤1.2W, AC ≤3VA
Environmental	Weight Approximately 180g
Housing Material	Lexan 940 (UL 94 V-O)
Shock Test	50g (3 Shocks, 6 Axis)
Operating Temp. Range	–25°C to +55°C
Storage Temp. Range	–40°C to +70°C
Relative Humidity	0 to 75% Noncondensing
Emissions	EN50081-2 (Radiated, Conducted)
Immunity	EN50082-2 (ESD, RF, EFT)

NOTES:
*Contact factory or your local Dataforth sales office for maximum values.
(1) Thirty-six unique I/O ranges are jumper configurable. See Tables 1 & 2 for configuration options.

Configuration Guide

The default setting of factory stock modules is 4 to 20mA for both module input and output, that is, jumpers are inserted in positions B1 and B4 designating 4-20mA input and jumpers ST4 and ST3 are in position for current output.

However, the output can be user reconfigured for an alternative voltage or current signal by inserting the plug-in jumpers ST4 and ST3 in the appropriate positions shown in Table 1.

Ordering Information

Model	Input (default(1))	Output (default(1))	Power Supply
DSCL24-01	4-20mA	4-20mA	24-60VDC/AC
DSCL24-02	4-20mA	4-20mA	85-230VDC/AC

Table 1: Select Output Voltage or Current

Output →	Jumpers ST 4	ST 3
Voltage [V]	 U I	 U I
Current [mA]	 U I	 U I

Table 2: Select Voltage or Current Ranges

→ / ⊖→	4...20 mA	0...20 mA	–20…20 mA	2…10 V	0…10 V	–10…10 V
4...20 mA	**B1, B4**	B2, B4	B3, B4	B1, B4	B2, B4	B3, B4
0...20 mA	B1, B5	B2, B5	B3, B5	B1, B5	B2, B5	B3, B5
–20…20 mA	B1, B6	B2, B6	B3, B6	B1, B6	B2, B6	B3, B6
2…10 V	B1, B4	B2, B4	B3, B4	B1, B4	B2, B4	B3, B4
0…10 V	B1, B5	B2, B5	B3, B5	B1, B5	B2, B5	B3, B5
–10…10 V	B1, B6	B2, B6	B3, B6	B1, B6	B2, B6	B3, B6

NOTE: B1 through B6 Jumpers marked on PC board

©1995-2017 Dataforth Corporation, All Rights Reserved ISO9001:2008-Registered QMS

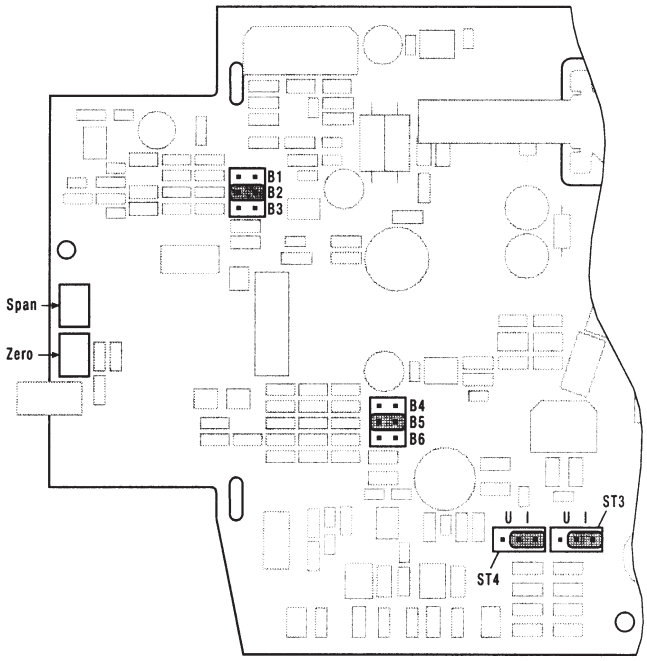

Jumpers B1 to B6 (Table 2) are used for selecting the standard configurable ranges. Providing that the 'Span' and 'Zero' potentiometers are not adjusted, changing the range has no effect on the modules' accuracy. The 'Span' and 'Zero' allow ±10% adjustments.

Dimensions

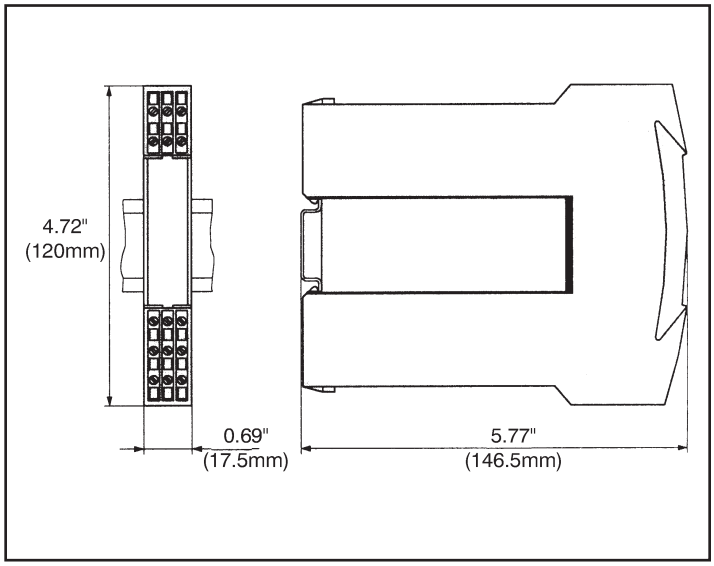

Connection Guide

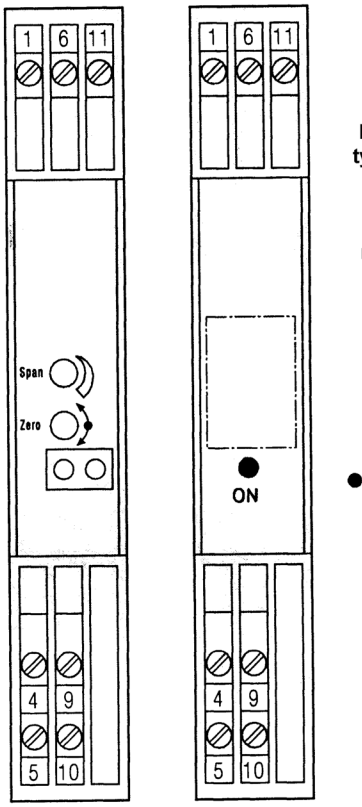

Without transparent cover

With transparent cover

The DSCL24 DIN mount accepts EN50022 (35 x 7.5) type rails; Dataforth SCMXRAIL1-xx. Multiple modules may be mounted next to each other without affecting I/O signals and they may be set in any position.

● **ON** Green LED

Clamp type screw terminals are sized for 2 x 0.75mm² or 1 x 2.5mm² wires. The DSCL24 requires no maintenance.

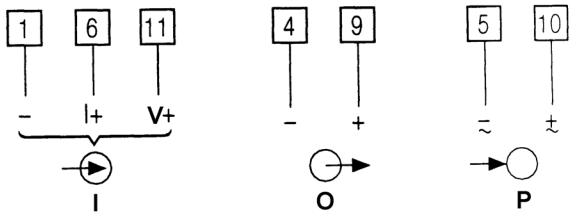

I = Input
O = Output
P = Power supply

©1995-2017 Dataforth Corporation, All Rights Reserved ISO9001:2008-Registered QMS

DSCL24 (Multi-Channel)

DIN Rail MOUNT CE

Loop Isolators - DIN or Panel Mount

Description

Each multi-channel DSCL24 module provides 4-20mA process current inputs and outputs.

Each module provides full 3-way isolation with 2300Vrms CMV input to output and 3700Vrms CMV power supply to I/O protection (Figure 1). Two module versions are offered that accept universal power supply of either 24 to 60VDC or AC and 85 to 230VDC or AC with the alternating current usage accepting 45 to 400Hz power.

Features

- Uses Universal Power Supply of 24 to 60V or 85 to 230V AC/DC
- Three-Way Isolation for 2300Vrms Protection
- Prevents Ground-Loop Problems
- Prevents the Transfer of Interference Voltages and Currents
- High Accuracy Over Full Span
- No Recalibration or Maintenance Required
- Narrow DIN Package, Mounts up to 27 Devices into a 19" Rack Space
- DIN Rail or Panel Mountable
- CE Compliant

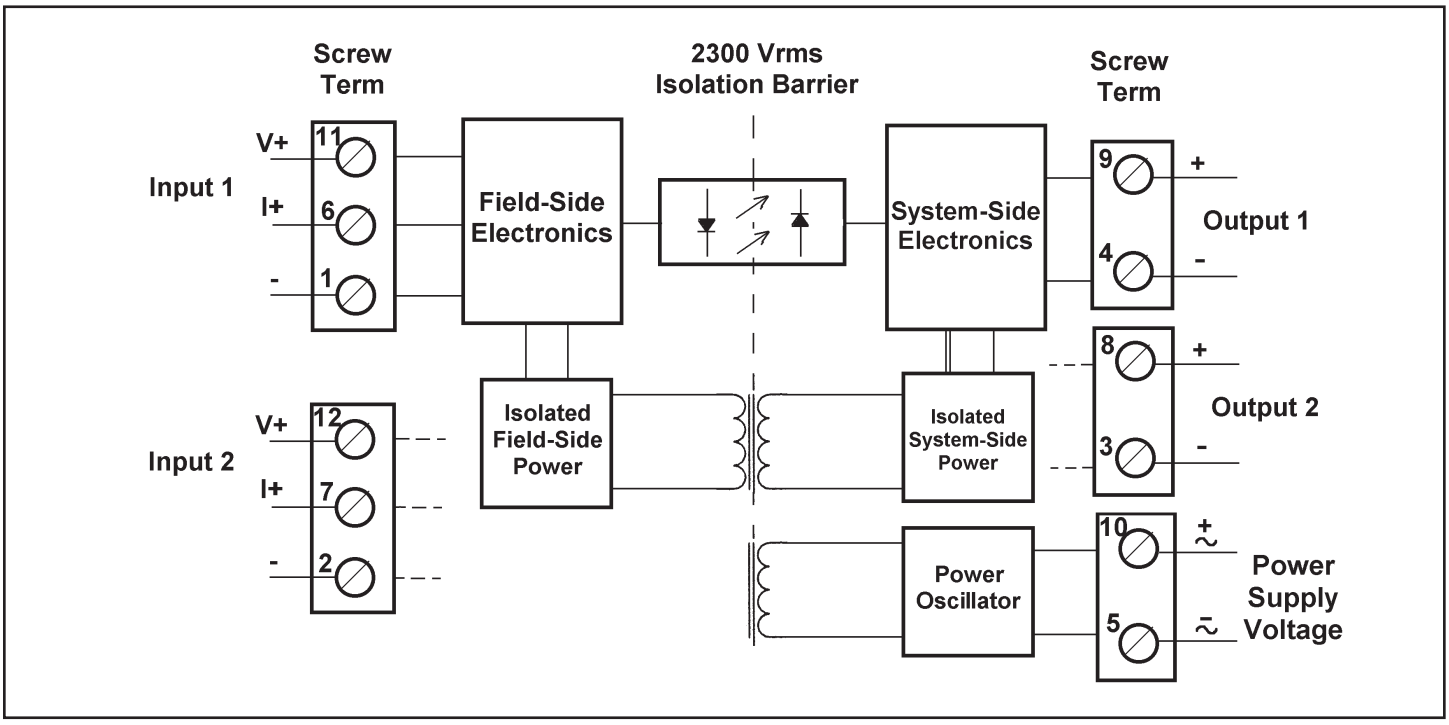

Figure 1: DSCL24 Block Diagram

DSCL

©1995-2017 Dataforth Corporation, All Rights Reserved ISO9001:2008-Registered QMS

Specifications Typical* at T_A = +25°C and 24VDC or 230VAC ±10% supply voltage

Module	DSCL24-11,-12
Input Range	4-20mA
Input Limit	40mA, ±40mA
CMV Input to Output	2300Vrms, 1 min.
CMV Power Supply to I/O	3700Vrms, 1 min.
Accuracy (at 250Ω Load)	±0.1% Span Typical, ±0.2% Span Max
Input Resistance	15Ω Current Mode
Linearity	Included in Accuracy
Stability	<100ppm/°C
Input Overshoot	<20µA (Typical 5µA)
Output Range	4-20mA
Limit Upper Range	40mA
Bandwidth, –3dB	15Hz
CMR (50Hz or 60Hz)	110dB
NMR	16dB at 50/60Hz
Response Time	30ms, to 90% Span
Load Resistance Range	≤600Ω Current Mode
Output Noise	<0.5% p-p
Power Supply	
Voltage	(24 to 60) or (85 to 230)VDC/AC at 45-400Hz
Tolerance	DC –15% to +33%, AC ±15%
Power Consumption	DC ≤1.6W, AC ≤3.4VA
Environmental	Weight Approximately 180g
Housing Material	Lexan 940 (UL 94 V-O)
Shock Test	50g (3 Shocks, 6 Axis)
Operating Temp. Range	–25°C to +55°C
Storage Temp. Range	–40°C to +70°C
Relative Humidity	0 to 75% Noncondensing
Emissions	EN50081-2 (Radiated, Conducted)
Immunity	EN50082-2 (ESD, RF, EFT)

NOTES:
*Contact factory or your local Dataforth sales office for maximum values.

©1995-2017 Dataforth Corporation, All Rights Reserved ISO9001:2008-Registered QMS

Connection Guide

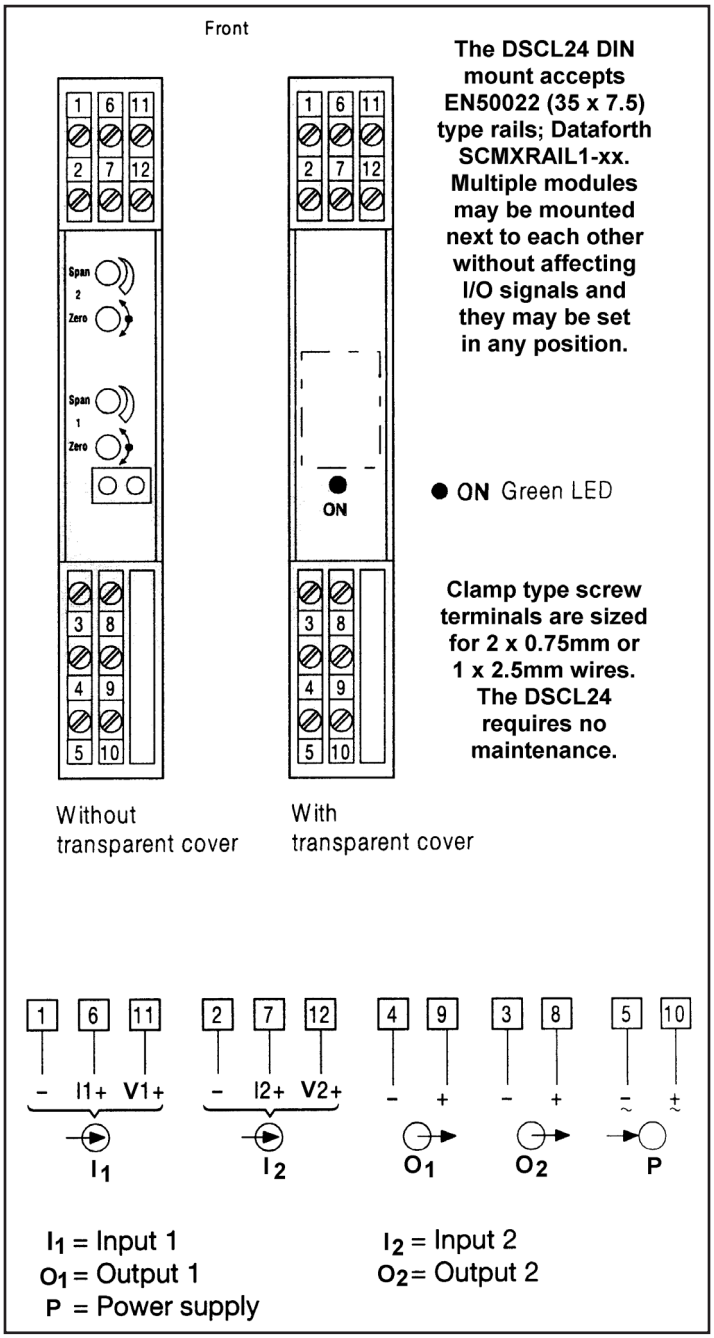

Ordering Information

Model	Input (default*)	Output (default*)	Power Supply
DSCL24-11	(2) 4-20mA, 4-20mA	(2) 4-20mA, 4-20mA	24-60VDC/AC
DSCL24-12	(2) 4-20mA, 4-20mA	(2) 4-20mA, 4-20mA	85-230VDC/AC

Dimensions and Mounting

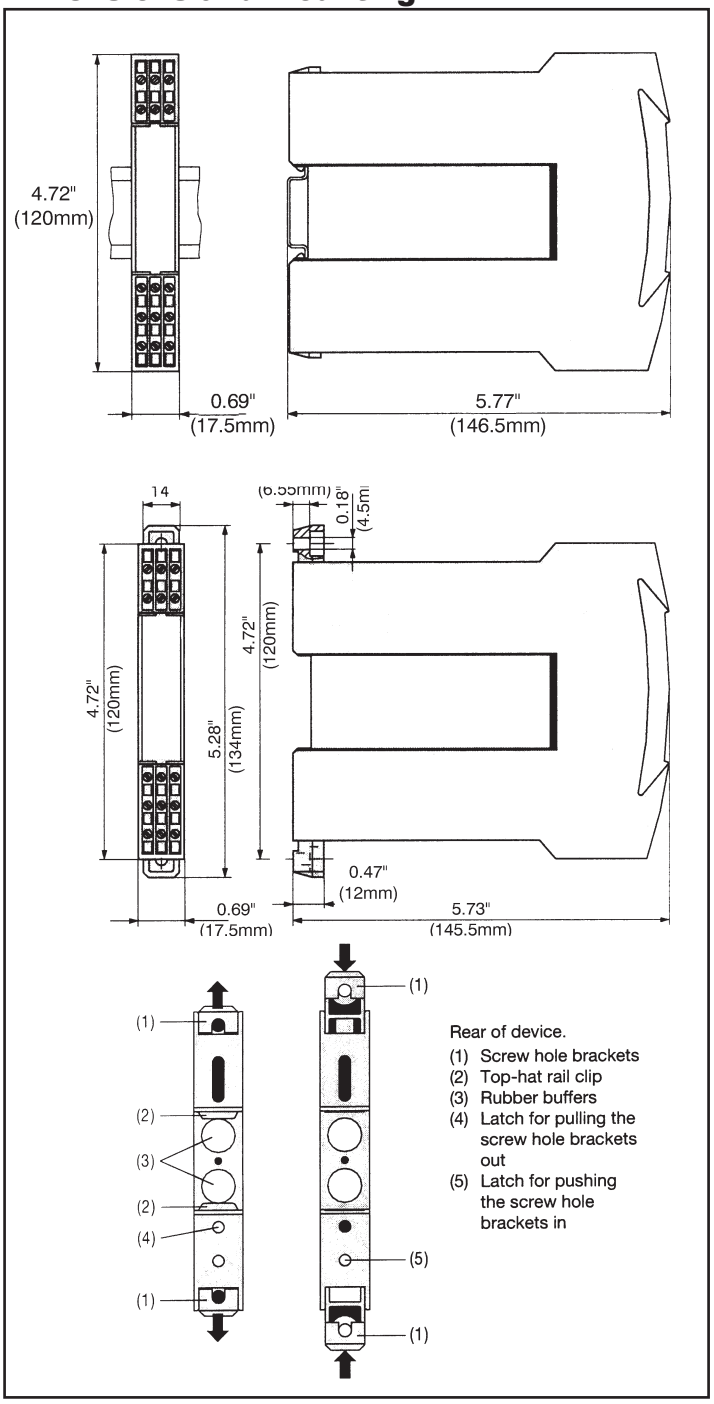

Dimensions: Inches (millimeters)

DSCL

©1995-2017 Dataforth Corporation, All Rights Reserved ISO9001:2008-Registered QMS

DSCP20

Programmable 2-Wire Temperature Transmitters, DIN Mount

Description

Each DSCP20 2-wire transmitter is designed for measuring temperature using thermocouples or RTDs (Figure 1). The input type, measurement range, and other features are software configurable. A PC, the DSCX-887 and DSCX-416 interface cables, and the DSCX-895 configuration software are required to configure the transmitter. Communication is serial RS-232C.

The DSCP20 can interface to 12 industry standard thermocouple types: J, K, T, E, R, S, B, N, L, U, C, and D. Cold junction compensation is selectable as either internal or external. Three RTD types, Pt 100, Ni 100, and Cu 50* can be interfaced in a 2-, 3- or 4-wire connection. All inputs are linearized using up to 23 points of interpolation, and total errors are less than ±0.2%.

Other configurable features include: zero point and input range adjustment, output response for open or short-circuit sensor or cable failure, normal or inverted output, ripple suppression for 50Hz or 60Hz, and output time response. The DSCX-895 configuration software allows query, print-out and saving of configuration settings, display of input measurement value, and display of interpolation table points.

*Call factory for Cu RTD information.

Features

- Low-Cost Non-Isolated 4-20mA Transmitter
- No Power Supply Required, Powered from Output Loop Current
- Interfaces to All Standard Thermocouples and RTDs
- Software Configurable Input Type and Range
- Open and Short-Circuit Input Detection
- Configurable with or without Output Loop Power Connected
- Mounts on Standard DIN Rail
- –25°C to +80°C Operating Temperature
- CE Compliant

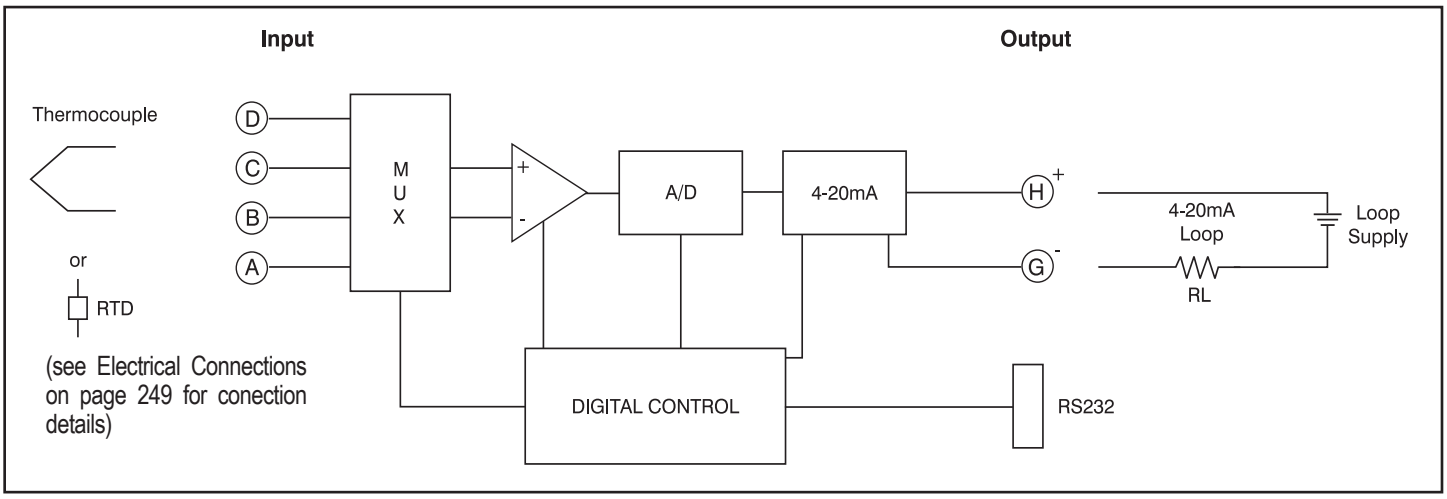

Figure 1: DSCP20 Block Diagram

The following grounding condition must be observed when programming the instrument.

If one of the power supply or input wires is grounded to earth, a PC without an earth connection must be used when programming (e.g. a laptop running on batteries).

Under no circumstances should a PC be used running from a power supply with an earth connection, as this will damage the module.

Thermocouple Type and Material

Type	Material
B	Pt30Rh-Pt6Rh
E	NiCr-CuNi
J	Fe-CuNi
K	NiCr-Ni
L	Fe-CuNi
N	NiCrSi-NiSi
R	Pt13Rh-Pt
S	Pt10Rh-Pt
T	Cu-CuNi
U	Cu-CuNi
C	W5 Re/W26 Re
D	W3 Re/W25 Re

©1995-2017 Dataforth Corporation, All Rights Reserved ISO9001:2008-Registered QMS

Specifications

Typical* at T_A = +25°C, 24VDC loop supply voltage, R_L = 250Ω; PT100, 3 wire, 0-600°C

Module	DSCP20
Input Range, Thermocouple	Reference Table 1
Thermocouple Types: B,E,J,K,N,R,S,T,L,U,C,D	
Cold Junction Compensation	
Internal	Incorporated Pt 100
External	0 to 60°C, Configurable
Input Resistance	>10MΩ
Input Range, RTD	Reference Table 1
RTD Types: Pt 100, Ni 100	
RTD Excitation Current	≤0.20mA
Input Resistance	>10MΩ
Lead Resistance	≤30Ω per Lead
Output Range	4 to 20mA or Inverse 20 to 4mA
Output Noise	<1% p-p
Loop Supply Voltage	12 to 30 VDC
Reverse Supply Protection	Continuous
Load Resistance	See Note 1
Output Response for Input Failure	Configurable to hold value of output immediately prior to input failure, or value between 4 and 21.6mA
Output Time Response	Configurable, see Table 2
Accuracy(2)	±0.1% Span Typ., ±0.2% Span max.†
Linearity	±0.03% Span Typ., ±0.1% Span max.
Stability	≤±(0.015%+0.015°C)/°C
Mechanical Dimensions (h)(w)(d)	2.44" x 0.67" x 2.56" (62mm x 17mm x 65mm)
Mounting	DIN EN 50022-35x7.5 or EN 50035-G32
Housing Material	Polyamide, Flammability Class V2 According to UL 94
Environmental	
Operating Temp. Range	–25°C to +80°C
Storage Temp. Range	–40°C to +80°C
Relative Humidity	0 to 75% Noncondensing
Emissions	EN50081-2 (Radiated, Conducted)
Immunity	EN50082-2 (ESD, RF, EFT)

NOTES:

*Contact factory or your local Dataforth sales office for maximum values.

(1) Load Resistance: $R^L(\max) = \frac{\text{Loop Supply (V)} - 12V}{I_{OUTPUT}(\max)}$

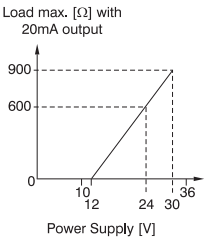

(2) Includes hysteresis, conformity and repeatability at reference conditions. Does not include CJC error.

(3) Shipped as PT 100 for 3-wire connection, 0 to 600°C range, 4 to 20mA output, open circuit detect = 21.6mA output.

(4) Downloadable from website.

(5) Many different ranges may be programmed as long as the min/max limits are observed. For minimum range examples, a K type thermocouple could be programmed for +30°C to +78.5°C, or +100°C to +149°C, or +900°C to +995°C, and so on.

Ordering Information

Model	Input Range/Description	Output Range
DSCP20 (Basic Configuration)(3)	Configurable RTD or Thermocouple, User Programmed	4 to 20mA, or Inverted

Accessories

Model	Description
DSCX-887	PC Interface Cable
DSCX-416	Module Interface Cable
DSCX-895(4)	Configuration Software

Table 1

Measured Variables	Measuring Ranges Limits	Min. Span	Max. Span
RTD: 2, 3, or 4-wire			
Pt 100, Standard IEC 60 751	–200 to +850°C	50°C	850°C
Ni 100, Standard DIN 43 760	–60 to +250°C	50°C	250°C
Thermocouple			
Type B, E, J, K, N, R, S, T; Standard IEC 60 584-1	According to type	2mV(5)	80mV(5)
Type L and U; Standard DIN 43 710			
Type C: W5 Re/W26 Re, Type D: W3 Re/W25 Re; Standard ASTM E 988-90			

Table 2: Output Response Times

Measuring Mode	Open Sensor Circuit	Short-Circuit	Possible Response Times [s]						
TC int. comp.	active	–	1.5	2.5	3.5	6.5	11	20.5	40
TC int. comp.	off	–	1.5	2.5	3.5	6.5	13.5	24.5	49.5
TC ext. comp.	active	–	1.5	2.5	3.5	6.5	11	20.5	40
TC ext. comp.	off	–	1.5	2.5	4	6.5	13.5	24.5	48.5
RTD 2L	active	–	2	2.5	3	5	9.5	17.5	33.5
RTD 3L, 4L	active	active	2	2.5	4	6.5	11.5	21	40.5
RTD 2L, 3L, 4L	off	off	1.5	2.5	3.5	7.5	14	26.5	50.5

†Additional Errors

Low Measuring Range		
Resistance Thermometer (<200°C Span)		±0.015% Span Typ., ±0.05% Span max
Thermocouples (<500°C Span)		±0.015% Span Typ., ±0.05% Span max
High Initial Value	Factor:	±0.0002 Typ., ±0.0005 max
	Error:	(Factor)*(Initial Value/Span)*100 [%]
Influence of Lead Resistance		±0.01% per Ω
Internal Cold Junction Compensation		±(0.5°C/Span)*(100) [%]

©1995-2017 Dataforth Corporation, All Rights Reserved ISO9001:2008-Registered QMS

Table 3: Temperature Measuring Ranges

Measuring range examples [°C]	Resistance thermometers (1)		Thermocouples (2)											
	Pt100	Ni100	B	E	J	K	L	N	R	S	T	U	C(3)	D(4)
0...40	X			X	X		X							
0...50	X	X		X	X	X	X				X	X		
0...60	X	X		X	X	X	X				X	X		
0...80	X	X		X	X	X	X	X			X	X		
0...100	X	X		X	X	X	X	X			X	X		
0...120	X	X		X	X	X	X	X			X	X		
0...150	X	X		X	X	X	X	X			X	X	X	
0...200	X	X		X	X	X	X	X			X	X	X	X
0...250	X	X		X	X	X	X	X			X	X	X	X
0...300	X			X	X	X	X	X	X	X	X	X	X	X
0...400	X			X	X	X	X	X	X	X	X	X	X	X
0...500	X			X	X	X	X	X	X	X		X	X	X
0...600	X			X	X	X	X	X	X	X		X	X	X
0...800	X		X	X	X	X	X	X	X	X			X	X
0...900			X	X	X	X	X	X	X	X			X	X
0...1000			X	X	X	X		X	X	X			X	X
0...1200			X		X	X		X	X	X			X	X
0...1500			X						X	X			X	X
0...1600			X						X	X			X	X
0... 1800			X										X	X
0... 2000													X	X
50...150	X	X		X	X	X	X	X			X	X		
100...300	X			X	X	X	X	X			X	X	X	X
200...500	X			X	X	X	X	X	X	X		X	X	X
300...600	X			X	X	X	X	X	X	X		X	X	X
600...900			X	X	X	X	X	X	X	X			X	X
600...1000			X	X	X	X		X	X	X			X	X
900...1200			X		X	X		X	X	X			X	X
600...1600			X						X	X			X	X
600...1800			X										X	X
-10...40	X	X		X	X	X	X					X		
-30...60	X	X		X	X	X	X	X			X	X		
Measuring range limits [°C]	–200 to 850	–60 to 250	0 to 1820	–270 to 1000	–210 to 1200	–270 to 1372	–200 to 900	–270 to 1300	–50 to 1769	–50 to 1769	–270 to 400	–200 to 600	0 to 2315	0 to 2315

NOTES:
(1) Minimum span is 15Ω when the end value(3) is less than or equal to 400Ω. Minimum span is 150Ω when the end value(3) is greater than 400Ω and not exceeding 4000Ω. The ratio of the min value to the span must be less than or equal to 10. For two-wire connections, the end value is made up of the measured end value (Ω) plus the total resistance of the leads.
(2) Range of span is 2mV minimum to 80mV maximum. The ratio of the min value to the span must be less than or equal to 10.
(3) W5 Re W26 Re (ASTM E 988-90)
(4) W3 Re W25 Re (ASTM E 988-90)

©1995-2017 Dataforth Corporation, All Rights Reserved ISO9001:2008-Registered QMS

Electrical Connections

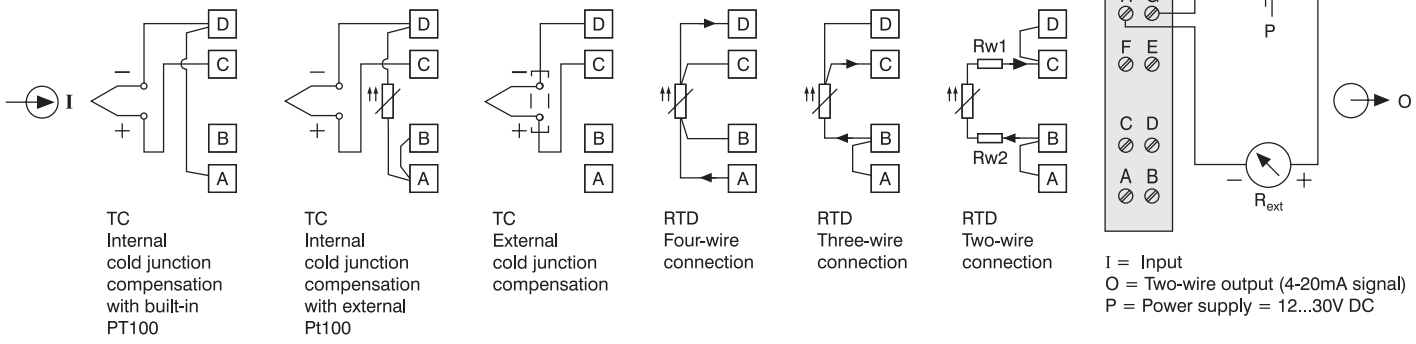

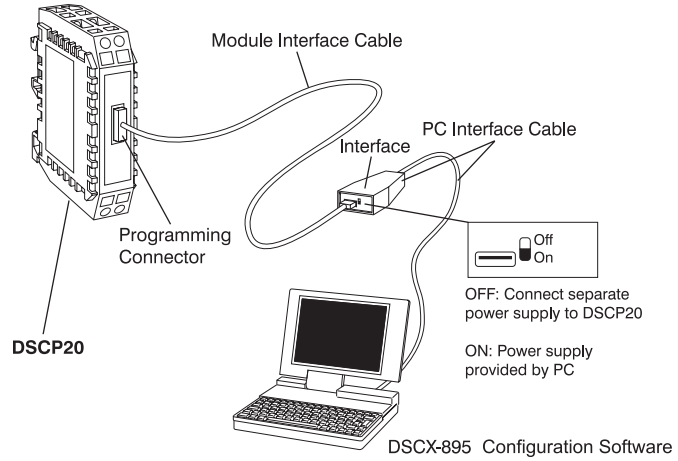

Example of the set-up for programming a DSCP20 without the power supply. For this case the switch on the interface must be set to "ON'. The DSCX-895 configuration software is downloadable from the website.

Table 4: Accessories and Spare Parts

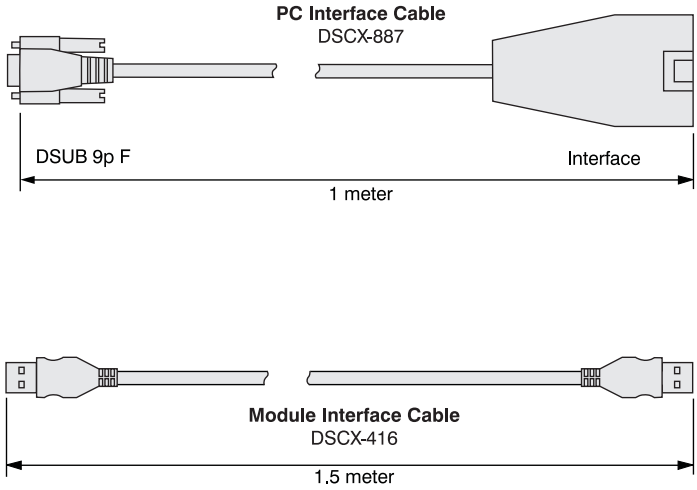

Dimensions

Dimensions: inches (millimeters)

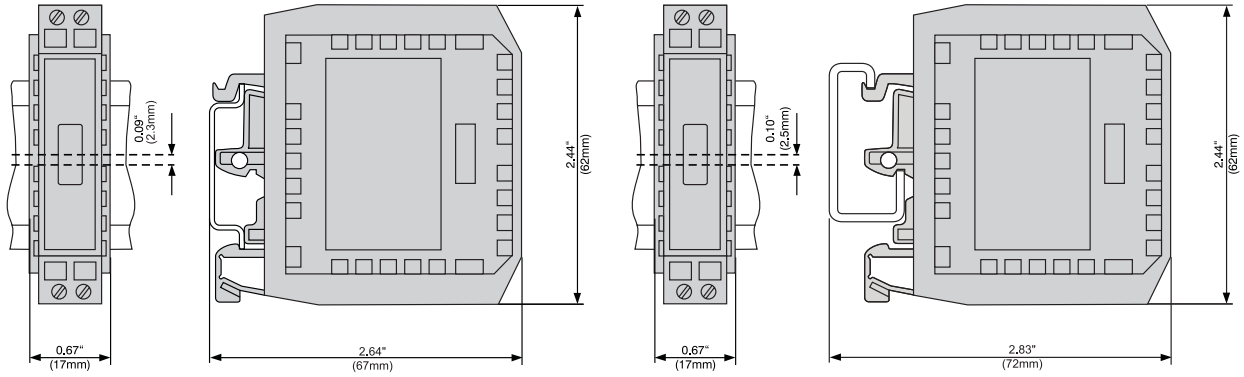

DSCP20 Clipped onto a Top-Hat Rail EN 50-022-35 x 7.5

DSCP20 Clipped onto a Rail "G" EN 50-035-G32

©1995-2017 Dataforth Corporation, All Rights Reserved ISO9001:2008-Registered QMS

DSCP55

Pt100, Ni100/Loop-Powered Converter

Description

Each DSCP55 RTD Loop-Powered Converter provides a single channel of RTD input which is amplified, linearized and converted to a high-level 4 to 20mA or 20 to 4mA output. Inputs may be connected by 2, 3, or 4 wires and measurement range may be configured by dip-switch.

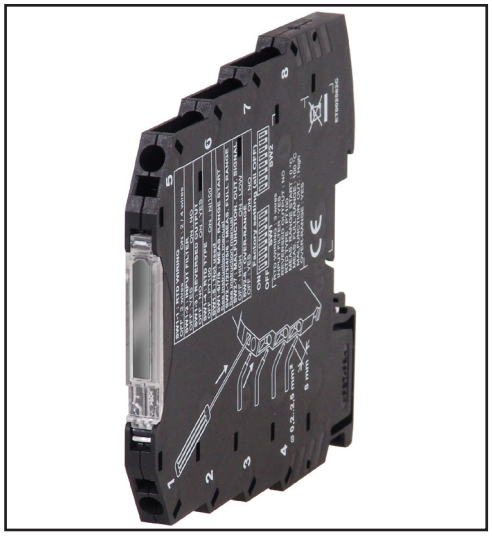

Features

- Input: Pt100 (–200°C to + 650°C)
  Ni100 (–60°C to + 250°C)
- Output Current: 4 to 20 or 20 to 4mA
- Spring Cage Clamp Connection
- 16-Bit Resolution
- Better than ±0.1% Accuracy
- Configuration by Dip-Switch
- Compact 6.2mm DIN Housing
- CE Compliant

Electrical Connections

Input

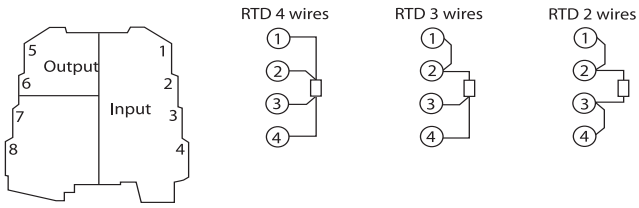

Output and power supply

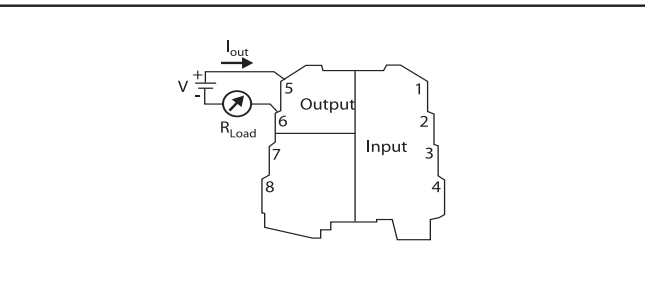

©1995-2017 Dataforth Corporation, All Rights Reserved ISO9001:2008-Registered QMS

Specifications

Typical* at T_A = +25°C and +24VDC loop power

Module	DSCP55
Input (selectable)	
Pt100 Probe	
EN 60751	Accepts 2-, 3-, or 4-wire RTDs Sensor current: 750µA Cable resistance: 25Ω (max) per wire Measurement range: – 200°C to +650°C (settable) Span: 20°C (min)
Ni100 Probe	Accepts 2-, 3-, or 4-wire RTDs Sensor current: 750µA Cable resistance: 25Ω (max) per wire Measurement range: –60°C to +250°C (settable) Span: 20°C (min)
Accuracy	±0.1% (max)
Thermal Drift	<100ppm/°K
A/D Conversion	16-bit
Response Time, 90% Span (selectable)	<220ms (without filter), <620ms (with filter)
Isolation	No
Dip-Switch Configuration	Sets input and output ranges, sensor type, filter and faults
Status Indicators (LED)	Internal fault, configuration error, connection fault
Output (selectable)	
Current	4 to 20 or 20 to 4mA Load resistance: 1200Ω (max)
Current Output Maximum	30mA
Fault Output	102.5% or 105% of full-scale value in case of over-range
Hot Swapping	Yes
Loop Supply Voltage	5 to 30VDC
Mechanical Dimensions (w x h x d)	0.24" x 3.67" x 4.04" (6.2mm x 93.1mm x 102.5mm)
Housing	Terminal housing for mounting on 35mm DIN 46277
Connections	Spring cage clamp
Weight	1.6 ounces (45g)
Environmental	
Operating Temp. Range	–20°C to +65°C
Storage Temp. Range	–40°C to +85°C
Relative Humidity	0 to 90%, Noncondensing
IP Protection	IP20
Emissions	EN61000-6-4
Immunity	EN61000-6-2

NOTES:
*Contact factory or your local Dataforth sales office for maximum values.

Ordering Information

Model	Description
DSCP55	Pt100, Ni100 Loop-Powered Converter

Dimensional Drawing

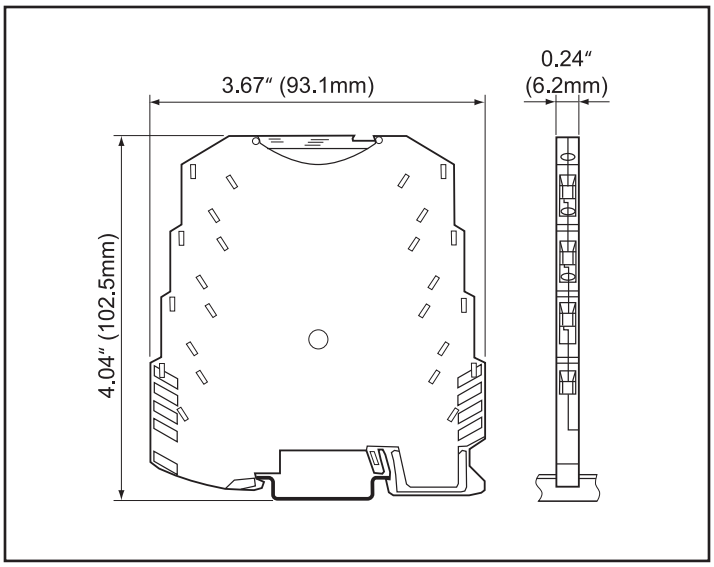

©1995-2017 Dataforth Corporation, All Rights Reserved ISO9001:2008-Registered QMS

DSCP61

Pt100-to-DC Current/Voltage Converter

Description

Each DSCP61 RTD Pt100 Converter provides a single channel of RTD input which is amplified, linearized and converted to a high-level current or voltage output. Inputs may be connected by 2, 3, or 4 wires and measurement range may be configured by dip-switch to cover a range of –150°C to +650°C. Power can be applied directly to the converter's terminals or through a DIN rail mounted bus connector accessory, eliminating the need to wire power to each individual converter.

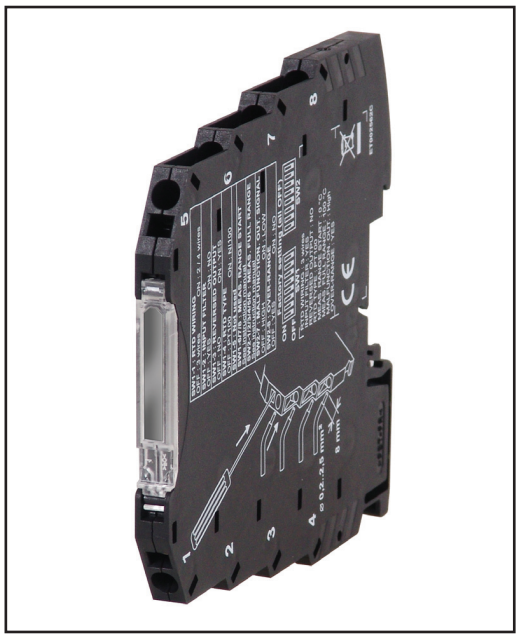

Features

- Input: Pt100 (2, 3, 4 wires, –150°C to +650°C)
- Output Current: 0 to 20, 4 to 20, 20 to 0, 20 to 4mA
- Output Voltage: 0 to 5, 1 to 5, 0 to 10, 10 to 0VDC
- 1500Vrms Galvanic Isolation, 3-Way
- 19.2 to 30VDC Power
- Spring Cage Clamp Connection
- 14-Bit Resolution
- Better than ±0.1% Accuracy
- Configuration by Dip-Switch
- Compact 6.2mm DIN Housing
- CE Compliant

Electrical Connections

Power supply

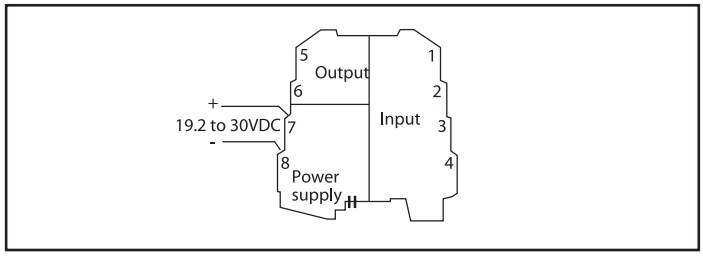

Input

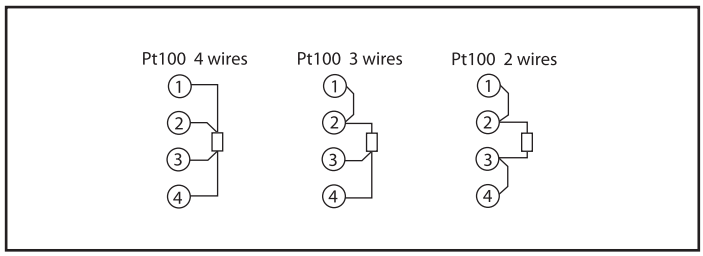

Output

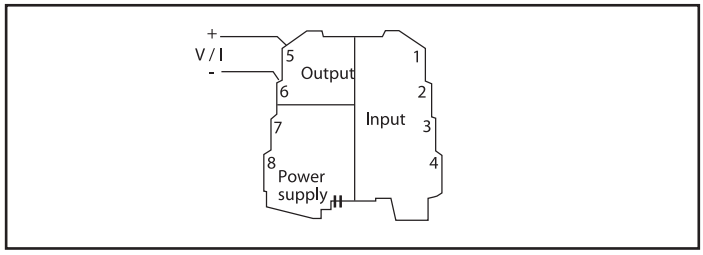

©1995-2017 Dataforth Corporation, All Rights Reserved ISO9001:2008-Registered QMS

Specifications

Typical* at T_A = +25°C and +24VDC loop power

Module	DSCP61
Input (selectable) Pt100 Probe EN 60751	 Accepts 2-, 3-, or 4-wire RTDs Sensor current: <900µA Cable resistance: 20Ω per wire (max) Measurement range: –150°C to +650°C (settable) Span: 50°C (min) Input voltage: 32VDC (max)
Accuracy Thermal Drift A/D Conversion Processing Response Time, 90% Span (selectable) Isolation Dip-Switch Configuration Status Indicators (LED)	±0.1% (max) <100ppm/°K 14-bit Floating point 32-bit <50ms (without filter), <200ms (with filter) 1500Vrms (1 minute), 3-Way Sets input and output ranges, sensor type, filter and faults Internal fault, configuration error, connection fault
Output (selectable) Current Current Output Maximum Fault Output Voltage	 0 to 20, 4 to 20, 20 to 0 or 20 to 4mA Load resistance: 500Ω (max) 25mA 102.5% or 105% of full-scale value in case of over-range 0 to 5, 1 to 5, 0 to 10 or 10 to 0VDC Load resistance: 2kΩ (min)
Power Supply Power Consumption Hot Swapping	19.2 to 30VDC 500mW (21mA at 24VDC) Yes
Mechanical Dimensions (w x h x d)	0.24" x 3.67" x 4.04" (6.2mm x 93.1mm x 102.5mm)
Housing	Terminal housing for mounting on 35mm DIN 46277
Connections	Spring cage clamp
Weight	1.8 ounces (50g)
Environmental Operating Temp. Range Storage Temp. Range Relative Humidity IP Protection Emissions Immunity	 –20°C to +65°C –40°C to +85°C 0 to 90%, Noncondensing IP20 EN61000-6-4 EN61000-6-2

Ordering Information

Model	Description
DSCP61	Pt100-to-DC Current/Voltage Converter

Accessories

Model	Description
DSCX-02	DIN Rail Expandable Power-Bus Connector
DSCP70	Power Supply Connection Module

NOTES: *Contact factory or your local Dataforth sales office for maximum values.

Installation

Inserting/extracting module on DIN guide

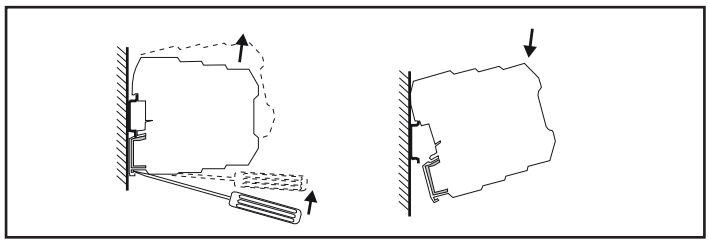

Expandable power-bus connector

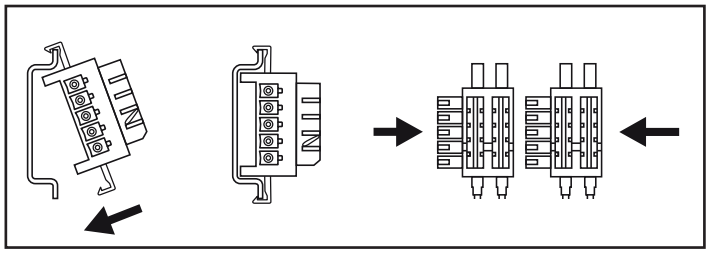

Spring cage clamp connection

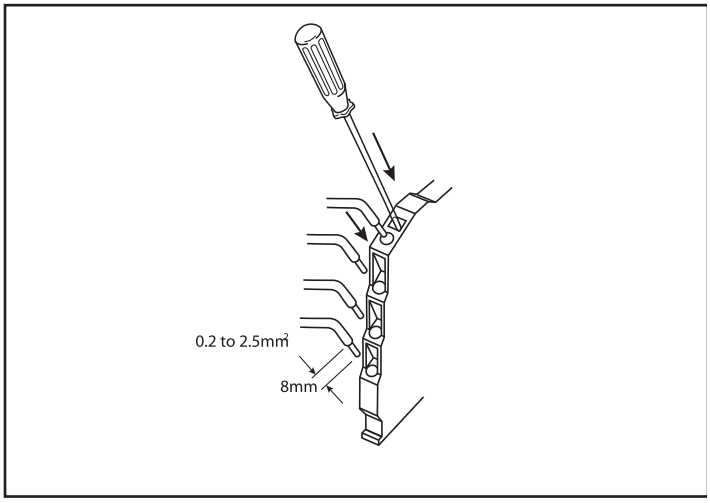

Dimensional Drawing

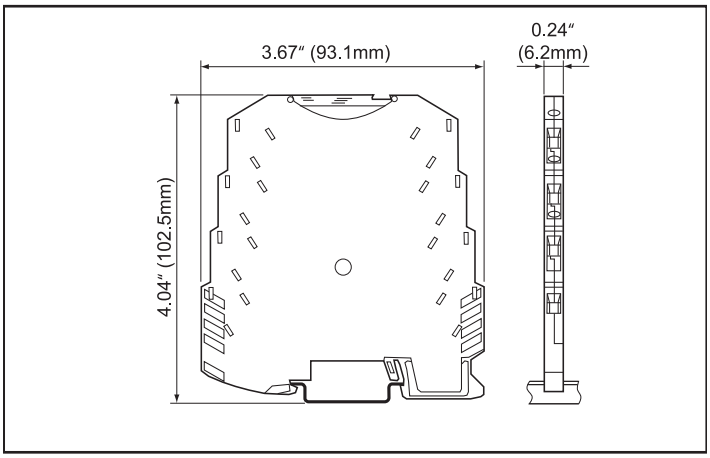

DSCP

©1995-2017 Dataforth Corporation, All Rights Reserved ISO9001:2008-Registered QMS

DSCP62

Thermocouple-to-DC Current/Voltage Converter with Relay Output

Description

Each DSCP62 Thermocouple Converter provides a single channel of thermocouple input which is amplified, linearized and converted to a high-level current or voltage output. Thermocouple type, measurement range, filter, output type and range, and fault indication may be configured by dip-switch. An auxiliary relay output is provided to generate an alarm or act as a ther-mostat. Power can be applied directly to the converter's terminals or through a DIN rail mounted bus connector accessory, eliminating the need to wire power to each individual converter.

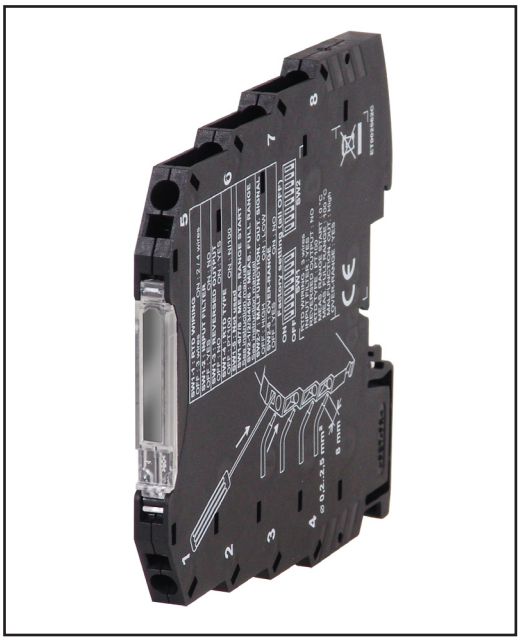

Features

- Input: Thermocouple types J, K, E, N, S, R, B, T
- Output Current: 0 to 20, 4 to 20, 20 to 0, 20 to 4mA
- Output Voltage: 0 to 5, 1 to 5, 0 to 10, 10 to 0VDC
- Auxiliary Relay for Alarm or Control
- 1500Vrms Galvanic Isolation, 3-Way
- 19.2 to 30VDC Power
- Spring Cage Clamp Connection
- 14-Bit Resolution
- Better than ±0.1% Accuracy
- Configuration by Dip-Switch
- Compact 6.2mm DIN Housing
- CE Compliant

Electrical Connections

Power supply

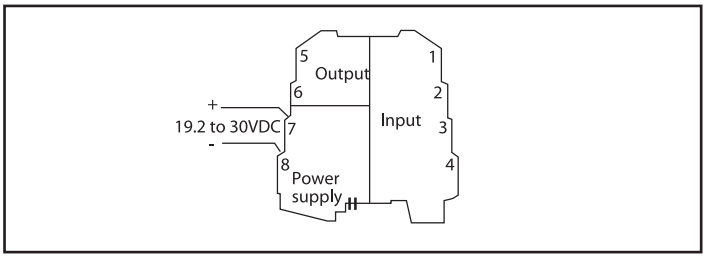

Input

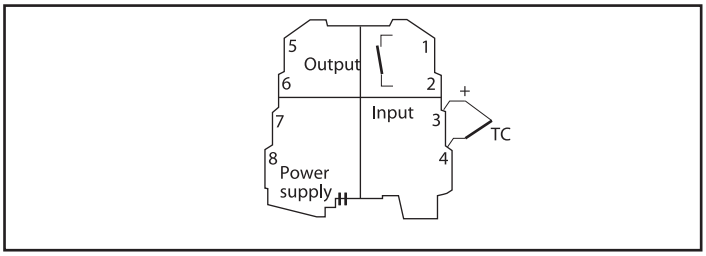

Output

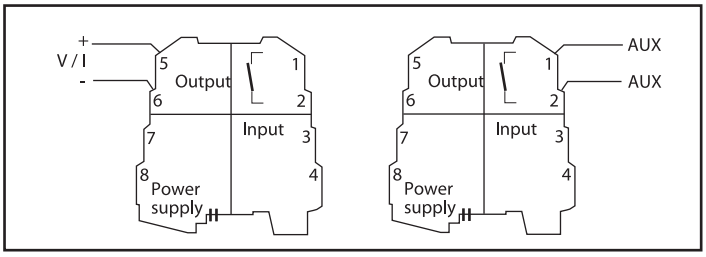

©1995-2017 Dataforth Corporation, All Rights Reserved ISO9001:2008-Registered QMS

Specifications

Typical* at T_A = +25°C and +24VDC loop power

Module	DSCP62
Input (selectable)	
Thermocouple Type	J, K, E, N, S, R, B, T
EN 60584-1	Measurement range: Depends on thermocouple type and dip-switch setting Span: 100°C (min)
Input Impedance	10MΩ
Accuracy	±0.1% (max)
Cold Junction Error	1.5°C (max)
Thermal Drift	<120ppm/°K
A/D Conversion	14-bit
Processing	Floating point 32-bit
Response Time, 90% Span (selectable)	<25ms (without filter), <55ms (with filter)
CMRR	>135dB, referred to power supply side
Isolation	1500Vrms (1 minute), 3-Way
Dip-Switch Configuration	Sets input and output ranges, sensor type, filter and faults
Status Indicators (LED)	Internal fault, configuration error, connection fault
Output (selectable)	
Current	0 to 20, 4 to 20, 20 to 0 or 20 to 4mA Load resistance: 500Ω (max)
Current Output Protection	25mA (max)
Fault Output	102.5% or 105% of full-scale value in case of over-range
Voltage	0 to 5, 1 to 5, 0 to 10 or 10 to 0VDC Load resistance: 2kΩ (min)
Auxiliary Relay Output	Rated 60mA (max) at 24VAC
Power Supply	19.2 to 30VDC
Power Consumption	<600mW (24mA at 24VDC)
Hot Swapping	Yes
Mechanical Dimensions (w x h x d)	0.24" x 3.67" x 4.04" (6.2mm x 93.1mm x 102.5mm)
Housing	Terminal housing for mounting on 35mm DIN 46277
Connections	Spring cage clamp
Weight	1.6 ounces (46g)
Environmental	
Operating Temp. Range	–20°C to +65°C
Storage Temp. Range	–40°C to +85°C
Relative Humidity	0 to 90%, Noncondensing
IP Protection	IP20
Emissions	EN61000-6-4
Immunity	EN61000-6-2

Ordering Information

Model	Description
DSCP62	Thermocouple Converter

Accessories

Model	Description
DSCX-02	DIN Rail Expandable Power-Bus Connector
DSCP70	Power Supply Connection Module

NOTES:
*Contact factory or your local Dataforth sales office for maximum values.

Installation

Inserting/extracting module on DIN guide

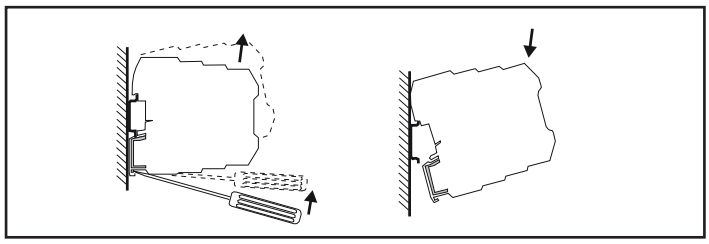

Expandable power-bus connector

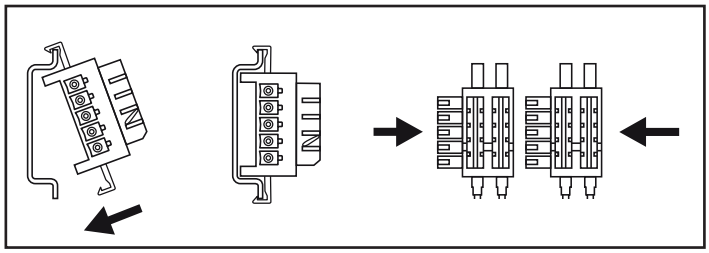

Spring cage clamp connection

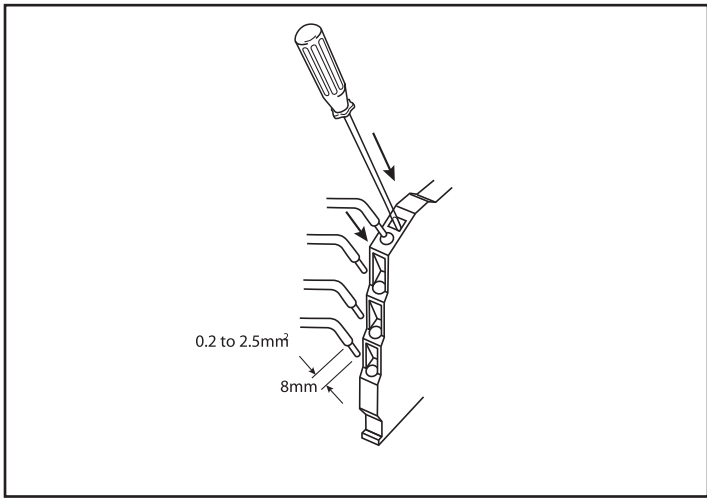

Dimensional Drawing

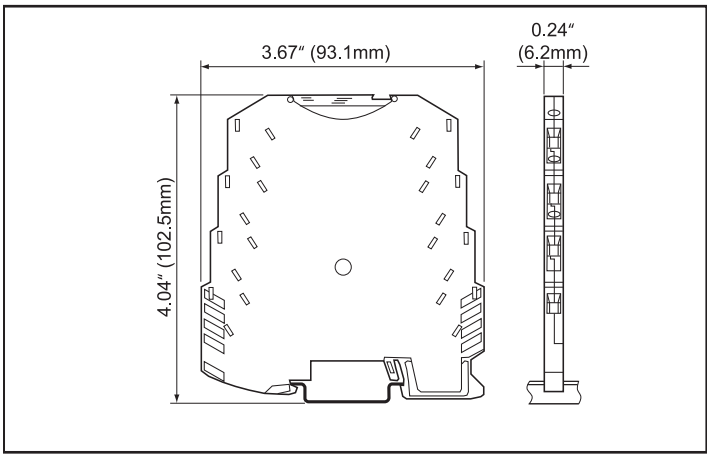

©1995-2017 Dataforth Corporation, All Rights Reserved ISO9001:2008-Registered QMS

DSCP63

DC Voltage/Current Converter

Description

Each DSCP63 Voltage/Current Converter provides a single channel of voltage or current input which is converted to a voltage or current output. It is designed for industrial standard voltage or current signals. Input/output range, filter, fault indication, square root function and other functions may be configured by dip-switch. Power can be applied directly to the converter's terminals or through a DIN rail mounted bus connector accessory, eliminating the need to wire power to each individual converter.

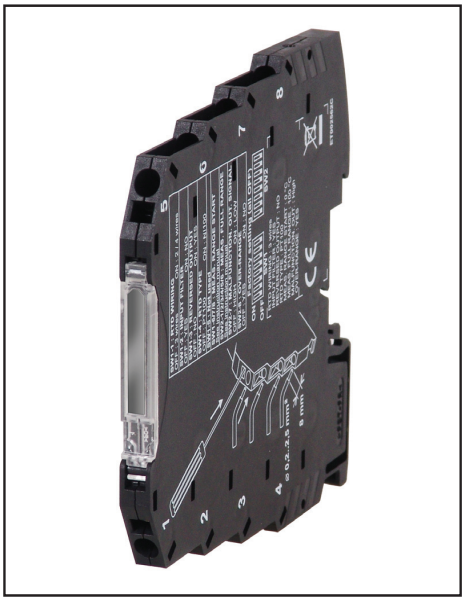

Features

- Input Voltage: 0 to 5, 0 to 10, 0 to 15, 0 to 30, 1 to 5, 2 to 10VDC
- Input Current: 0 to 20, 4 to 20mA
- Output Voltage: 0 to 5, 0 to 10, 1 to 5, 2 to 10VDC
- Output Current: 0 to 20, 4 to 20, 20 to 0, 20 to 4mA
- 1500Vrms Galvanic Isolation, 3-Way
- 19.2 to 30VDC Power
- Spring Cage Clamp Connection
- 14-Bit Resolution
- Better than ±0.1% Accuracy
- Configuration by Dip-Switch
- Compact 6.2mm DIN Housing
- CE Compliant

Electrical Connections

Power supply

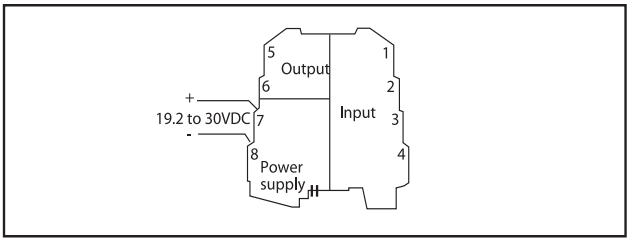

Input

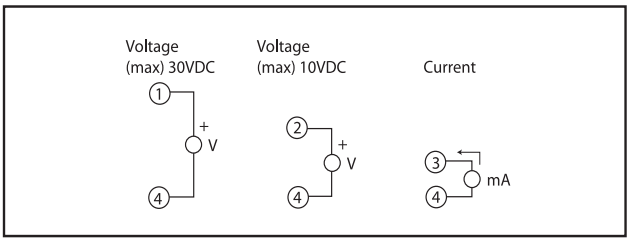

Output

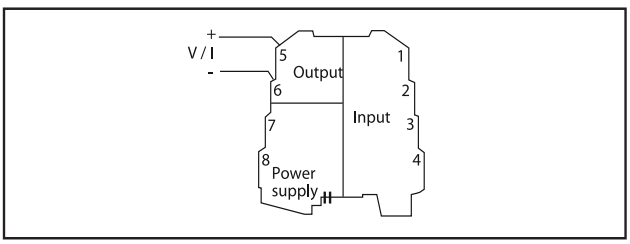

©1995-2017 Dataforth Corporation, All Rights Reserved ISO9001:2008-Registered QMS

Specifications

Typical* at T_A = +25°C and +24VDC loop power

Module	DSCP63
Input (selectable)	
Voltage (maximum 50VDC)	0 to 15, 0 to 30VDC (input R = 325kΩ)
Voltage (maximum 30VDC)	0 to 5, 1 to 5, 0 to 10, 2 to 10VDC (input R = 110kΩ)
Current (maximum 24mA)	0 to 20, 4 to 20mA (input R = 35Ω)
Accuracy	±0.1% (max)
Thermal Drift	<120ppm/°K
A/D Conversion	14-bit
Processing	Floating point 32-bit
Response Time, 90% Span, (selectable)	<35ms (without filter), <74ms (with filter)
Isolation	1500Vrms (1 minute), 3-Way
Dip-Switch Configuration	Sets input and output ranges, filter and faults
Status Indicators (LED)	Internal fault, configuration error, connection fault
Output (selectable)	
Current	0 to 20, 4 to 20, 20 to 0 or 20 to 4mA Load resistance: 500Ω (max)
Current Output Maximum	25mA
Fault Output	102.5% or 105% of full-scale value in case of over-range
Voltage	0 to 5, 1 to 5, 0 to 10 or 2 to 10VDC Load resistance: 2kΩ (min)
Power Supply	19.2 to 30VDC
Power Consumption	<600mW (22mA at 24VDC)
Hot Swapping	Yes
Mechanical Dimensions (w x h x d)	0.24" x 3.67" x 4.04" (6.2mm x 93.1mm x 102.5mm)
Housing	Terminal housing for mounting on 35mm DIN 46277
Connections	Spring cage clamp
Weight	1.8 ounces (50g)
Environmental	
Operating Temp. Range	–20°C to +65°C
Storage Temp. Range	–40°C to +85°C
Relative Humidity	0 to 90%, Noncondensing
IP Protection	IP20
Emissions	EN61000-6-4
Immunity	EN61000-6-2

Ordering Information

Model	Description
DSCP63	DC Voltage/Current Converter

Accessories

Model	Description
DSCX-02	DIN Rail Expandable Power-Bus Connector
DSCP70	Power Supply Connection Module

NOTES:
*Contact factory or your local Dataforth sales office for maximum values.

Installation

Inserting/extracting module on DIN guide

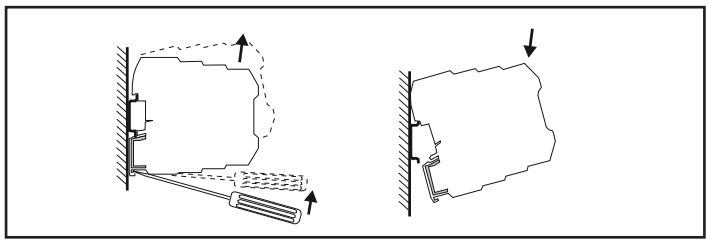

Expandable power-bus connector

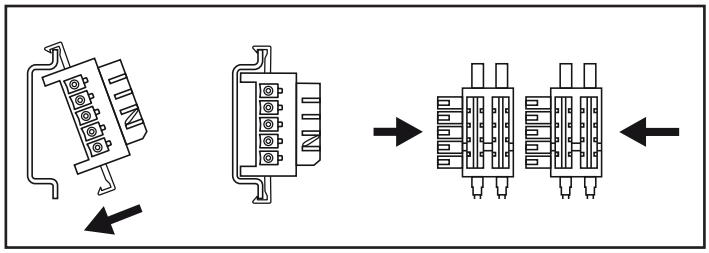

Spring cage clamp connection

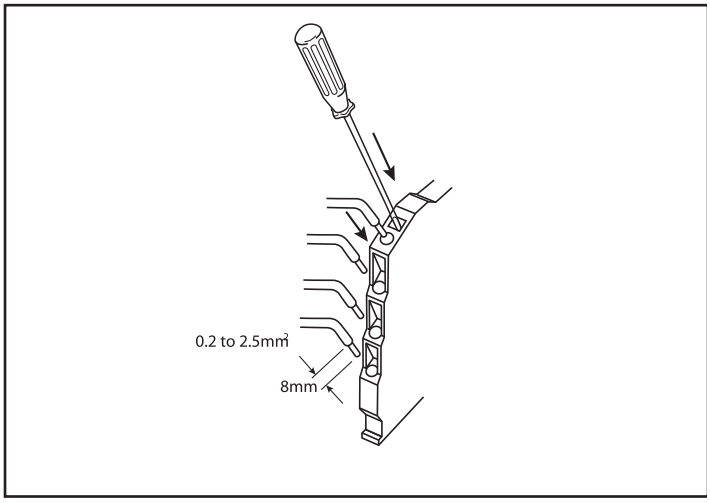

Dimensional Drawing

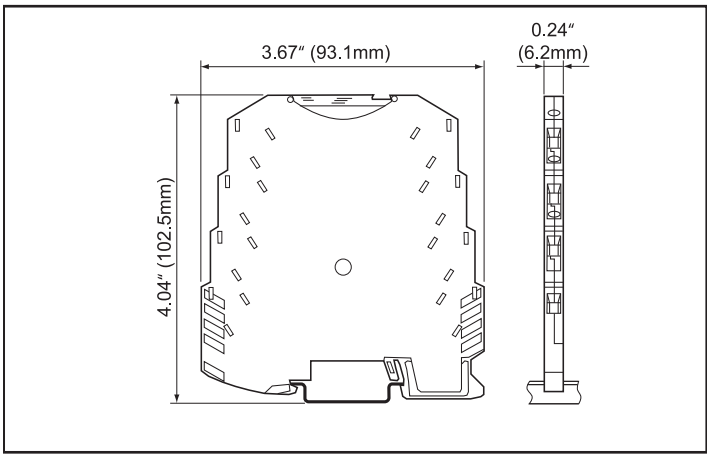

DSCP

©1995-2017 Dataforth Corporation, All Rights Reserved ISO9001:2008-Registered QMS

DSCP64

DC Voltage/Current Converter with Transducer Power Supply

Description

Each DSCP64 Voltage/Current Converter provides a single channel of voltage or current input which is converted to a current or voltage output. An auxiliary power supply is provided for powering the input transducer/ sensor. It is designed for industrial standard voltage or current signals. Input/output range, filter, fault indication, square root function and other functions may be configured by dip-switch. Power can be applied directly to the converter's terminals or through a DIN rail mounted bus connector accessory, eliminating the need to wire power to each individual converter.

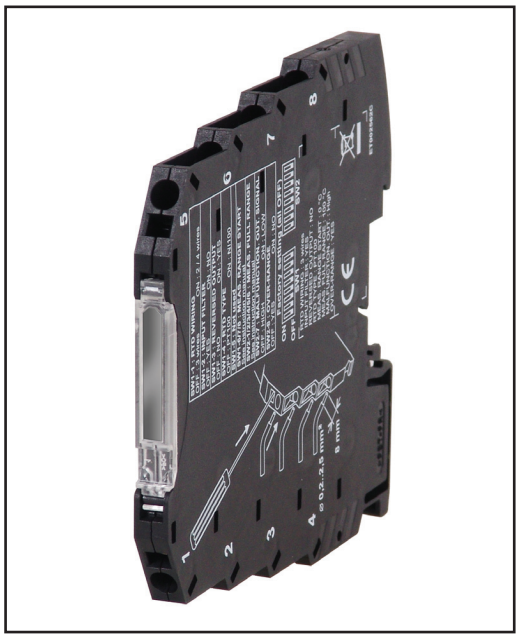

Features

- Input Voltage: 0 to 5, 0 to 10, 1 to 5, 2 to 10VDC
- Input Current: 0 to 20, 4 to 20mA
- Output Voltage: 0 to 5, 0 to 10, 1 to 5, 2 to 10VDC
- Output Current: 0 to 20, 4 to 20, 20 to 0, 20 to 4mA
- 1500Vrms Galvanic Isolation, 4-Way
- 19.2 to 30VDC Power
- Spring Cage Clamp Connection
- 14-Bit Resolution
- Better than ±0.1% Accuracy
- Configuration by Dip-Switch
- Compact 6.2mm DIN Housing
- CE Compliant

Electrical Connections

Power supply

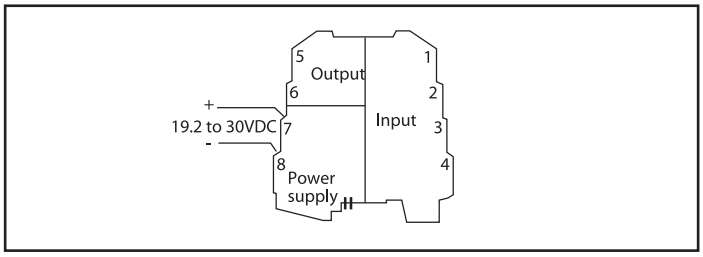

Input

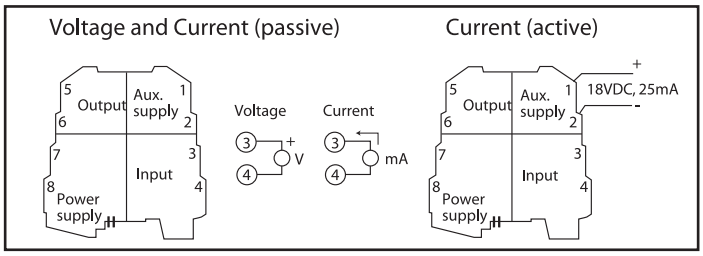

Output

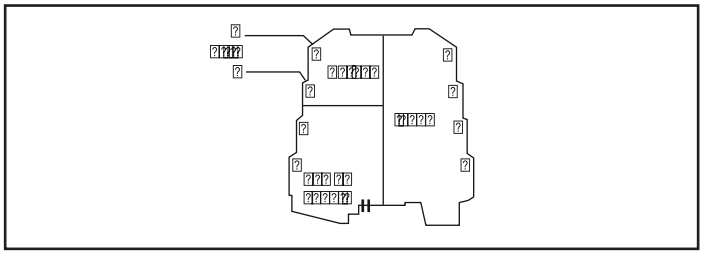

©1995-2017 Dataforth Corporation, All Rights Reserved ISO9001:2008-Registered QMS

Specifications

Typical* at T_A = +25°C and +24VDC loop power

Module	DSCP64
Input (selectable) Voltage Current	 0 to 5, 1 to 5, 0 to 10, 2 to 10VDC (input R = 110kΩ) 0 to 20, 4 to 20mA (input R = 35Ω)
Accuracy Thermal Drift A/D Conversion Processing Response Time, 90% Span, (selectable) Isolation Dip-Switch Configuration Status Indicators (LED)	±0.1% (max) <120ppm/°K 14-bit Floating point 32-bit <35ms (without filter), <74ms (with filter) 1500Vrms (1 minute), 3-Way Sets input and output ranges, filter and faults Internal fault, configuration error, connection fault
Output (selectable) Current Current Output Maximum Fault Output Voltage Auxiliary Power Supply	 0 to 20, 4 to 20, 20 to 0 or 20 to 4mA Load resistance: 500Ω (max) 25mA 102.5% or 105% of full-scale value in case of over-range 0 to 5, 1 to 5, 0 to 10 or 2 to 10VDC Load resistance: 2kΩ (min) 17 to 21VDC, 0 to 25mA
Power Supply Power Consumption Hot Swapping	19.2 to 30VDC 23mA (max) at 24VDC with output at 20mA and auxiliary supply not used 45mA (max) at 24VDC with output at 21mA and auxilliary supply at 21mA Yes
Mechanical Dimensions (w x h x d)	0.24" x 3.67" x 4.04" (6.2mm x 93.1mm x 102.5mm)
Housing	Terminal housing for mounting on 35mm DIN 46277
Connections	Spring cage clamp
Weight	1.6 ounces (46g)
Environmental Operating Temp. Range Storage Temp. Range Relative Humidity IP Protection Emissions Immunity	 –20°C to +65°C –40°C to +85°C 0 to 90%, Noncondensing IP20 EN61000-6-4 EN61000-6-2

Ordering Information

Model	Description
DSCP64	DC Voltage/Current Converter

Accessories

Model	Description
DSCX-02	DIN Rail Expandable Power-Bus Connector
DSCP70	Power Supply Connection Module

NOTES:
*Contact factory or your local Dataforth sales office for maximum values.

Installation

Inserting/extracting module on DIN guide

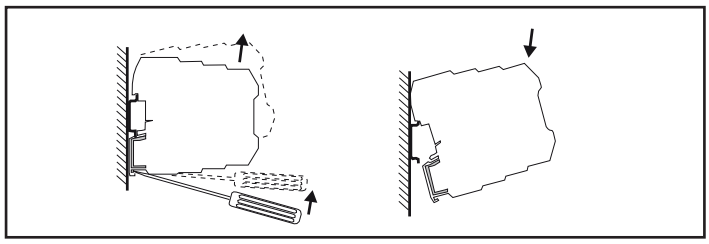

Expandable power-bus connector

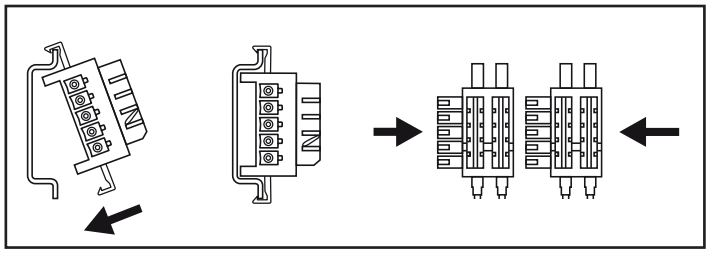

Spring cage clamp connection

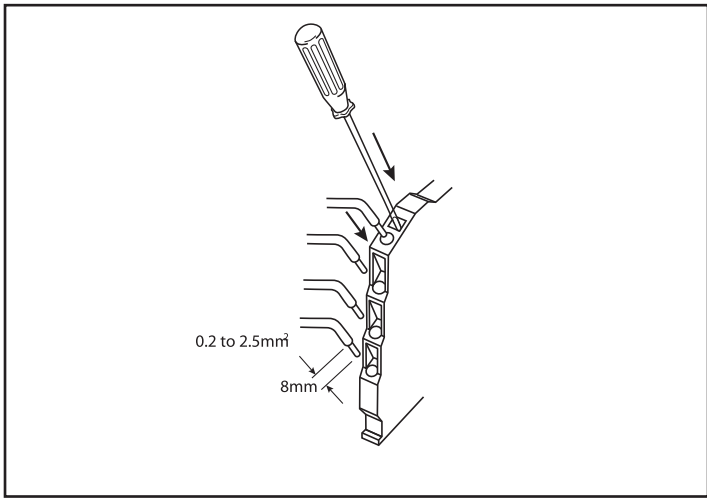

Dimensional Drawing

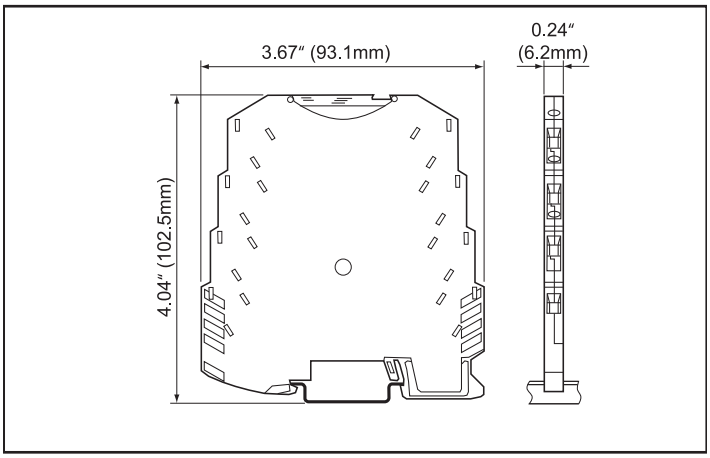

DSCP

©1995-2017 Dataforth Corporation, All Rights Reserved ISO9001:2008-Registered QMS

DSCP65

DC Low Voltage Converter

Description

Each DSCP65 Low Voltage Converter provides a single channel of low voltage input which is converted to a current or voltage output. It is designed for industrial standard voltage or current signals. Input/output range, filter, fault indication, and other functions may be configured by dip-switch. Power can be applied directly to the converter's terminals or through a DIN rail mounted bus connector accessory, eliminating the need to wire power to each individual converter.

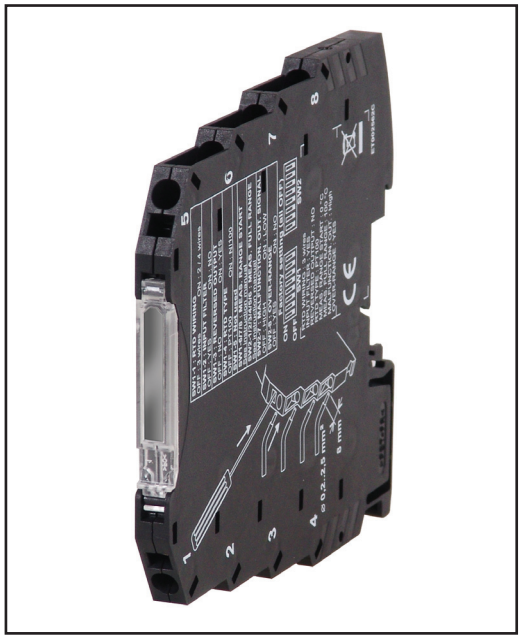

Features

- Input Voltage: 25mV to 2VDC in 15 Settable Steps
- Output Voltage: 0 to 5, 1 to 5, 0 to 10, 2 to 10VDC
- Output Current: 0 to 20, 4 to 20, 20 to 0, 20 to 4mA
- 1500Vrms Galvanic Isolation, 3-Way
- 19.2 to 30VDC Power
- Spring Cage Clamp Connection
- 14-Bit Resolution
- Better than ±0.1% Accuracy
- Configuration by Dip-Switch
- Compact 6.2mm DIN Housing
- CE Compliant

Electrical Connections

Power supply

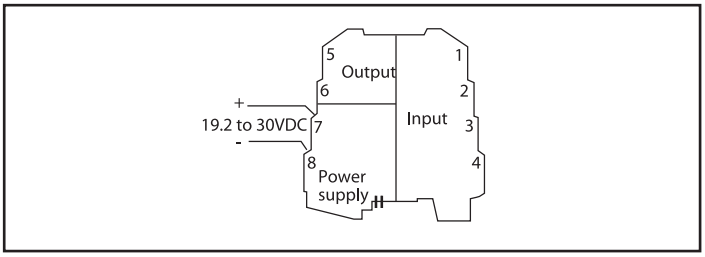

Input

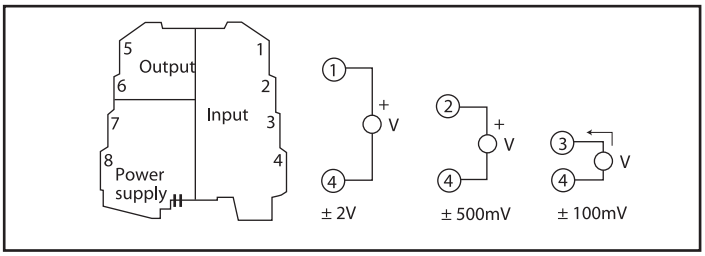

Output

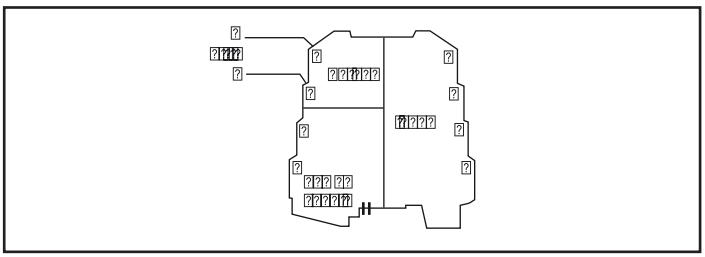

©1995-2017 Dataforth Corporation, All Rights Reserved ISO9001:2008-Registered QMS

Specifications

Typical* at T_A = +25°C and +24VDC loop power

Module	DSCP65
Input (selectable)	
Voltage (Terminals 3 and 4)	25, 50, 60, 75, 80, or 100mV (input R = 50kΩ)
Voltage (Terminals 2 and 4)	120, 150, 200, 250, 300, 400, or 500mV (input R = 250kΩ)
Voltage (Terminals 1 and 4)	1000 or 2000mV (input R = 1MΩ)
Maximum Input Voltage	±50VDC
Accuracy	±0.1% (max)
Thermal Drift	<120ppm/°K
A/D Conversion	14-bit
Processing	Floating point 32-bit
Response Time, 90% Span (selectable)	<23ms (without filter), <51ms (with filter)
CMRR	>160dB
Isolation	1500Vrms (1 minute), 3-Way
Dip-Switch Configuration	Sets input and output ranges, filter and faults
Status Indicators (LED)	Internal fault, configuration error, connection fault
Output (selectable)	
Current	0 to 20, 4 to 20, 20 to 0 or 20 to 4mA Load resistance: 500Ω (max)
Current Output Maximum	25mA
Fault Output	102.5% or 105% of full-scale value in case of over-range
Voltage	0 to 5, 1 to 5, 0 to 10 or 2 to 10VDC Load resistance: 2kΩ (min)
Voltage Output Maximum	12.5VDC
Power Supply	19.2 to 30VDC
Power Consumption	<600mW (22mA at 24VDC)
Hot Swapping	Yes
Mechanical Dimensions (w x h x d)	0.24" x 3.67" x 4.04" (6.2mm x 93.1mm x 102.5mm)
Housing	Terminal housing for mounting on 35mm DIN 46277
Connections	Spring cage clamp
Weight	1.6 ounces (46g)
Environmental	
Operating Temp. Range	–20°C to +65°C
Storage Temp. Range	–40°C to +85°C
Relative Humidity	0 to 90%, Noncondensing
IP Protection	IP20
Emissions	EN61000-6-4
Immunity	EN61000-6-2

Ordering Information

Model	Description
DSCP65	DC Low Voltage Converter

Accessories

Model	Description
DSCX-02	DIN Rail Expandable Power-Bus Connector
DSCP70	Power Supply Connection Module

NOTES:
*Contact factory or your local Dataforth sales office for maximum values.

Installation

Inserting/extracting module on DIN guide

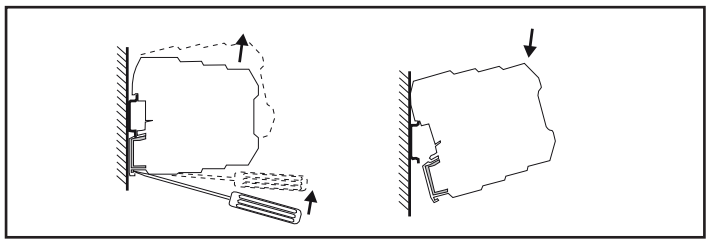

Expandable power-bus connector

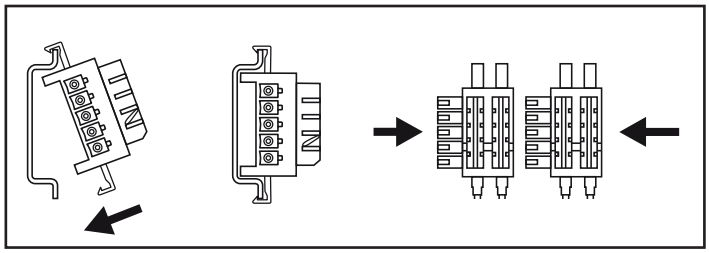

Spring cage clamp connection

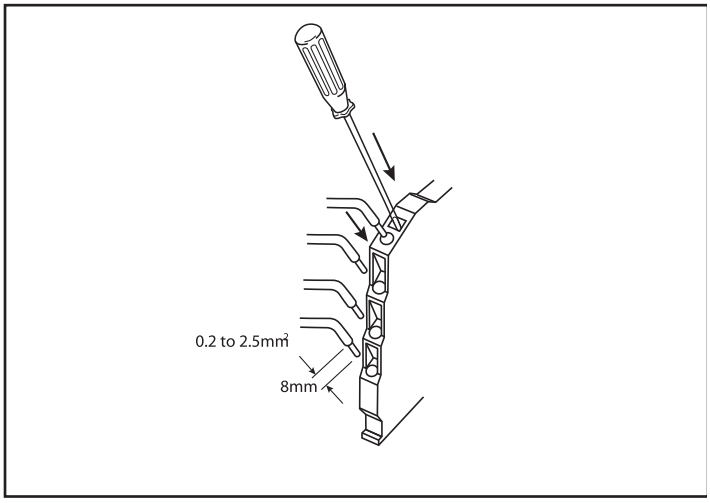

Dimensional Drawing

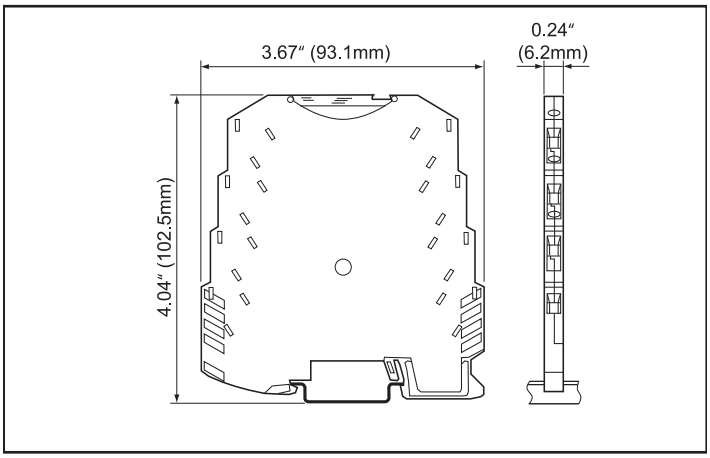

DSCP

©1995-2017 Dataforth Corporation, All Rights Reserved ISO9001:2008-Registered QMS

DSCP70

Power Supply Connection Module for DIN Rail Power Bus

Description

Each DSCP70 Power Supply Connection Module permits the delivery of power to DSCP6x modules through DIN rail mounted power-bus connectors. An external power supply, or supplies for redundant operation, are connected to the terminals of the DSCP70. The DSCP70 then routes the power to the DIN rail power-bus, provides protection against power supply reversal, provides LED status indication of correct power, inverted power connection and presence of AC, and provides over-voltage protection.

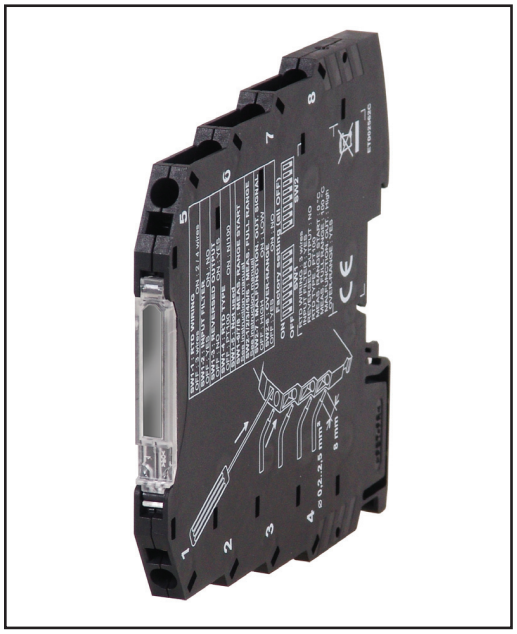

Features

- Delivers Power to DSCP6x Modules via DIN Rail
- Two Independent Inputs Allow Redundant Power
- LED Indication of Power Supply Presence
- LED Indication of Reversed Power Connection
- 19.2 to 30VDC Power
- Spring Cage Clamp Connection
- Compact 6.2mm DIN Housing
- CE Compliant

Electrical Connections

Example of connection with redundant power supply

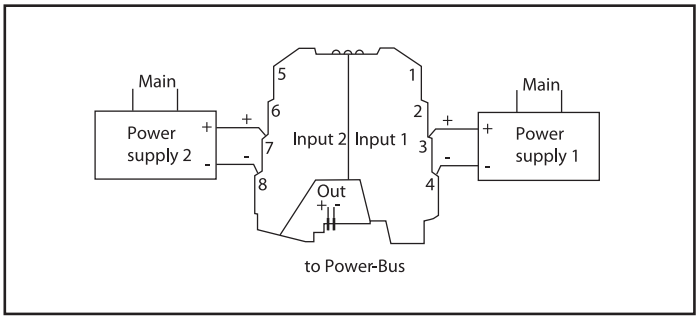

Example of connection to more than one bus

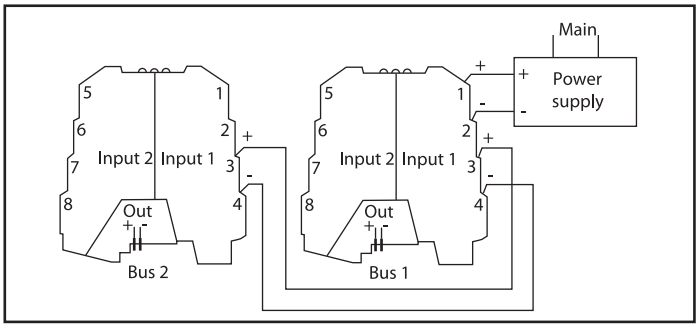

Example of connection with inputs connected in parallel: 2A output

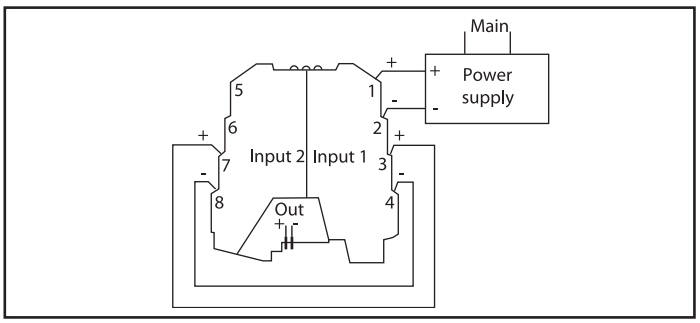

©1995-2017 Dataforth Corporation, All Rights Reserved ISO9001:2008-Registered QMS

Specifications

Typical* at T_A = +25°C and +24VDC loop power

Module	DSCP70
Input Voltage Current Capacity Protection	 19.2 to 30VDC 4A maximum per terminal Each positive input must have an external fuse
Output Internal Voltage Drop Current Capacity Filter Power Consumption	 300mV One input = 1.6A parallel inputs 1 and 2 = 2A Differential mode: 4.7mH and two 470nF per input 5mA per input maximum
Mechanical Dimensions (w x h x d)	0.24" x 3.67" x 4.04" (6.2mm x 93.1mm x 102.5mm)
Housing	Terminal housing for mounting on 35mm DIN 46277
Connections	Spring cage clamp
Weight	1.6 ounces (46g)
Environmental Operating Temp. Range Storage Temp. Range Relative Humidity IP Protection Emissions Immunity	 –20°C to +65°C –40°C to +85°C 0 to 90%, Noncondensing IP20 EN61000-6-4 EN61000-6-2

Ordering Information

Model	Description
DSCP70	Power Supply Connection Module
DSCX-02	DIN Rail Expandable Power-Bus Connector

NOTES:
*Contact factory or your local Dataforth sales office for maximum values.

Installation

Internal wiring

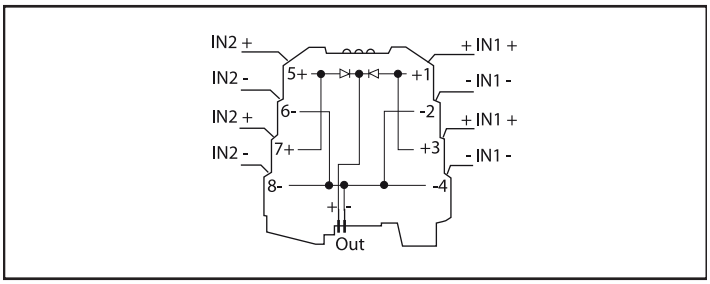

Expandable power-bus connector

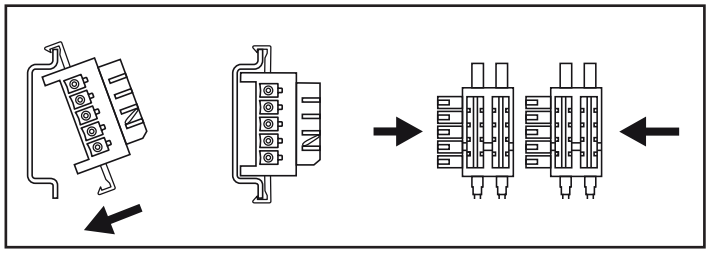

Spring cage clamp connection

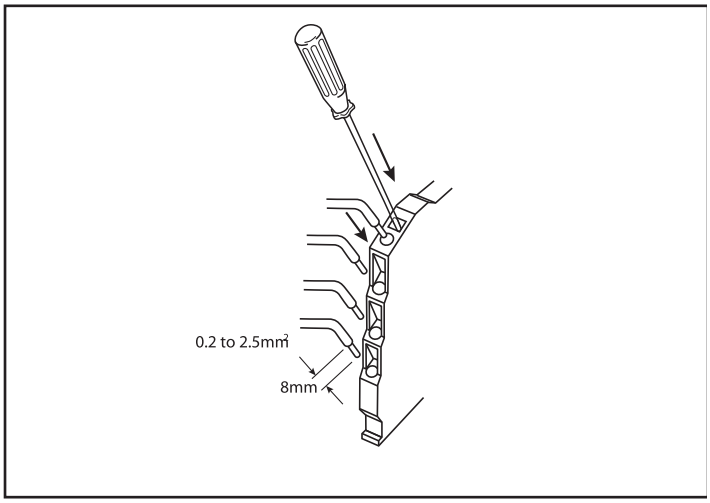

Dimensional Drawing

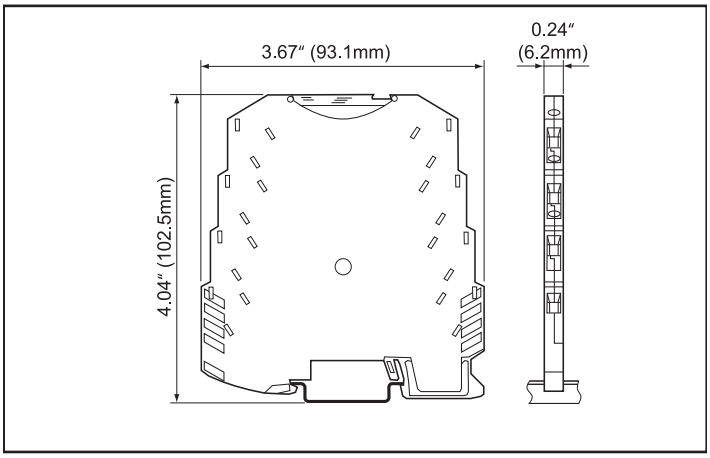

DSCP

©1995-2017 Dataforth Corporation, All Rights Reserved ISO9001:2008-Registered QMS

DSCP81

Configurable Voltage/Current Input Signal Conditioners, DIN Mount

Description

Each isolated DSCP81 signal conditioner is designed for measuring voltages up to ±1000VDC and currents up to ±100mA. The input type, measurement range, and other features are software configurable. A PC with RS-232C serial port, the DSCX-787 and DSCX-587 interface cables, and the DSCX-557 configuration software are required to program the DSCP81.

The DSCP81 can interface to either a current or voltage input and provide a current or voltage output (Figure 1). The input filter characteritics, input and output ranges, input signal linearization, signal inversion, and optional alarm relay output are all software configurable by the user. The input signal may be linearized using up to 50 points of interpolation. Optionally, the user may specify all configurable parameters.

Two models are available offering wide-range power supply connection: 24 to 60VDC/AC, and 85 to 230VDC/AC. The DSCX-557 configuration software allows query, print-out and saving of configuration settings, display of input measurement value, and display of interpolation table points.

Features

- Interfaces to Voltages up to ±1000VDC and Currents up to ±100mA
- Software Configurable Input Type and Range
- Software Configurable Filter
- 3700Vrms Transformer Isolation
- Supply Voltage of 24 to 60VDC/AC or 85 to 230VDC/AC
- Alarm Relay Output
- Mounts on Standard DIN Rail
- –25C to +55C Operating Temperature
- CE Compliant

There is impending danger of high voltage on any DSCP81 connections from high input voltage or high power supply voltage.

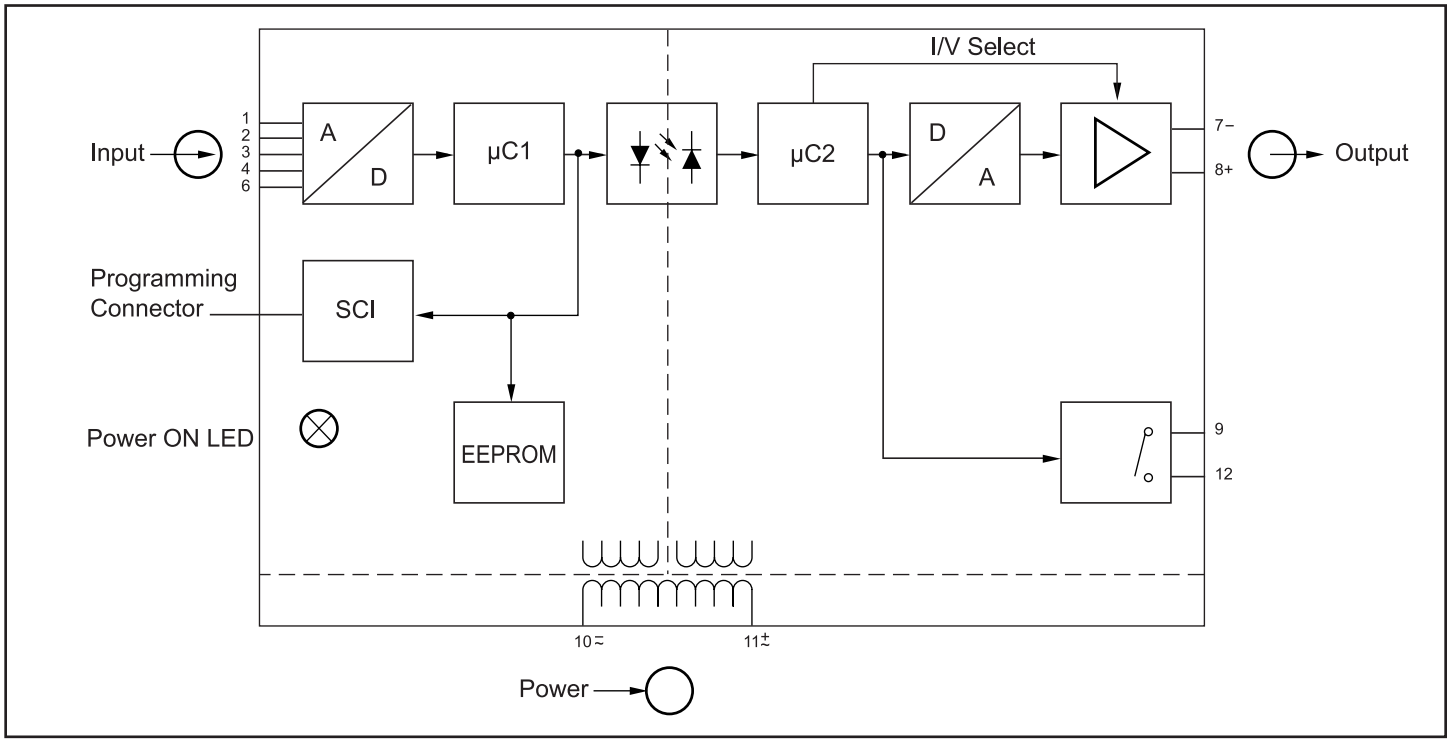

Figure 1: DSCP81 Block Diagram

©1995-2017 Dataforth Corporation, All Rights Reserved ISO9001:2008-Registered QMS

Specifications Typical* at T_A = +25°C and 24VDC or 230VAC ±10% supply voltage

Module	DSCP81
Input Range, Voltage	–1000VDC to +1000VDC max, Configurable
Input Resistance	1MΩ (V_{IN}≤±1.7V), 540kΩ (V_{IN}>±1.7V to ≤±100V), 5.5MΩ (V_{IN}>±100V to ±1000V)
Input Range, Current	–100mA to +100mA max, Configurable
Input Resistance	1kΩ (I_{IN} = –1.5mA to +1.5mA), 15.4Ω (I_{IN} = –100mA to +100mA)
Output Range, Voltage	–10V to +10V max, Configurable
V Limit Under Overload	Approx. ±11V
Short Circuit Current	≤60mA
External Resistance	R_{ext}min (kΩ)≥V_{ev}/10mA Note: V_{ev} = Output Voltage End Value
Output Range, Current	–20mA to +20mA max, Configurable
Output Load Voltage	12V
Current Limit Under Overload	Approx. ±22mA
Open-Circuit Voltage	<16V
External Resistance	R_{ext}max (kΩ) = 12V/I_{ev} Note: I_{ev} = Output Current End Value
Output Ripple (Voltage or Current)	<0.5% p-p
CMV, Input to Output & Relay	3700Vrms, 1 min.
CMV, Power Supply to Input & Output	3700Vrms, 1 min.
CMV, Power Supply to Relay	2300Vrms, 1 min.
CMV, Output to Relay	2300Vrms, 1 min.
Mains Ripple Suppression	Configurable to 50 or 60Hz
Input Filter	Configurable, see Table 1
Accuracy(1)	±0.1% Span Typ., ±0.2% Span max.
Output Stability	100ppm/°C
Linearization	Configurable; Linear, Custom, $x^{1/2}$, $x^{3/2}$, $x^{5/2}$
Alarm Relay	SPST Isolated Contact
Material	Gold Flashed Silver Alloy
Contact Rating	AC: ≤2A at 250V (500VA), DC:≤2A at 125V (60W)
Mode of Action	Configurable; Alarm and Power Loss (see Table 2 Feature 6)
Trip Point Type	Configurable; Inactive, Low, High (see Table 2 Feature 7)
Trip Point Setting	Configurable, –10 to 110% Input Span (see Table 2 Feature 7)
Trip Point Hysteresis	Configurable, 0 to 100% Input Span (see Table 2 Feature 7)
Energize/De-energize Delay	Configurable, 0.01 to 1000s (see Table 2 Feature 8)
Visible Alarm	Front Panel Green LED flashes "ON"
Power Supply	
Voltage	24 to 60VDC/AC, or 85 to 230VDC/AC; 45 to 400Hz AC
Tolerance	DC –15% to +33%, AC ±15%
Power Consumption	DC ≤1.2W, AC ≤2.5VA
Mechanical Dimensions (h)(w)(d)	2.72" x 0.69" x 4.49" (69.2mm x 17.5mm x 114mm)
Housing Material	Lexan 940, Flammability Class V-0 According to UL 94
Mounting	DIN EN 50022 -35x7.5 or -35x15
Environmental	
Operating Temperature Range	–25°C to +55°C
Storage Temperature Range	–40°C to +70°C
Relative Humidity	0 to 75% Noncondensing
Emissions	EN50081-2 (Radiated, Conducted)
Immunity	EN50082-2 (ESD, RF, EFT)

Ordering Information

Model	Input Range/Description	Output Range
DSCP81-01 (Standard Configuration(2))	User Configurable V or I Input, 24 to 60VDC/AC Power	User Configurable V or I Output
DSCP81-02 (Standard Configuration(2))	User Configurable V or I Input, 85 to 230VDC/AC Power	User Configurable V or I Output

Accessories

Model	Description
DSCX-787	PC Interface Cable
DSCX-587	Module Interface Cable
DSCX-557(3)	Configuration Software

Table 1: Configurable Input Filter Settings

Response Time (63%) [s] 50Hz	60Hz	Response Time(4) (99%) [s] 50Hz	60Hz
0.04	0.03	0.08	0.07
0.06	0.05	0.17	0.14
0.10	0.08	0.36	0.30
0.18	0.15	0.72	0.60
0.34	0.28	1.5	1.2
0.66	0.55	3.0	2.5
1.3	1.1	6.0	5.0
2.6	2.2	12	10
5.1	4.3	24	20
10.3	8.6	48	40
20.5	17	94	80
41	34	190	160
82	68	380	315
160	140	750	630
330	270	1500	1260

NOTES:
*Contact factory or your local Dataforth sales office for maximum values.
(1) Includes linearity and repeatability errors at reference conditions.
(2) Shipped as 4 to 20mA input, 4 to 20mA output, linearization = linear, input filter = 80ms, ripple suppression = 60Hz, alarm function = inactive.
(3) Downloadable from website.
(4) Configuration software allows selection of the (99%) values.

©1995-2017 Dataforth Corporation, All Rights Reserved ISO9001:2008-Registered QMS

Figure 2: Switching Function by Trip Point Type

Alarm Relay Features[1]	
Trip point type:	Configurable as low or high or inactive
Trip point adjustment:	Configurable between –10 and 110%[2]
Hysteresis:	Configurable between >0 and 100%[2]
Energize/De-energize delays:	Configurable between 0 and 1000s
Relay contact position:	Configurable
Front panel display:	Green LED "ON" flashes when the limit value is exceeded.

NOTES:
(1) Refer to Table 2 for connections
(2) In relation to the analog input span

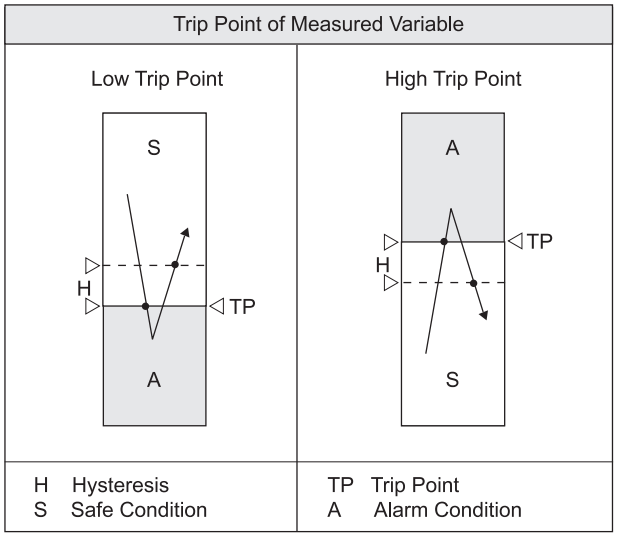

Table 2: Input Range and Associated Connection Diagram

Measuring Mode/Application	DC Voltage			DC Current
Measuring Range Limits	≤ ± 1.7V	> ± 1.7 to ≤ ± 100V	> ± 100 to ± 1000V	≤ ± 100 mA
= Input Signal	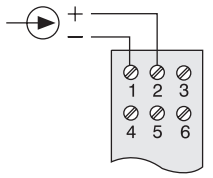	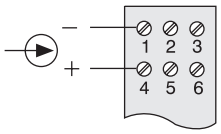	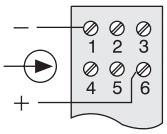	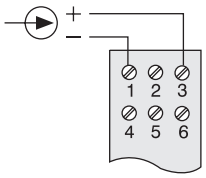
= Output Signal K = Output Contact = Power Supply	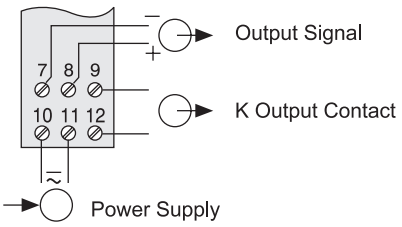			

Figure 3: Configuring the DSCP81

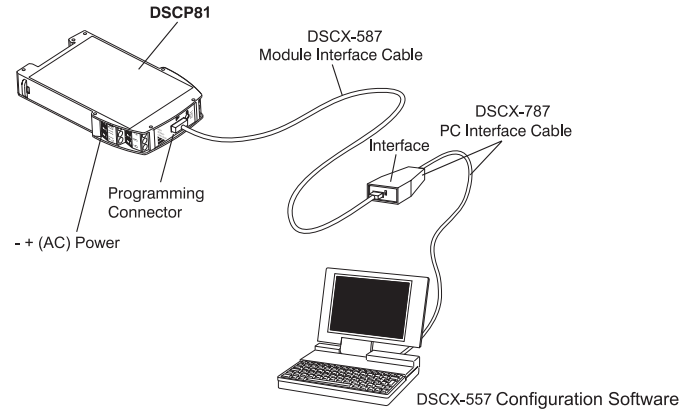

A PC, DSCX-787 PC interface cable, DSCX-587 module interface cable, and DSCX-557 configuration software are required to program the DSCP81. Power must be connected to the DSCP81 for configuration. The DSCX-557 configuration software is downloadable from the website.

IMPORTANT!

1. DO NOT connect the DSCX-587 module interface cable to the DSCP81 programming connector when >253V is applied to the DSCP81 input.

2. The DSCX-587 module interface cable must first be connected to the DSCX-787 cable before it is connected to the DSCP81.

3. The programming connector on the DSCP81 is DC connected to the DSCP81 input circuit. **DO NOT** touch any metal parts of the plug or socket if an input voltage >24V is connected to the DSCP81.

©1995-2017 Dataforth Corporation, All Rights Reserved ISO9001:2008-Registered QMS

Figure 4: Product Dimensions

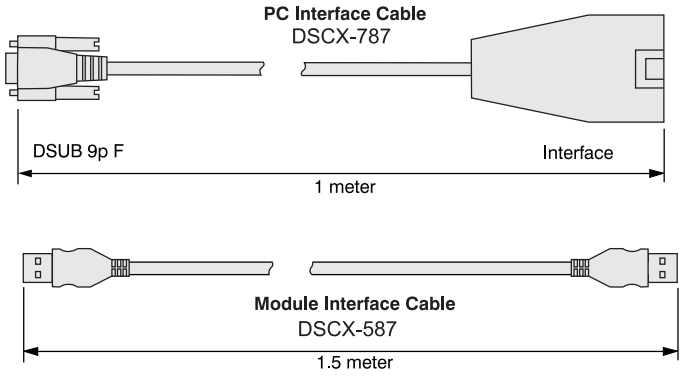

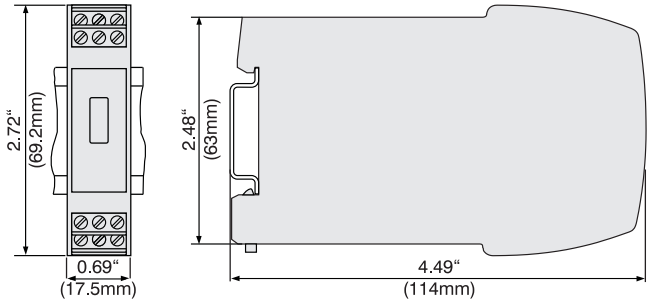

DSCP81 Clipped onto a Top-Hat Rail (35 x 15mm or 35 x 17mm, acc. to EN 50022).

©1995-2017 Dataforth Corporation, All Rights Reserved ISO9001:2008-Registered QMS

DSCT

Isolated DIN Rail Mount 2-Wire Transmitters

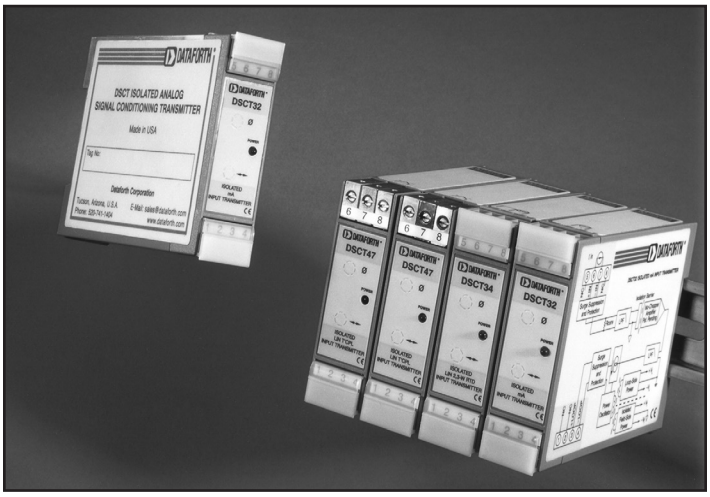

Instrument Class® Performance

"Best of Breed" accuracy, linearity, stability and noise specifications. Outstanding protection and isolation performance for input, output and power connections. Capable of operating on the widest of loop supply power and over the broadest operating temperature range!

Description

Dataforth's DSCT series of loop powered 2-wire transmitters consists of seven family groups with a total of 48 transmitter models that interface to a wide variety of voltage, current, temperature and position measuring devices. As one of Dataforth's **Instrument Class®** products, the DSCT family provides superior specifications such as ±0.03% accuracy, five poles of filtering, 1500Vrms continuous isolation, low output noise, and much more.

The DSCT 2-wire transmitter conditions and sends analog signals from sensors located in the "field" to monitoring and control equipment, usually omputers, located thousands of feet away in central control areas. The DSCT accepts a wide range of inputs, including millivolt, volt, milliamp, thermocouple, RTD, potentiometer, and slide wire. It operates on power from a 2-wire signal loop and modulates the supply current to represent the input signal within a 4 to 20mA range.

Two-wire transmission loops are a very economical method for connecting sensors to distant control rooms. Since the DSCT operates from the signal loop current, no additional, expensive power and wiring are required. Only low cost, twisted pair wiring is needed.

Features

- ±0.03% Accuracy (Typical)
- ±0.01% Linearity
- 1500Vrms Transformer Isolation & 240Vrms Field-side Protection
- ANSI/IEEE C37.90.1 Transient Protection
- Wide Loop Supply Voltage, 10.8V to 60V
- 5-Pole Low-Pass Filtering
- Up to 160dB CMR
- 85dB NMR at 60Hz, 80dB at 50Hz
- Protected Against Reverse Connection of Loop Voltage
- –40°C to +80°C Operating Temperature
- Mounts on DIN Rail EN 50022, 35x7.5 or 35x15
- CSA C/US Certified (Class I, Division 2, Groups A, B, C, D)
- CE Compliant
- Manufactured per RoHS II Directive 2011/65/EU

©1995-2017 Dataforth Corporation, All Rights Reserved ISO9001:2008-Registered QMS

DSCT Selection Guide

ANALOG VOLTAGE INPUT TRANSMITTERS Page 276

MODEL	INPUT RANGE	MODEL	INPUT RANGE
DSCT30-01	±10mV	DSCT31-01	±1V
DSCT30-02	±50mV	DSCT31-02	±5V
DSCT30-03	±100mV	DSCT31-03	±10V
DSCT30-04	0 - 10mV	DSCT31-04	0 - 1V
DSCT30-05	0 - 50mV	DSCT31-05	0 - 5V
DSCT30-06	0 - 100mV	DSCT31-06	0 - 10V
		DSCT31-07	±20V
		DSCT31-08	0 - 20V

ANALOG CURRENT INPUT TRANSMITTERS Page 278

MODEL	INPUT RANGE
DSCT32-01	4 to 20mA
DSCT32-02	0 to 20mA

LINEARIZED 2- OR 3-WIRE RTD INPUT TRANSMITTERS Page 280

MODEL	TYPE**	INPUT RANGE
DSCT34-01	100ΩPt	–100°C to +100°C (–148°F to +212°F)
DSCT34-02	100ΩPt	0°C to +100°C (+32°F to +212°F)
DSCT34-03	100ΩPt	0°C to +200°C (+32°F to +392°F)
DSCT34-04	100ΩPt	0°C to +600°C (+32°F to +1112°F)
DSCT34-05	100ΩPt	0°C to +400°C (+32°F to +752°F)
DSCT34N-01	120ΩNi	0°C to +300°C (+32°F to +572°F)

POTENTIOMETER INPUT TRANSMITTERS Page 282

MODEL	INPUT RANGE
DSCT36-01	0 to 100Ω
DSCT36-02	0 to 500Ω
DSCT36-03	0 to 1kΩ
DSCT36-04	0 to 10kΩ

THERMOCOUPLE INPUT TRANSMITTERS Page 284

MODEL	TYPE‡	INPUT RANGE
DSCT37J-01	J	–100°C to +760°C (–148°F to +1400°F)
DSCT37K-02	K	–100°C to +1350°C (–148°F to +2462°F)
DSCT37T-03	T	–100°C to +400°C (–148°F to +752°F)
DSCT37E-04	E	0°C to +900°C (+32°F to +1652°F)
DSCT37R-05	R	0°C to +1750°C (+32°F to +3182°F)
DSCT37S-06	S	0°C to +1750°C (+32°F to +3182°F)
DSCT37B-07	B	0°C to +1800°C (+32°F to +3272°F)
DSCT37N-08	N	–100°C to +1300°C (–148°F to +2372°F)

LINEARIZED THERMOCOUPLE INPUT TRANSMITTERS Page 286

MODEL	TYPE‡	INPUT RANGE
DSCT47J-01	J	0°C to +760°C (+32°F to +1400°F)
DSCT47J-02	J	–100°C to +300°C (–148°F to +572°F)
DSCT47J-03	J	0°C to +500°C (+32°F to +932°F)
DSCT47K-04	K	0°C to +1000°C (+32°F to +1832°F)
DSCT47K-05	K	0°C to +500°C (+32°F to +932°F)
DSCT47K-13	K	–100°C to +1350°C (–148°F to +2462°F)
DSCT47K-14	K	0°C to +1200°C (+32°F to +2192°F)
DSCT47T-06	T	–100°C to +400°C (–148°F to +752°F)
DSCT47T-07	T	0°C to +200°C (+32°F to +392°F)
DSCT47E-08	E	0°C to +1000°C (+32°F to +1832°F)
DSCT47R-09	R	+500°C to +1750°C (+932°F to +3182°F)
DSCT47S-10	S	+500°C to +1750°C (+932°F to +3182°F)
DSCT47B-11	B	+500°C to +1800°C (+932°F to +3272°F)
DSCT47N-15	N	–100°C to +1300°C (–148°F to +2372°F)

ACCESSORIES Page 289

MODEL	DESCRIPTION
SCMXRAIL1-XX	DIN EN50022-35x7.5 (slotted steel),length -XX meters
SCMXRAIL3-XX	DIN EN50022-35x15 (slotted steel),length -XX meters

POWER SUPPLIES Page 232

PWR-PS5R7W	Power Supply, 24V, 0.3A, 100-240VAC Input
PWR-PS5R15W	Power Supply, 24V, 0.65A, 100-240VAC Input

‡THERMOCOUPLE ALLOY COMBINATIONS

Standards: DIN IEC 584, ANSI MC96-1-82, JIS C 1602-1981

TYPE	MATERIAL
J	Iron vs. Copper-Nickel
K	Nickel-Chromium vs. Nickel-Aluminum
T	Copper vs. Copper-Nickel
E	Nickel-Chromium vs. Copper-Nickel
R	Platinum-13% Rhodium vs. Platinum
S	Platinum-10% Rhodium vs. Platinum
B	Platinum-30% Rhodium vs.Platinum-6%Rhodium
N	Nickel-14.2% Chromium-1.4% Silicon vs. Nickel-4.4% Silicon-0.1% Magnesium

****RTD STANDARDS**

TYPE	ALPHA COEFFICIENT	DIN	JIS
100Ω Pt	0.00385	DIN 43760	JIS C 1604-1989
120Ω Ni	0.00672		

©1995-2017 Dataforth Corporation, All Rights Reserved ISO9001:2008-Registered QMS

DSCT30/31

Analog Voltage Input Transmitters

Description

Each DSCT30 and DSCT31 voltage input transmitter provides a single channel of analog input which is filtered, isolated, amplified, and converted to a process current output (Figure 1). Signal filtering is accomplished with a five-pole filter, which provides 85dB of normal-mode rejection at 60Hz and 80dB at 50Hz. An anti-aliasing pole is located on the field side of the isolation barrier, and the other four are on the process loop side. After the initial field-side filtering, the input signal is chopped by a proprietary chopper circuit. Isolation is provided by transformer coupling, again using a proprietary technique to suppress transmission of common mode spikes or surges.

Special input and output circuits on the DSCT30 and DSCT31 transmitters provide protection against accidental connection of power-line voltages up to 240VAC and against transient events as defined by ANSI/IEEE C37.90.1. Signal and loop power lines are secured to the module using screw terminals, which are in pluggable terminal blocks for ease of system assembly and reconfiguration.

The modules have excellent stability over time and do not require recalibration, however, zero and span settings are adjustable up to ±10% to accommodate situations where fine-tuning is desired. The adjustments are made using potentiometers located under the front panel label and are non-interactive for ease of use.

Features

- Accepts Millivolt and Voltage Level Signals
- Process Current Output
- 1500Vrms Transformer Isolation
- ANSI/IEEE C37.90.1 Transient Protection
- Input and Output Protected to 240VAC Continuous
- Up to 60V Loop Voltage
- 160dB CMR
- 85dB NMR at 60Hz, 80dB at 50Hz
- ±0.03% Accuracy
- ±0.01% Linearity
- Easily Mounts on Standard DIN Rail
- CSA C/US Certified
- CE Compliant

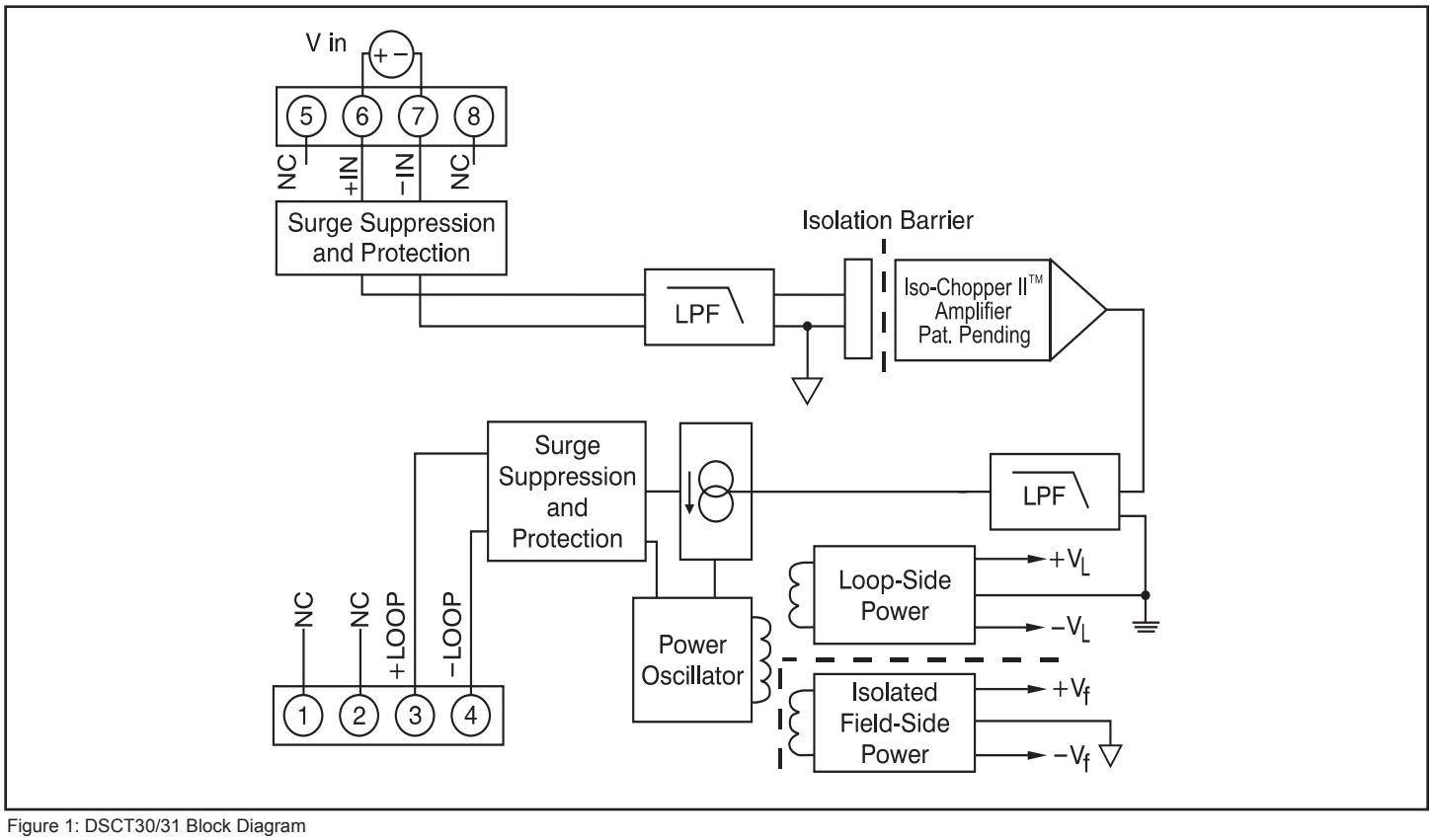

Figure 1: DSCT30/31 Block Diagram

©1995-2017 Dataforth Corporation, All Rights Reserved ISO9001:2008-Registered QMS

Specifications Typical* at T_A = +25°C and +24VDC loop voltage

Module	DSCT30	DSCT31
Input Range	±10mV to ±100mV	±1V to ±20V
Input Bias Current	±0.5nA	±0.05nA
Input Resistance		
Normal	50MΩ	2MΩ
Power Off	66kΩ	2MΩ
Overload	66kΩ	2MΩ
Input Protection		
Continuous	240Vrms max	*
Transient	ANSI/IEEE C37.90.1	*
CMV, Input to Output		
Continuous	1500Vrms max	*
Transient	ANSI/IEEE C37.90.1	*
CMR (50Hz or 60Hz)	160dB	*
NMR	85dB at 60Hz, 80dB at 50Hz	*
Adjustability	±10% Zero and Span	*
Accuracy(1)	±0.03%	*
Conformity	±0.01%	*
Stability		
Offset	±20ppm/°C	*
Gain	±80ppm/°C	*
Noise		
Output, 100kHz	3µArms	*
Bandwidth, –3dB	3Hz	*
Response Time, 90% Span	165ms	*
Output Range	4mA to 20mA	*
Output Limits		
Under-range	2.8mA	*
Over-range	29mA	*
Output Protection		
Reverse Polarity	Continuous	*
Over-voltage	240Vrms continuous	*
Transient	ANSI/IEEE C37.90.1	*
Loop Supply Voltage	10.8V to 60V	*
Loop Supply Sensitivity	±0.0005%/V	*
Turn-On Delay	400ms	*
Mechanical Dimensions (h)(w)(d)	2.95" x 0.89" x 4.13" (75mm x 22.5mm x 105mm)	* *
Mounting	DIN EN 50022 -35x7.5 or -35x15 rail	*
Environmental		
Operating Temperature	–40°C to +80°C	*
Storage Temperature	–40°C to +80°C	*
Relative Humidity	0 to 95% Noncondensing	*
Emissions, EN61000-6-4	ISM, Group 1	
Radiated, Conducted	Class A	
Immunity EN61000-6-2	ISM, Group 1	
RF	Performance A ±0.5% Span Error	
ESD, EFT	Performance B	

NOTES:
*Contact factory or your local Dataforth sales office for maximum values.
* Same specification as DSCT30.
(1) Includes linearity, hysteresis and repeatability.

Ordering Information

Model	Input Range
DSCT30-01	–10mV to +10mV
DSCT30-02	–50mV to +50mV
DSCT30-03	–100mV to +100mV
DSCT30-04	0mV to +10mV
DSCT30-05	0mV to +50mV
DSCT30-06	0mV to +100mV
DSCT31-01	–1V to +1V
DSCT31-02	–5V to +5V
DSCT31-03	–10V to +10V
DSCT31-04	0V to +1V
DSCT31-05	0V to +5V
DSCT31-06	0V to +10V
DSCT31-07	–20V to +20V
DSCT31-08	0V to +20V

©1995-2017 Dataforth Corporation, All Rights Reserved ISO9001:2008-Registered QMS

DSCT32

Analog Current Input Transmitters

Description

Each DSCT32 current input transmitter provides a single channel of analog input which is filtered, isolated, amplified, and converted to a process current output (Figure 1). Signal filtering is accomplished with a five-pole filter, which provides 80dB per decade of normal-mode rejection above 100Hz. An anti-aliasing pole is located on the field side of the isolation barrier, and the other four are on the process loop side. After the initial field-side filtering, the input signal is chopped by a proprietary chopper circuit. Isolation is provided by transformer coupling, again using a proprietary technique to suppress transmission of common mode spikes or surges.

Special input and output circuits on the DSCT32 transmitters provide protection against accidental connection of power-line voltages up to 240VAC and against transient events as defined by ANSI/IEEE C37.90.1. Signal and loop power lines are secured to the module using screw terminals, which are in pluggable terminal blocks for ease of system assembly and reconfiguration.

The modules have excellent stability over time and do not require recalibration, however, zero and span settings are adjustable up to ±10% to accommodate situations where fine-tuning is desired. The adjustments are made using potentiometers located under the front panel label and are non-interactive for ease of use.

Features

- Accepts Milliamp Level Signals
- Process Current Output
- 1500Vrms Transformer Isolation
- ANSI/IEEE C37.90.1 Transient Protection
- Input and Output Protected to 240VAC Continuous
- Up to 60V Loop Voltage
- 105dB CMR
- ±0.03% Accuracy
- ±0.01% Linearity
- Easily Mounts on Standard DIN Rail
- CSA C/US Certified
- CE Compliant

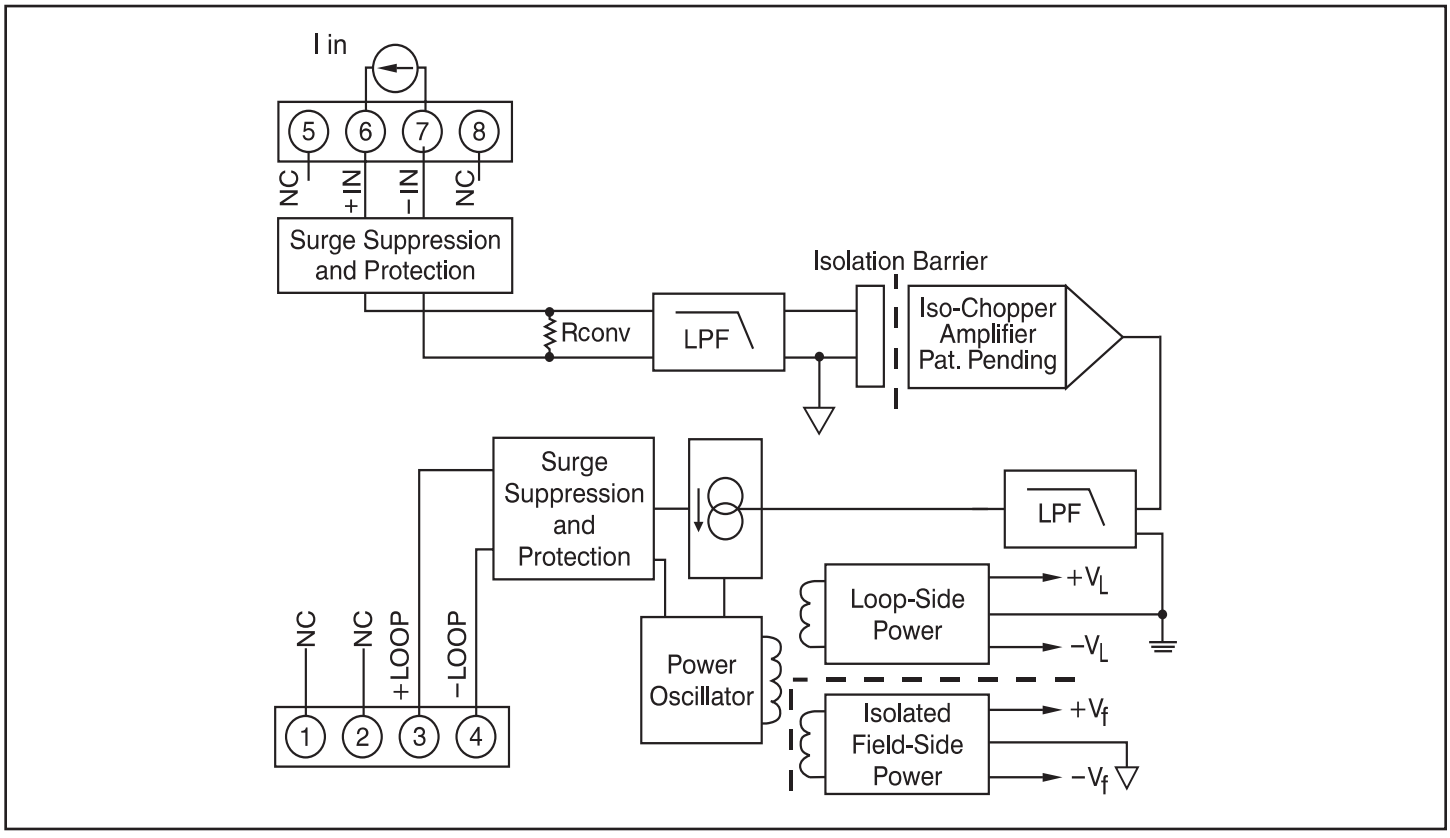

Figure 1: DSCT32 Block Diagram

©1995-2017 Dataforth Corporation, All Rights Reserved ISO9001:2008-Registered QMS

Specifications Typical* at T_A = +25°C and +24VDC loop voltage

Module	DSCT32
Input Range	0-20mA or 4-20mA
Current Conversion Resistor	50.00Ω
Input Protection	
Continuous	240Vrms max
Transient	ANSI/IEEE C37.90.1
CMV, Input to Output	
Continuous	1500Vrms max
Transient	ANSI/IEEE C37.90.1
CMR (50Hz or 60Hz)	105dB
NMR (–3dB at 100Hz)	80dB/decade Above 100Hz
Adjustability	±10% Zero and Span
Accuracy(1)	±0.03%
Conformity	±0.01%
Stability	
Offset	±30ppm/°C
Gain	±90ppm/°C
Noise	
Output, 100kHz	3µArms
Bandwidth, –3dB	100Hz
Response Time, 90% Span	5ms
Output Range	4mA to 20mA
Output Limits	
Under-range	2.8mA
Over-range	29mA
Output Protection	
Reverse Polarity	Continuous
Over-voltage	240Vrms Continuous
Transient	ANSI/IEEE C37.90.1
Loop Supply Voltage	10.8V to 60V
Loop Supply Sensitivity	±0.0005%/V
Turn-On Delay	400ms
Mechanical Dimensions (h)(w)(d)	2.95” x 0.89” x 4.13” (75mm x 22.5mm x 105mm)
Mounting	DIN EN 50022 -35x7.5 or -35x15 rail
Environmental	
Operating Temperature	–40°C to +80°C
Storage Temperature	–40°C to +80°C
Relative Humidity	0 to 95% Noncondensing
Emissions, EN61000-6-4	ISM, Group 1
Radiated, Conducted	Class A
Immunity EN61000-6-2	ISM, Group 1
RF	Performance A ±0.5% Span Error
ESD, EFT	Performance B

NOTES:
*Contact factory or your local Dataforth sales office for maximum values.
(1) Includes linearity, hysteresis and repeatability.

Ordering Information

Model	Input Range
DSCT32-01	4-20mA
DSCT32-02	0-20mA

©1995-2017 Dataforth Corporation, All Rights Reserved ISO9001:2008-Registered QMS

DSCT34

Linearized 2- or 3-Wire RTD Input Transmitters

Description

Each DSCT34 RTD input transmitter provides a single channel of RTD input which is filtered, isolated, amplified, linearized, and converted to a process current output (Figure 1). Signal filtering is accomplished with a five-pole filter, which provides 85dB of normal-mode rejection at 60Hz and 80dB at 50Hz. An anti-aliasing pole is located on the field side of the isolation barrier, and the other four are on the process loop side. After the initial field-side filtering, the input signal is chopped by a proprietary chopper circuit. Isolation is provided by transformer coupling, again using a proprietary technique to suppress transmission of common mode spikes or surges.

RTD excitation is provided from the transmitter using a precision current source. The excitation currents are very small (0.26mA max for 100Ω Pt and 120Ω Ni) which minimizes self-heating of the RTD. Linearization is achieved by creating a non-linear transfer function through the module itself. This non-linear transfer function is configured at the factory and is designed to be equal and opposite to the specific RTD non-linearity. Lead compensation is achieved by matching two current paths thus canceling the effects of lead resistance.

The specifications listed are for a 3-wire connection. A 2-wire connection of the RTD to the module is also possible and is achieved by adding a jumper between pin 5 (+EXC) and pin 6 (+IN) on the terminal block and connecting the RTD leads between pin 6 (+IN) and pin 7 (-IN). The 2-wire connection nullifies the lead resistance compensation feature of the module.

Special input and output circuits on the DSCT34 transmitters provide protection against accidental connection of power-line voltages up to 240VAC and against transient events as defined by ANSI/IEEE C37.90.1. Signal and loop power lines are secured to the module using screw terminals, which are in pluggable terminal blocks for ease of system assembly and reconfiguration.

Features

- Interfaces to 100Ω Platinum or 120Ω Nickel RTDs
- Linearizes RTD Signal
- Process Current Output
- 1500Vrms Transformer Isolation
- ANSI/IEEE C37.90.1 Transient Protection
- Input and Output Protected to 240VAC Continuous
- Up to 60V Loop Voltage
- 160dB CMR
- 85dB NMR at 60Hz, 80dB at 50Hz
- ±0.1% Accuracy
- ±0.025% Conformity
- Easily Mounts on Standard DIN Rail
- CSA C/US Certified
- CE Compliant

The modules have excellent stability over time and do not require recalibration, however, zero and span settings are adjustable up to ±3% to accommodate situations where fine-tuning is desired. The adjustments are made using potentiometers located under the front panel label and are non-interactive for ease of use.

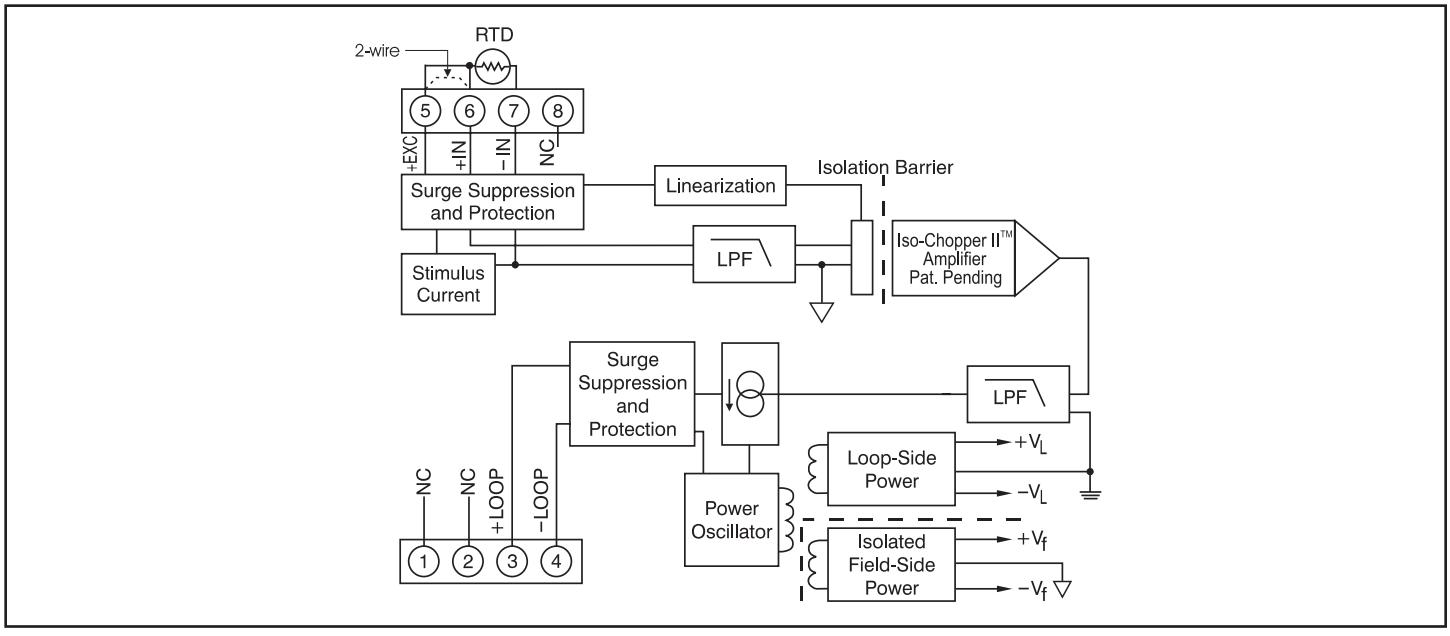

Figure 1: DSCT34 Block Diagram

©1995-2017 Dataforth Corporation, All Rights Reserved ISO9001:2008-Registered QMS

Specifications

Typical* at T_A = +25°C and +24VDC loop voltage

Module	DSCT34
Input Range	–200°C to +850°C (100Ω Pt) –80°C to +320°C (120Ω Ni)
Input Resistance	
Normal	50MΩ
Power Off	66kΩ
Overload	66kΩ
Input Protection	
Continuous	240Vrms max
Transient	ANSI/IEEE C37.90.1
CMV, Input to Output	
Continuous	1500Vrms max
Transient	ANSI/IEEE C37.90.1
CMR (50Hz or 60Hz)	160dB
NMR	85dB at 60Hz, 80dB at 50Hz
Adjustability	±3% Zero and Span
Accuracy	See Ordering Information
Conformity	±0.025%
Stability	
Offset	±50ppm/°C
Gain	±100ppm/°C
Sensor Excitation Current	0.260mA
Lead Resistance Effect	±0.02°C/Ω
Noise	
Output, 100kHz	3µArms
Bandwidth, –3dB	3Hz
Response Time, 90% Span	165ms
Output Range	4mA to 20mA
Output Limits	
Under-range	3mA
Over-range	29mA
Output Protection	
Reverse Polarity	Continuous
Over-voltage	240Vrms Continuous
Transient	ANSI/IEEE C37.90.1
Loop Supply Voltage	10.8V to 60V
Loop Supply Sensitivity	±0.0005%/V
Turn-On Delay	400ms
Mechanical Dimensions (h)(w)(d)	2.95" x 0.89" x 4.13" (75mm x 22.5mm x 105mm)
Mounting	DIN EN 50022 -35x7.5 or -35x15 rail
Environmental	
Operating Temperature	–40°C to +80°C
Storage Temperature	–40°C to +80°C
Relative Humidity	0 to 95% Noncondensing
Emissions, EN61000-6-4	ISM, Group 1
Radiated, Conducted	Class A
Immunity EN61000-6-2	ISM, Group 1
RF	Performance A ±0.5% Span Error
ESD, EFT	Performance B

NOTES:
*Contact factory or your local Dataforth sales office for maximum values.
(1) Includes conformity, hysteresis and repeatability.

Ordering Information

Model	Input Range	Accuracy(1)	
100Ω Pt **			
DSCT34-01	–100°C to +100°C (–148°F to +212°F)	±0.1%	±0.2°C
DSCT34-02	0°C to +100°C (+32°F to +212°F)	±0.1%	±0.1°C
DSCT34-03	0°C to +200°C (+32°F to +392°F)	±0.1%	±0.2°C
DSCT34-04	0°C to +600°C (+32°F to +1112°F)	±0.1%	±0.6°C
DSCT34-05	0°C to +400°C (+32°F to +752°F)	±0.1%	±0.4°C
120Ω Ni **			
DSCT34N-01	0°C to +300°C (+32°F to +572°F)	±0.1%	±0.3°C

**RTD Standards

Type	Alpha Coefficient	DIN	JIS	IEC
100Ω Pt 120Ω Ni	0.00385 0.00672	DIN 43760	JIS C 1604-1989	IEC 751

©1995-2017 Dataforth Corporation, All Rights Reserved ISO9001:2008-Registered QMS

DSCT36

Potentiometer Input Transmitters

Description

Each DSCT36 potentiometer input transmitter provides a single channel of potentiometer input which is filtered, isolated, amplified, and converted to a process current output (Figure 1). Signal filtering is accomplished with a five-pole filter, which provides 85dB of normal-mode rejection at 60Hz and 80dB at 50Hz. An anti-aliasing pole is located on the field side of the isolation barrier, and the other four are on the process loop side. After the initial field-side filtering, the input signal is chopped by a proprietary chopper circuit. Isolation is provided by transformer coupling, again using a proprietary technique to suppress transmission of common mode spikes or surges.

Potentiometer excitation is provided from the transmitter using a precision current source. The excitation current is small (less than 0.26mA) which minimizes self-heating of the potentiometer. Lead compensation is achieved by matching two current paths which cancels the effects of lead resistance.

Special input and output circuits on the DSCT36 transmitters provide protection against accidental connection of power-line voltages up to 240VAC and against transient events as defined by ANSI/IEEE C37.90.1. Signal and loop power lines are secured to the module using screw terminals, which are in pluggable terminal blocks for ease of system assembly and reconfiguration.

The modules have excellent stability over time and do not require recalibration, however, zero and span settings are adjustable up to ±10% to accommodate situations where fine-tuning is desired. The adjustments are made using potentiometers located under the front panel label and are non-interactive for ease of use.

Features

- Interfaces to Potentiometers up to 10kΩ
- Process Current Output
- 1500Vrms Transformer Isolation
- ANSI/IEEE C37.90.1 Transient Protection
- Input and Output Protected to 240VAC Continuous
- Up to 60V Loop Voltage
- 160dB CMR
- 85dB NMR at 60Hz, 80dB at 50Hz
- ±0.03% Accuracy
- ±0.01% Linearity
- Easily Mounts on Standard DIN Rail
- CSA C/US Certified
- CE Compliant

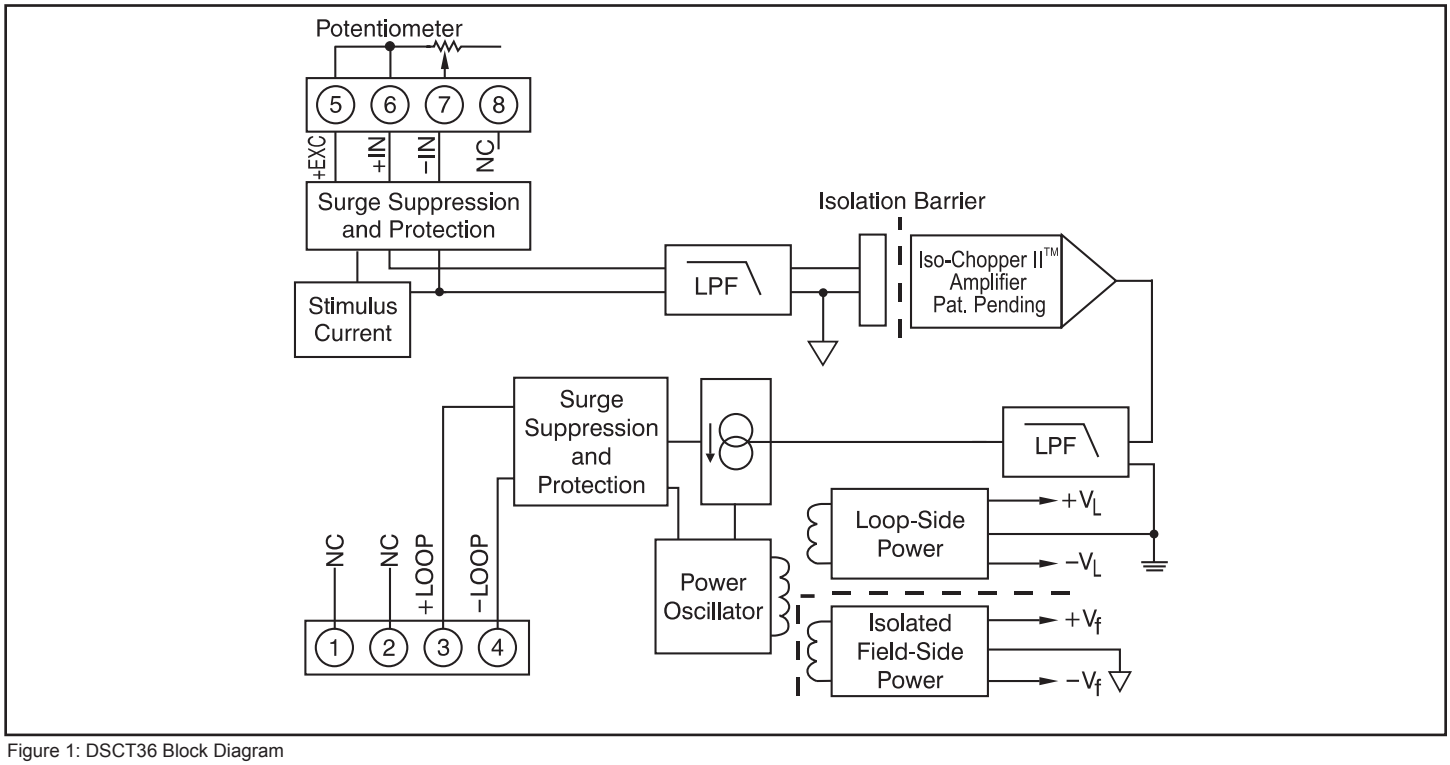

Figure 1: DSCT36 Block Diagram

©1995-2017 Dataforth Corporation, All Rights Reserved ISO9001:2008-Registered QMS

Specifications

Typical* at T_A = +25°C and +24VDC loop voltage

Module	DSCT36
Input Range	0Ω to 10kΩ
Input Resistance	
Normal	50MΩ
Power Off	66kΩ
Overload	66kΩ
Input Protection	
Continuous	240Vrms max
Transient	ANSI/IEEE C37.90.1
CMV, Input to Output	
Continuous	1500Vrms max
Transient	ANSI/IEEE C37.90.1
CMR (50Hz or 60Hz)	160dB
NMR	85dB at 60Hz, 80dB at 50Hz
Adjustability	±10% Zero and Span
Accuracy(1)	±0.03%
Conformity	±0.01%
Stability	
Offset	±50ppm/°C
Gain	±100ppm/°C
Sensor Excitation Current	0.26mA; 100Ω, 500Ω Sensor 0.13mA; 1kΩ Sensor 0.065mA; 10kΩ Sensor
Lead Resistance Effect	±0.01Ω/Ω; 100Ω, 500Ω, 1kΩ Sensor ±0.02Ω/Ω; 10kΩ Sensor
Noise	
Output, 100kHz	3µArms
Bandwidth, –3dB	3Hz
Response Time, 90% Span	165ms
Output Range	4mA to 20mA
Output Limits	
Under-range	3mA
Over-range	29mA
Output Protection	
Reverse Polarity	Continuous
Over-voltage	240Vrms Continuous
Transient	ANSI/IEEE C37.90.1
Loop Supply Voltage	10.8V to 60V
Loop Supply Sensitivity	±0.0005%/V
Turn-On Delay	400ms
Mechanical Dimensions (h)(w)(d)	2.95" x 0.89" x 4.13" (75mm x 22.5mm x 105mm)
Mounting	DIN EN 50022 -35x7.5 or -35x15 rail
Environmental	
Operating Temperature	–40°C to +80°C
Storage Temperature	–40°C to +80°C
Relative Humidity	0 to 95% Noncondensing
Emissions, EN61000-6-4	ISM, Group 1
Radiated, Conducted	Class A
Immunity EN61000-6-2	ISM, Group 1
RF	Performance A ±0.5% Span Error
ESD, EFT	Performance B

NOTES:
*Contact factory or your local Dataforth sales office for maximum values.
(1) Includes linearity, hysteresis and repeatability.

Ordering Information

Model	Input Range
DSCT36-01	0 to 100Ω
DSCT36-02	0 to 500Ω
DSCT36-03	0 to 1kΩ
DSCT36-04	0 to 10kΩ

©1995-2017 Dataforth Corporation, All Rights Reserved ISO9001:2008-Registered QMS

DSCT37

Non-Linearized Thermocouple Input Transmitters

Description

Each DSCT37 non-linearized thermocouple input transmitter provides a single channel of thermocouple input which is filtered, isolated, amplified, and converted to a process current output (Figure 1). Signal filtering is accomplished with a five-pole filter, which provides 85dB of normal-mode rejection at 60Hz and 80dB at 50Hz. An anti-aliasing pole is located on the field side of the isolation barrier, and the other four are on the process loop side. After the initial field-side filtering, the input signal is chopped by a proprietary chopper circuit. Isolation is provided by transformer coupling, again using a proprietary technique to suppress transmission of common mode spikes or surges.

The DSCT37 can interface to eight industry standard thermocouple types: J, K, T, E, R, S, B and N. Each transmitter is cold-junction compensated to correct for parasitic thermocouples formed by the thermocouple wire and screw terminals on the transmitter. Upscale open thermocouple detection is provided by circuitry. Downscale indication can be implemented by installing a 47MΩ, ±20% resistor between screw terminals 6 (+IN) and 8 (-EXC) on the input terminal block.

Special input and output circuits on the DSCT37 transmitters provide protection against accidental connection of power-line voltages up to 240VAC and against transient events as defined by ANSI/IEEE C37.90.1. Loop power lines are secured to the module using screw terminals, which are in pluggable terminal blocks for ease of system assembly and reconfiguration. Transmitter zero and span settings are adjustable up to ±10%. The adjustments are made using potentiometers located under the front panel label and are non-interactive for ease of use.

Features

- Interfaces to Types J, K, T, E, R, S, B, and N Thermocouples
- Process Current Output
- 1500Vrms Transformer Isolation
- ANSI/IEEE C37.90.1 Transient Protection
- Input and Output Protected to 240VAC Continuous
- Up to 60V Loop Voltage
- 160dB CMR
- 85dB NMR at 60Hz, 80dB at 50Hz
- ±0.05% Accuracy
- ±0.01% Linearity
- Easily Mounts on Standard DIN Rail
- CSA C/US Certified
- CE Compliant

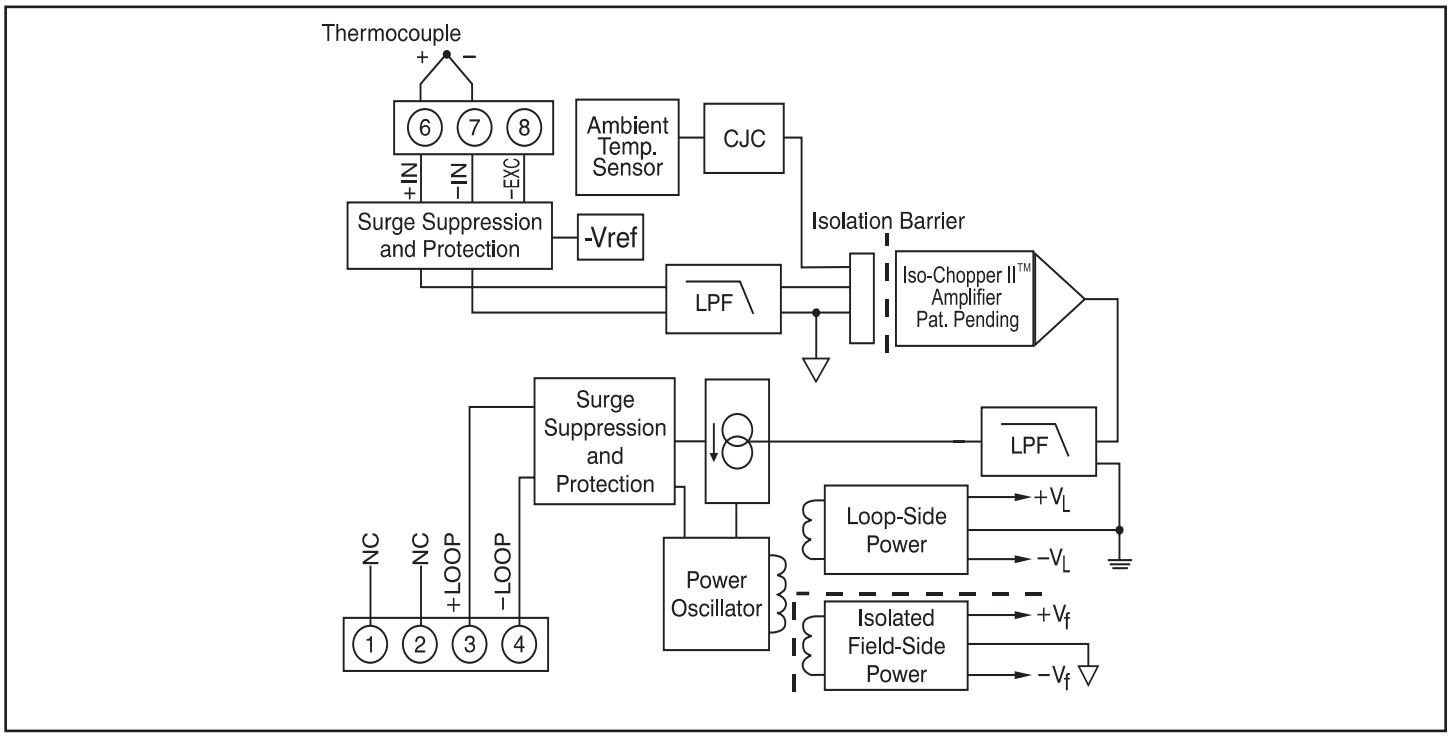

Figure 1: DSCT37 Block Diagram

©1995-2017 Dataforth Corporation, All Rights Reserved ISO9001:2008-Registered QMS

Specifications

Typical* at T_A = +25°C and +24VDC loop voltage

Module	DSCT37
Input Range	Standard thermocouple temperature limits as per NIST monograph 175, ITS-90
Input Bias Current	–25nA
Input Resistance	
Normal	50MΩ
Power Off	66kΩ
Overload	66kΩ
Input Protection	
Continuous	240Vrms max
Transient	ANSI/IEEE C37.90.1
CMV, Input to Output	
Continuous	1500Vrms max
Transient	ANSI/IEEE C37.90.1
CMR (50Hz or 60Hz)	160dB
NMR	85dB at 60Hz, 80dB at 50Hz
Adjustability	±10% Zero and Span
Accuracy	See Ordering Information
Stability	
Offset	±40ppm/°C
Gain	±60ppm/°C
Cold Junction Compensation	
Accuracy, +25°C	±0.25°C
Accuracy, 0°C to +50°C	±0.50°C
Accuracy, –40°C to +80°C	±1.25°C
Open Input Response	Upscale
Open Input Detection Time	<5s
Noise	
Output, 100kHz	3µArms
Bandwidth, –3dB	3Hz
Response Time, 90% Span	165ms
Output Range	4mA to 20mA
Output Limits	
Under-range	2.8mA
Over-range	29mA
Output Protection	
Reverse Polarity	Continuous
Over-voltage	240Vrms Continuous
Transient	ANSI/IEEE C37.90.1
Loop Supply Voltage	10.8V to 60V
Loop Supply Sensitivity	±0.0005%/V
Turn-On Delay	400ms
Mechanical Dimensions (h)(w)(d)	2.95" x 0.89" x 4.13" (75mm x 22.5mm x 105mm)
Mounting	DIN EN 50022 -35x7.5 or -35x15 rail
Environmental	
Operating Temperature	–40°C to +80°C
Storage Temperature	–40°C to +80°C
Relative Humidity	0 to 95% Noncondensing
Emissions, EN61000-6-4	ISM, Group 1
Radiated, Conducted	Class A
Immunity EN61000-6-2	ISM, Group 1
RF	Performance A ±0.5% Span Error
ESD, EFT	Performance B

NOTES :
*Contact factory or your local Dataforth sales office for maximum values.
(1) Includes conformity, hysteresis, repeatability and CJC error.

Ordering Information

Model	TC Type‡	Input Range	Accuracy(1)	
DSCT37J-01	J	–100°C to +760°C (–148°F to +1400°F)	±0.05%	±0.43°C
DSCT37K-02	K	–100°C to +1350°C (–148°F to +2462°F)	±0.05%	±0.73°C
DSCT37T-03	T	–100°C to +400°C (–148°F to +752°F)	±0.05%	±0.25°C
DSCT37E-04	E	0°C to +900°C (+32°F to +1652°F)	±0.05%	±0.45°C
DSCT37R-05	R	0°C to +1750°C (+32°F to +3182°F)	±0.05%	±0.88°C
DSCT37S-06	S	0°C to +1750°C (+32°F to +3182°F)	±0.05%	±0.88°C
DSCT37B-07	B	0°C to +1800°C (+32°F to +3272°F)	±0.05%	±0.90°C
DSCT37N-08	N	–100°C to +1300°C (–148°F to +2372°F)	±0.05%	±0.70°C

‡Thermocouple Alloy Combinations

Standards: DIN IEC 584, ANSI MC96-1-82, JIS C 1602-1981

Type	Material
J	Iron vs. Copper-Nickel
K	Nickel-Chromium vs. Nickel-Aluminum
T	Copper vs. Copper-Nickel
E	Nickel-Chromium vs. Copper-Nickel
R	Platinum-13% Rhodium vs. Platinum
S	Platinum-10% Rhodium vs. Platinum
B	Platinum-30% Rhodium vs. Platinum-6% Rhodium
N	Nickel-14.2% Chromium-1.4% Silicon vs. Nickel-4.4% Silicon- 0.1% Magnesium

©1995-2017 Dataforth Corporation, All Rights Reserved ISO9001:2008-Registered QMS

DSCT47

Linearized Thermocouple Input Transmitters

Description

Each DSCT47 thermocouple input transmitter provides a single channel of thermocouple input which is filtered, isolated, amplified, linearized, and converted to a process current output (Figure 1). Signal filtering is accomplished with a five-pole filter, which provides 85dB of normal-mode rejection at 60Hz and 80dB at 50Hz. An anti-aliasing pole is located on the field side of the isolation barrier, and the other four are on the process loop side. After the initial field-side filtering, the input signal is chopped by a proprietary chopper circuit. Isolation is provided by transformer coupling, again using a proprietary technique to suppress transmission of common mode spikes or surges.

Linearization is achieved by creating a non-linear transfer function through the module itself. This non-linear transfer function is configured at the factory and is designed to be equal and opposite to the thermocouple non-linearity.

The DSCT47 can interface to eight industry standard thermocouple types: J, K, T, E, R, S, B and N. Each transmitter is cold-junction compensated to correct for parasitic thermocouples formed by the thermocouple wire and screw terminals on the transmitter. Upscale open thermocouple detection is provided by circuitry. Downscale indication can be implemented by installing a 47MΩ, ±20% resistor between screw terminals 6 (+IN) and 8 (-EXC) on the input terminal block.

Special input and output circuits on the DSCT47 transmitters provide protection against accidental connection of power-line voltages up to 240VAC and against transient events as defined by ANSI/IEEE C37.90.1. Loop power lines are secured to the module using screw terminals, which are in pluggable terminal blocks for ease of system assembly and reconfiguration. Transmitter zero and span settings are adjustable up to ±3%.

Features

- Interfaces to Types J, K, T, E, R, S, B, and N Thermocouples
- Linearizes Thermocouple Signal
- Process Current Output
- 1500Vrms Transformer Isolation
- ANSI/IEEE C37.90.1 Transient Protection
- Input and Output Protected to 240VAC Continuous
- Up to 60V Loop Voltage
- 160dB CMR
- 85dB NMR at 60Hz, 80dB at 50Hz
- ±0.10% Accuracy
- Easily Mounts on Standard DIN Rail
- CSA C/US Certified
- CE Compliant

The adjustments are made using potentiometers located under the front panel label and are non-interactive for ease of use.

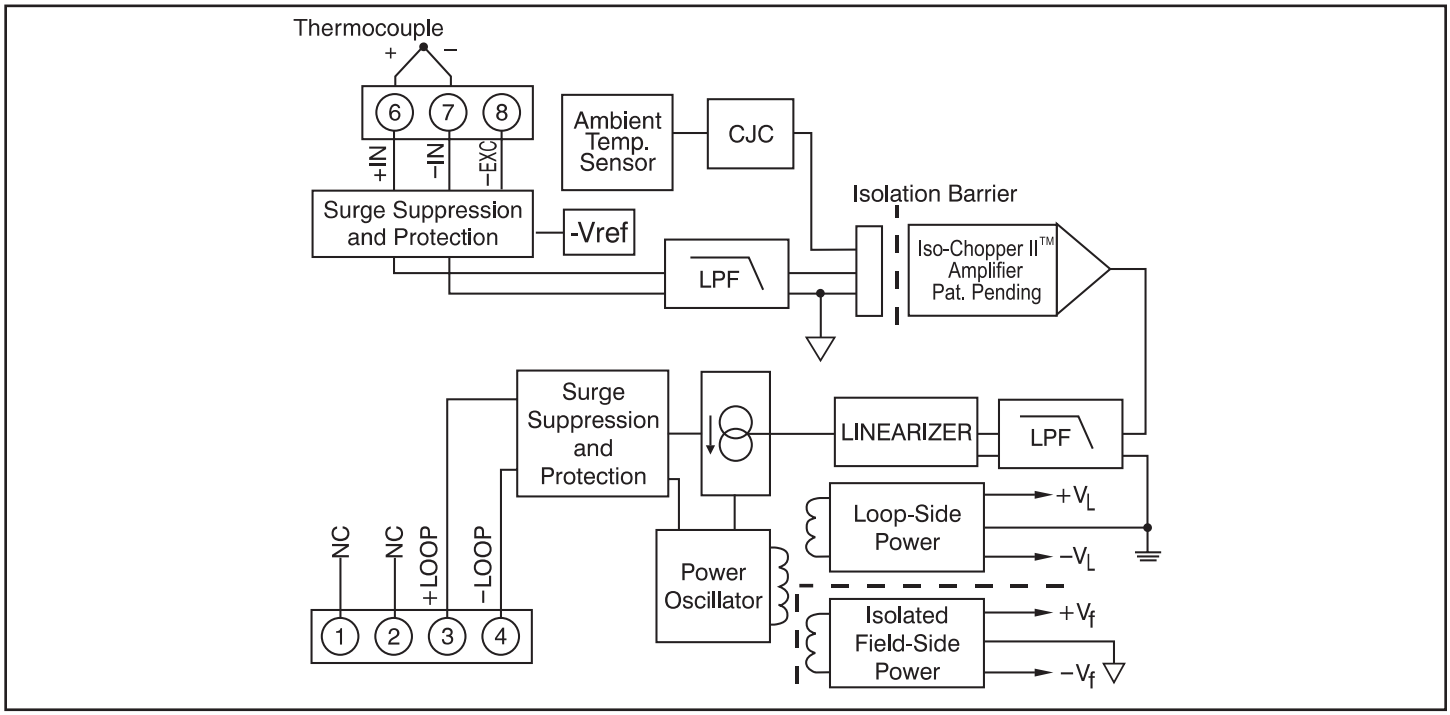

Figure 1: DSCT47 Block Diagram

©1995-2017 Dataforth Corporation, All Rights Reserved ISO9001:2008-Registered QMS

Specifications

Typical* at T_A = +25°C and +24VDC loop voltage

Module	DSCT47
Input Range	Standard thermocouple temperature limits as per NIST monograph 175, ITS-90
Input Bias Current	–25nA
Input Resistance	
Normal	50MΩ
Power Off	66kΩ
Overload	66kΩ
Input Protection	
Continuous	240Vrms max
Transient	ANSI/IEEE C37.90.1
CMV, Input to Output	
Continuous	1500Vrms max
Transient	ANSI/IEEE C37.90.1
CMR (50Hz or 60Hz)	160dB
NMR	85dB at 60Hz, 80dB at 50Hz
Adjustability	±3% Zero and Span
Accuracy	See Ordering Information
Stability	
Offset	±60ppm/°C
Gain	±80ppm/°C
Cold Junction Compensation	
Accuracy, +25°C	±0.25°C
Accuracy, 0°C to +50°C	±0.50°C
Accuracy, –40°C to +80°C	±1.25°C
Open Input Response	Upscale
Open Input Detection Time	<5s
Noise	
Output, 100kHz	3µArms
Bandwidth, –3dB	3Hz
Response Time, 90% Span	165ms
Output Range	4mA to 20mA
Output Limits	
Under-range	2.8mA
Over-range	29mA
Output Protection	
Reverse Polarity	Continuous
Over-voltage	240Vrms Continuous
Transient	ANSI/IEEE C37.90.1
Loop Supply Voltage	10.8V to 60V
Loop Supply Sensitivity	±0.0005%/V
Turn-On Delay	400ms
Mechanical Dimensions (h)(w)(d)	2.95" x 0.89" x 4.13" (75mm x 22.5mm x 105mm)
Mounting	DIN EN 50022 -35x7.5 or -35x15 rail
Environmental	
Operating Temperature	–40°C to +80°C
Storage Temperature	–40°C to +80°C
Relative Humidity	0 to 95% Noncondensing
Emissions, EN61000-6-4	ISM, Group 1
Radiated, Conducted	Class A
Immunity EN61000-6-2	ISM, Group 1
RF	Performance A ±0.5% Span Error
ESD, EFT	Performance B

NOTES :
*Contact factory or your local Dataforth sales office for maximum values.
(1) Includes conformity, hysteresis, repeatability and CJC error.

Ordering Information

Model	TC Type‡	Input Range	Accuracy(1)	
DSCT47J-01	J	0°C to +760°C (+32°F to +1400°F)	±0.1% span	±0.76°C
DSCT47J-02	J	–100°C to +300°C (–148°F to +572°F)	±0.1% span	±0.40°C
DSCT47J-03	J	0°C to +500°C (+32°F to +932°F)	±0.1% span	±0.50°C
DSCT47K-04	K	0°C to +1000°C (+32°F to +1832°F)	±0.1% span	±1.00°C
DSCT47K-05	K	0°C to +500°C (+32°F to +932°F)	±0.1% span	±0.50°C
DSCT47K-13	K	–100°C to +1350°C (–148°F to +2462°F)	±0.1% span	±1.45°C
DSCT47K-14	K	0°C to +1200°C (32°F to +2192°F)	±0.1% span	±1.20°C
DSCT47T-06	T	–100°C to +400°C (–148°F to +752°F)	±0.1% span	±0.50°C
DSCT47T-07	T	0°C to +200°C (+32°F to +392°F)	±0.1% span	±0.20°C
DSCT47E-08	E	0°C to +1000°C (+32°F to +1832°F)	±0.1% span	±1.00°C
DSCT47R-09	R	+500°C to +1750°C (+932°F to +3182°F)	±0.1% span	±1.25°C
DSCT47S-10	S	+500°C to +1750°C (+932°F to +3182°F)	±0.1% span	±1.25°C
DSCT47B-11	B	+500°C to +1800°C (+932°F to +3272°F)	±0.1% span	±1.30°C
DSCT47N-15	N	–100°C to +1300°C (–148°F to +2372°F)	±0.1% span	±1.40°C

‡Thermocouple Alloy Combinations

Standards: DIN IEC 584, ANSI MC96-1-82, JIS C 1602-1981

Type	Material
J	Iron vs. Copper-Nickel
K	Nickel-Chromium vs. Nickel-Aluminum
T	Copper vs. Copper-Nickel
E	Nickel-Chromium vs. Copper-Nickel
R	Platinum-13% Rhodium vs. Platinum
S	Platinum-10% Rhodium vs. Platinum
B	Platinum-30% Rhodium vs. Platinum-6% Rhodium
N	Nickel-14.2% Chromium-1.4% Silicon vs. Nickel-4.4% Silicon- 0.1% Magnesium

©1995-2017 Dataforth Corporation, All Rights Reserved ISO9001:2008-Registered QMS

DSCT Wiring Diagram

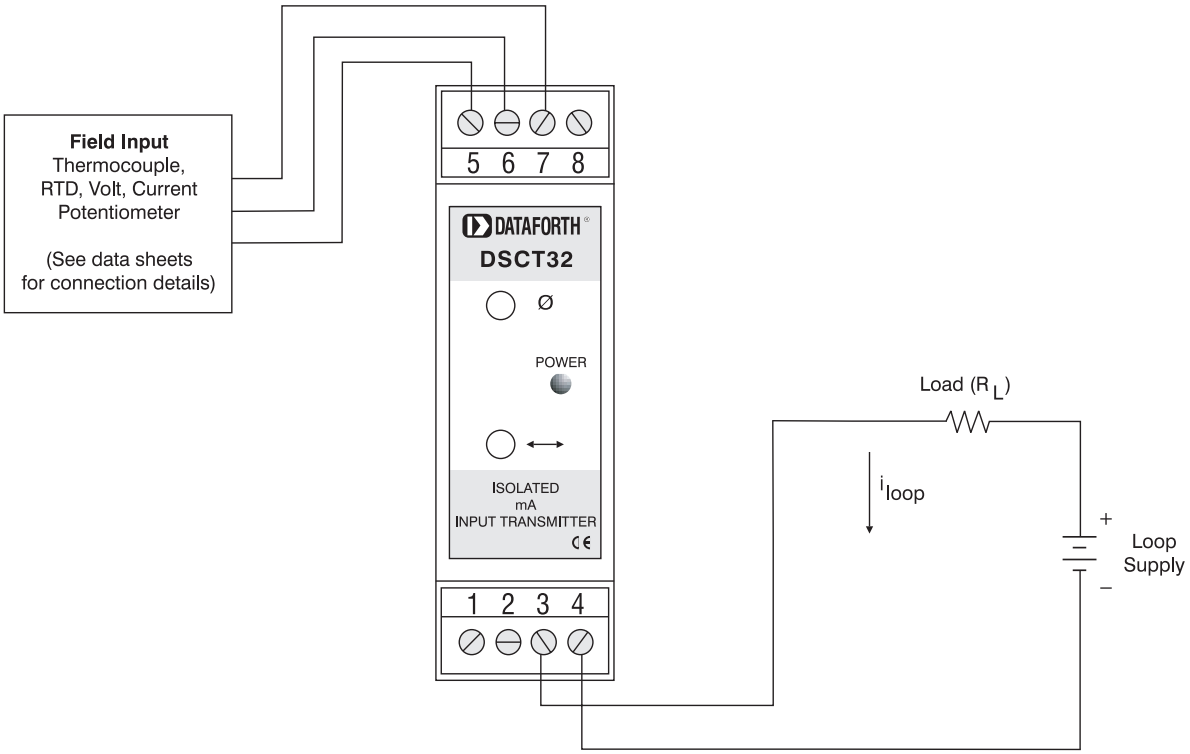

DSCT Loop Drive Capability

The DSCT Transmitter's wide range of Loop Supply Voltage (10.8V to 60V) makes it a versatile device which can be used in most any current loop. The maximum loop resistance is determined by subtracting the transmitter's minimum loop supply voltage from the total loop supply voltage and dividing the result by the maximum loop current (see graph).

The low Loop Supply Voltage of 10.8V allows the DSCT to be used in applications with low output power supplies and the high Loop Supply Voltage of 60V allows use in applications with long distance current loops.

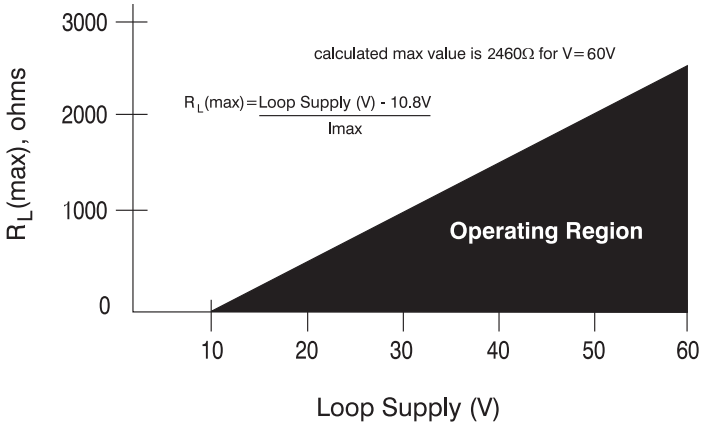

©1995-2017 Dataforth Corporation, All Rights Reserved ISO9001:2008-Registered QMS

DSCT Module Dimensions

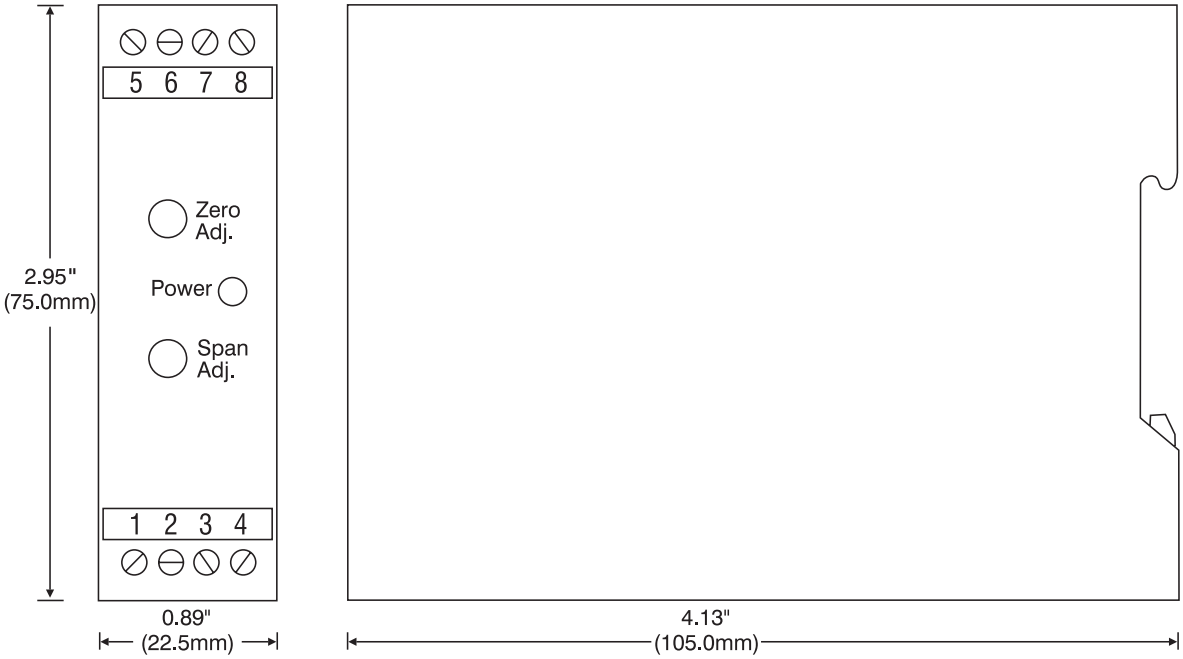

NOTES:

1) Pluggable terminal blocks accept wire sizes AWG 22-12. Strip wire insulation 0.27 in. (7mm) prior to insertion in terminal block.

2) DSCA modules can be mounted to DIN rails shown in Accessories section.

Accessories for DSCT Analog Modules

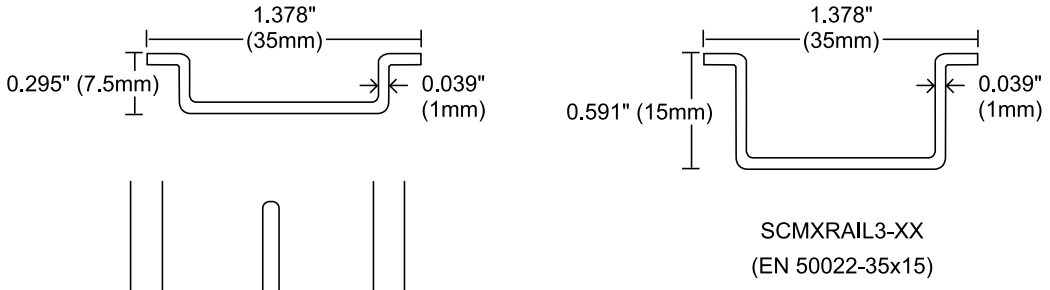

SCMXRAIL3-XX
(EN 50022-35x15)

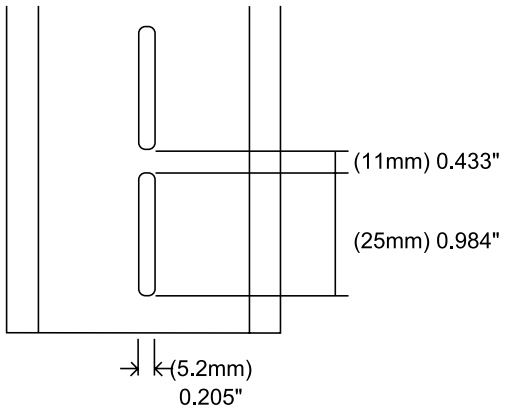

SCMXRAIL1-XX
(EN 50022-35x7.5)

©1995-2017 Dataforth Corporation, All Rights Reserved ISO9001:2008-Registered QMS

Data Communication Products

Protecting Valuable Industrial LANS and Data Communication Systems

Industrial LANs and data communication systems stretch over long distances, inside and outside, with signals exposed to electrical transients, noise, ground loops, power surges, and lightning. Commercial communications equipment often is not designed for use in these environments, which can lead to unreliable signal quality, damage to expensive peripherals, computers, and other online equipment, and production downtime. Our heavy duty products "harden" and protect these systems, and can extend communications for many miles without expensive low-capacitance cabling.

Our LDM Series line drivers and converters protect host computers and equipment and extend the distances over which computers, terminals, and other devices can communicate within hazardous industrial and institutional environments – up to 12 miles using wire pairs and current loop protocols, or two miles with fiber optic data links for total electrical isolation.

Our DCP485 DIN Rail RS-232 to RS-485 converter/line driver provides 1500 Vrms continuous isolation and data transfer up to 115.2kbps with automatic RS-485 line control while powered from +10 to +30VDC.

Features

- 1500Vrms Isolation with Optocouplers and Power DC-to-DC Converter (3000Vp, 1 min)
- Industrial Temperature Range
- DTE/DC Selection Switches, Diagnostic LEDs
- Rugged, Compact Industrial Packaging, Choice of Host Connectors
- Data Rates to 115.2kbps
- Distances to 12 Miles (20km)
- Multidrop, Handshake Functions
- 2- or 4-Wire, Simplex/Duplex Connection
- Full Line of Power and Connector Accessories
- CE Compliant
- Manufactured per RoHS II Directive 2011/65/EU

Applications

- Protects Equipment from Damage due to Power Surges, Transients, Lightning; Breaks Ground Loops
- Extends RS-232 Communication Distances without Expensive Low-Capacitance Cabling
- Connects RS-232 Devices to RS-422 and RS-485 Devices
- Ideal Choice for Industrial and Institutional LANs

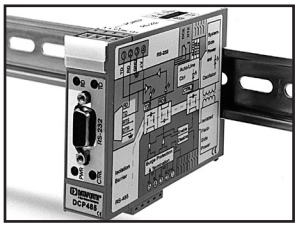

DCP485

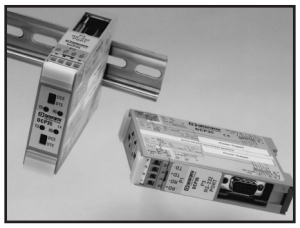

DCP35

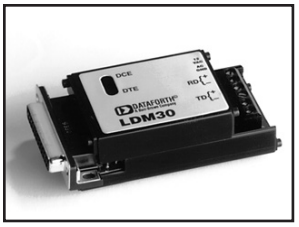

LDM30

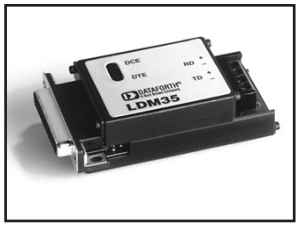

LDM35

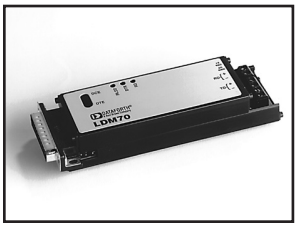

LDM70

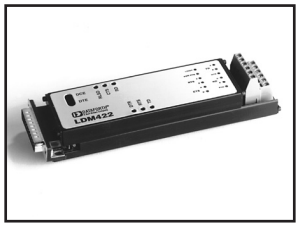

LDM422

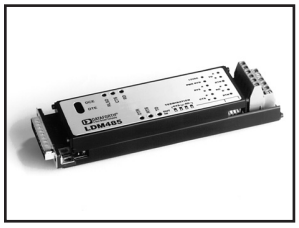

LDM485



LDM80

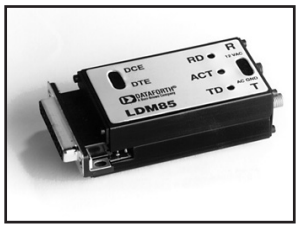

LDM85

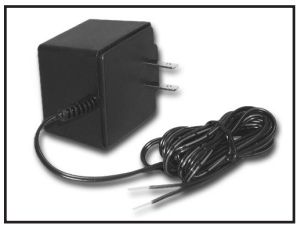

PT3



PT3E

©1995-2017 Dataforth Corporation, All Rights Reserved ISO9001:2008-Registered QMS

Data Communications Selection Guide

Line Drivers and Converters

Model	Max Bit Rate vs Distance	Max Distance vs Bit Rate	Field				Isolation	Host		Power	Notes
			Signal	Mode	#Wires	Connectors		Interface	Connector		
DCP35	19.2k (0.5mi) (0.8km)	12.0 mi (300) 11.3 km	Electrical Current Loop	Simplex, Full-Duplex	2 4	Screw Terminals	Comm[2]	RS-232	Male/ Female DB-9	Port-Signals	Port-Signal Powered
DCP485	115.2k (.8mi) (1.3 km)	7 mi (2.4k) 11.3 km	Electrical RS-485 Differential Voltage	Simplex Half/ Full-Duplex	2 2 4	Screw Terminals	Comm[2]/ Power[3]	RS-232	Fe/Male DB-9/ Screw Terms	Ext.[6]	DIN Rail mounting Auto RS-485 Line control
LDM30	57.6k (.5 mi) (.8 km)	12 mi (1.2k) 19.3 km	Electrical Current Loop	Simplex Full-Duplex	2 4	Screw Terms Mod Phone Jack	Comm[2]	RS-232	Male/ Female DB-25	Ext.[1]	Low Cost
LDM35	19.2k (.5 mi) (.8 km)	12 mi (0.3k) 19.3 km	Electrical Current Loop	Simplex Full-Duplex	2 4	Screw Terms Mod Phone Jack	Comm[2]	RS-232	Male/ Female DB-25	Port Signals	Port-Signal Powered
LDM70	57.6k (.5 mi) (.8 km)	12 mi (1.2k) 19.3 km	Electrical Current Loop	Simplex Full-Duplex	2 4	Screw Terms Mod Phone Jack	Comm[2]/ Power[3]	RS-232	Male/ Female DB-25	Ext.[1]	Full isolation, DTR/RLSD handshake
LDM422	19.2k (1 mi) (1.6 km)	7 mi (1.2k) 11.3 km	Electrical RS-422 Differential Voltage	Simplex Half/ Full-Duplex	2 2 4	Screw Terminals	Comm[2]/ Power[3]	RS-232	Male/ Female DB-25	Ext.[1]	Multidrop capable RTS/CTS handshake or 2nd data channel
LDM485	57.6k (.5 mi) (.8 km)	8 mi (2.4k) 12.9 km	Electrical RS-485 Differential Voltage	Simplex Half/ Full-Duplex	2 2 4	Screw Terminals	Comm[2]/ Power[3]	RS-232	Male/ Female DB-25	Ext.[1]	Multidrop capable RTS/CTS handshake or 2nd data channel
LDM80	19.2k (2.2mi) (3.5 km)	2.2 mi (19.2k) 3.5 km	Optical	Simplex Full-Duplex	1 fiber 2 fibers	SMA (905) ST	Total[4]	RS-232	Male/ Female DB-25	Port Signals	Total electrical isolation, intrinsic safety
LDM85	5M[5] (1.2 mi) (2 km)	1.2 mi (5M) 2 km	Optical	Simplex Full-Duplex	1 fiber 2 fibers	SMA (905) ST	Total[4]	RS-232 RS-422/ RS-423 TTL	Male/ Female DB-25	Ext.[1]	Multipoint optical loop, total electrical isolation

Accessories

Model	Description
Power Supply	DIN Rail Mount, 85-264VAC, 47-63Hz In
PWR-PS5R7W	24VDC, 0.3A Out
PWR-PS5R15W	24VDC, 0.65A Out
PWR-PS5R30W	24VDC, 1.3A Out
PWR-PS5R60W	24VDC, 2.5A Out
PWR-PS5RE120W	24VDC, 5.0A Out

NOTES:
(1) Externally powered LDMs may be powered with wall transformer (supplied) or through pins 9 and 10 on host interface.
(2) Comm isolation provides an optical barrier on receive circuits and/or transmit circuits plus ANSI/IEEE C37.90.1 surge protection.
(3) Power isolation by DC/DC converter to field circuits.
(4) Fiber optic units provide total electrical isolation.
(5) Max data rate for LDM85 is 2.5M bps NRZ TTL and 100K bps RS-232/422.
(6) Externally powered +10V to +30VDC.

©1995-2017 Dataforth Corporation, All Rights Reserved ISO9001:2008-Registered QMS

DCP485

Fully Isolated DIN Rail RS-232 to RS-485 Converters/Line Drivers

Description

The DCP485 is a compact RS-232 to RS-485 converter which features a complete electrical isolation barrier and heavy duty electrical surge protectors. These devices feature a DIN rail mountable enclosure for application to a junction box, a panel, a relay rack, the sides of computer equipment, or anywhere a DIN rail can be mounted. Isolation is provided by optical couplers and a transformer isolated DC-to-DC converter. The RS-232 connection is through male or female EIA 9-pin D-sub connectors, or a 3-wire RS-232connection can be made through convenient pluggable screw terminals. The RS-485 connections are made through convenient pluggable solderless screw terminals.

The DCP485 series is designed for full duplex operation over two wire pairs. Outputs are tri-state, allowing multidropping of up to 32 units over one pair. Data rates are DC to 115.2k bits per second. Four diagnostic LED indicators are provided for installation guidance and system troubleshooting. The RS-232 interface includes Request To Send (RTS) and Data Terminal Ready (DTR) either of which can be used via DIP switches to enable the RS-485 transmitter. Alternately, the DCP485 offers automatic line switching in which the RS-485 transmitter is enabled automatically by each character sent on the RS-232 Transmit Data (TD) line. Additionally, the RS-485 transmitter and receiver may be independently enabled continuously or under RS-232 control. A convenient null modem switch is provided for the data lines. Also, line termination switches independently connect line termination and line bias resistors to the RS-485 lines. The units are powered from wide-range voltages of +10 to +30VDC through pluggable solderless screw terminals.

Features

- Complete Isolation with Optical Couplers and Transformer-Coupled DC-to-DC Converter
- Industrial Surge Protection Devices and 15kV ESD Protected RS-232 Inherent
- Four LED Diagnostic Indicators
- 38.4kbps at 1 Mile (1.6km), 115.2kbps at 0.8 Mile (1.3km)
- RTS, DTR, or Auto RS-485 Transmitter Control
- Tri-state Outputs for Multidrop Applications, up to 32 Devices
- Selection of Connectors
- Wide Operating Temperature Range
- Pluggable Solderless Screw Terminal Field Connections
- CE Compliant

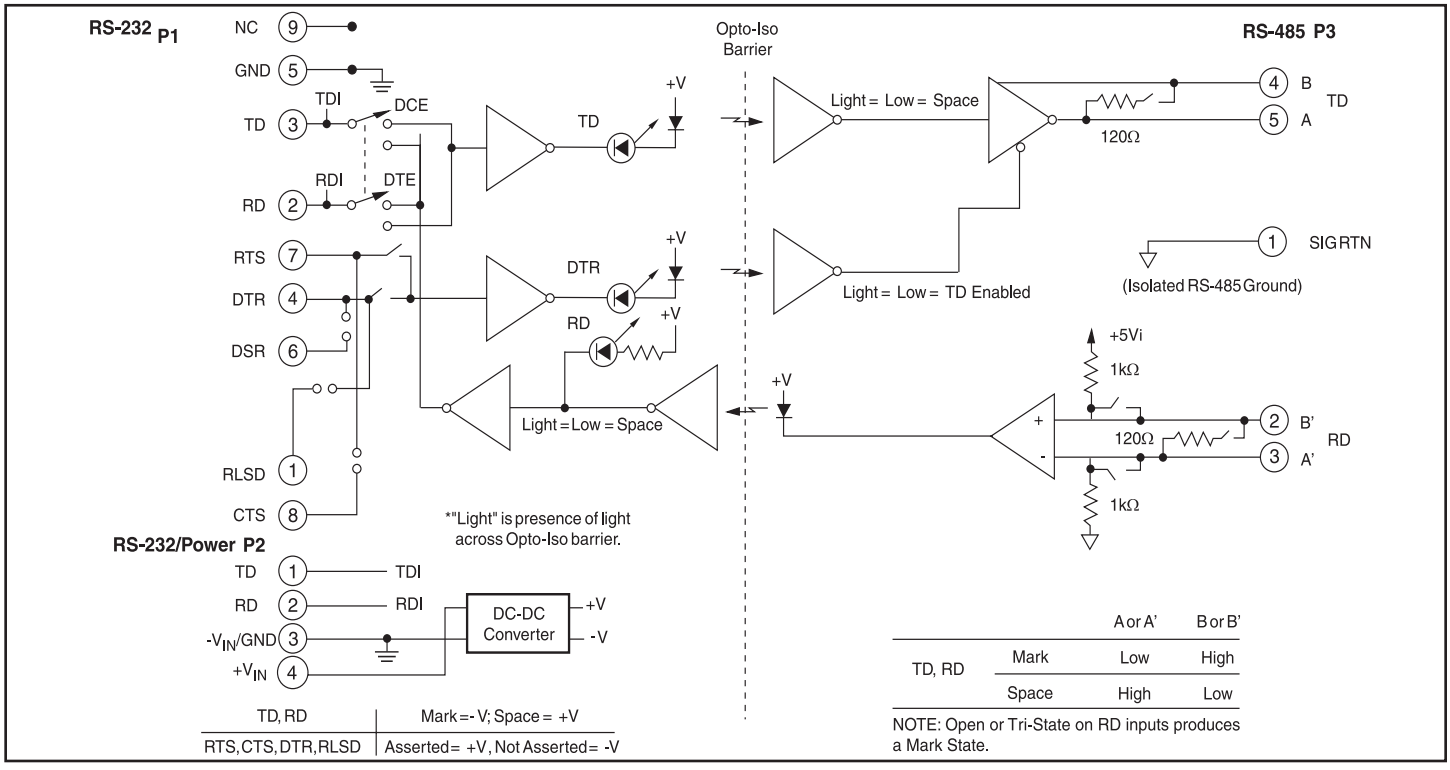

Figure 1: DCP485 Block Diagram

©1995-2017 Dataforth Corporation, All Rights Reserved ISO9001:2008-Registered QMS

Specifications Typical* at T_A = +25°C

Model	DCP485
Bit Rate (bps) bps vs Distance Distance(miles) Distance(km)	0-115.2kbps 115.2k 57.6k 38.4k 19.2k 9.6k 4.8k 2.4k-0 0.8 0.9 1.0 2.0 3.0 4.0 7.0 1.3 1.5 1.6 3.2 4.8 6.4 11.3
Wire Capacitance Max Multidrop Units	Equal to 25pf per foot and up to 32 multidrop units 32
Common Mode Isolation Differential Mode Surge Protection (9 devices)	Surge: 3000Vp, 1 min. Continuous: 1500Vrms (DC input and RS-232 inputs and outputs) ANSI/IEEE C37.90.1 (all RS-485 inputs and outputs)
Modes	Asynchronous 4-wire full-duplex, 2-wire half-duplex, 2-wire simplex
Channel Lines(1) Control Lines(1)	TD, RD RTS, DTR
Null Modem Switch	1 (Reverses RS-232 pins 2 and 3)
RS-485 Output Drive RS-485 Input Impedance	28mA max/output 12kΩ min/input
Power	+10 to +30 VDC at 150mA max
Environmental: Operating Temperature Range Storage Temperature Range Relative Humidity Altitude	 –40°C to +60°C –40°C to +70°C 0 to 95% Noncondensing to 15000 ft (4574 m)
Dimensions	4.3" x 3.3" x 0.89" (109mm x 84mm x 22.5mm)
Weight	4.6 oz (130g)
MTTF(2)	>100,000 hrs

NOTES:
*Contact factory or your local Dataforth sales office for maximum values.
(1) TD = Transmit Data, RD = Receive Data, RTS = Request To Send, DTR = Data Terminal Ready.
(2) Ground-benign environmental conditions (no salt atmosphere, <50°C ambient temperature).

Ordering Information

Model	Description
DCP485-P	Male RS-232 connector
DCP485-S	Female RS-232 connector
Power Supply	DIN Rail Mount
PWR-PS5R7W	85-264VAC, 47-63Hz In 24VDC, 0.3A Out

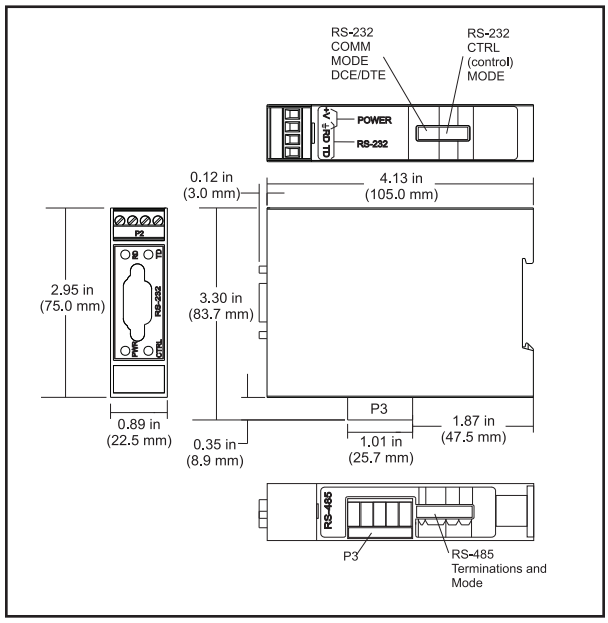

Figure 2: DCP485 Dimensions

RS-232 P1 Pin Descriptions		
Pin 1	RLSD (DCD)	Receive Line Signal Detect (Data Carrier Detect)
Pin 2	RD	Receive Data
Pin 3	TD	Transmit Data
Pin 4	DTR	Data Terminal Ready
Pin 5	SG	Signal Ground
Pin 6	DSR	Data Set Ready
Pin 7	RTS	Request To Send
Pin 8	CTS	Clear To Send
Pin 9	NC	Not Connected

RS-232/POWER P2 Pin Descriptions		
Pin 4	TD	Transmit Data
Pin 3	RD	Read Data
Pin 2	GND	Ground (also Signal Ground)
Pin 1	+V	+10 to +30VDC

RS-485 P3 Pin Descriptions		
Pin 5	TD A	Transmit Data A
Pin 4	TD B	Transmit Data B
Pin 3	RD A'	Receive Data A'
Pin 2	RD B'	Receive Data B'
Pin 1	RTN	Return, Isolated

©1995-2017 Dataforth Corporation, All Rights Reserved ISO9001:2008-Registered QMS

DCP35

DIN Rail Signal-Powered RS-232 Line Drivers

Description

The DCP35 series of products is designed to allow RS-232 devices to be inter-connected over distances sufficient to cover any industrial or institutional complex of buildings. These line drivers feature a DIN rail mountable enclosure for application to a junction box, a panel, a relay rack, the sides of computer equipment, or anywhere a DIN rail can be mounted.

The DCP35 series does not require a power supply for operation. The use of low power circuits and a sensitive optically isolated receiver allows the devices to derive all necessary power from the RS-232 data and control signals. They are designed for full-duplex, asynchronous operation over two, DC-continuous, non-loaded, twisted-wire pairs. Two-wire simplex operation may be accomplished over one twisted-wire pair. The line driver circuits — and, consequently, the host device — are protected from electrical transients due to lightning strikes or operation of heavy industrial equipment.

Each device features a convenient DCE (Data Communication Equipment) to DTE (Data Terminal Equipment) switch which reverses pins 2 and 3 of the RS-232 connector. For installation and system troubleshooting each unit has diagnostic Light Emitting Diodes (LEDs) on the transmit and receive lines.

The RS-232 connector may be ordered as a male or female 9-pin connector. Field connection is made through pluggable solderless screw terminals.

Features

- Signal-powered: No Power Source Required
- Optical Isolation: Breaks Ground Loops
- Heavy Duty Surge Protectors: Prevents Lightning Damage
- LED Diagnostic Indicators: Simplifies Installation and System Troubleshooting
- 19.2kbps to 0.5 Mile (0.8km), 9.6kbps to 2.0 Miles (3.2km), 1.2kbps to 7.0 Miles (11.3km)
- Four-Wire Full Duplex, Two-Wire Simplex
- Pluggable Solderless Screw Terminal Field Connections
- Null Modem Switch
- CE Compliant

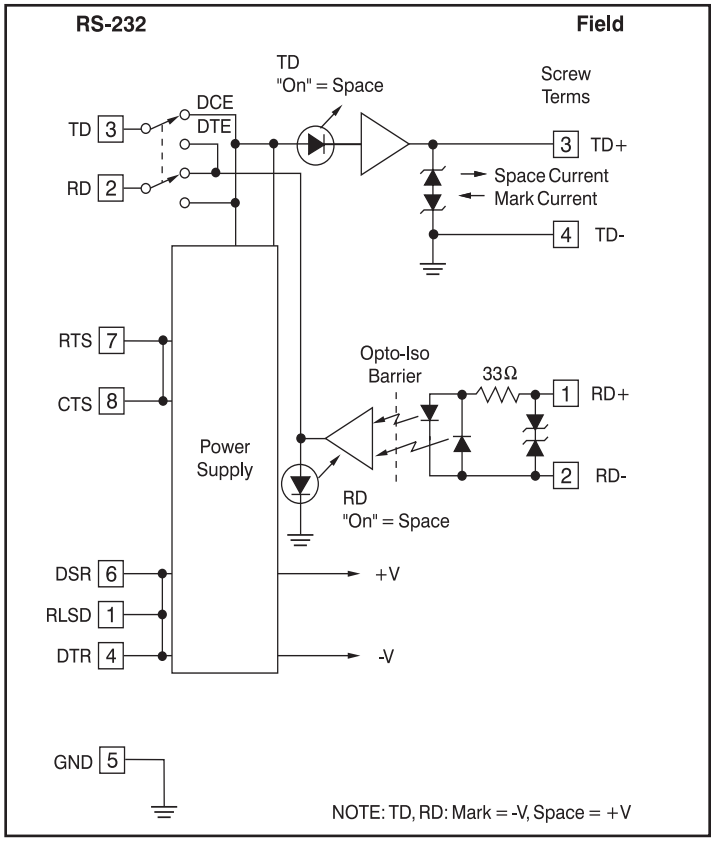

Figure 1: DCP35 Block Diagram

©1995-2017 Dataforth Corporation, All Rights Reserved ISO9001:2008-Registered QMS

Specifications Typical* at T_A = +25°C

Model	DCP35
Bit Rate (bps)	0-19.2kbps
bps vs Distance	19.2k 9.6k 4.8k 2.4k 1.2k-0
Distance (miles)	0.5 2.0 3.0 5.0 7.0
Distance (km)	0.8 3.2 4.8 8.1 11.3
Common Mode Isolation	Surge: 500Vp, 1 min. Continuous: 300Vrms
Differential Mode Surge Protection (3 devices)	ANSI/IEEE C37.90.1
Modes	Asynchronous 4-wire full-duplex, 2-wire simplex
Channel Lines(1)	TD, RD
Control Lines(1)	RTS, CTS, DTR, DSR, RLSD(DCD)
Null Modem Switch	1 (Reverses RS-232 pins 2 and 3)
Power	RS-232 data and control signals
RS-232 Data	±5V to ±15V, 3.0mA to 10.0mA
RS-232 Control Signals	±6V to ±15V, 3.0mA to 10.0mA
Environmental:	
Operating Temperature Range	0°C to +70°C
Storage Temperature Range	–10°C to +85°C
Relative Humidity	0 to 95% Noncondensing
Dimensions	4.2" x 3.3" x 0.89" (107mm x 84mm x 22.5mm)
Weight	4.2 oz (119g)
MTTF(2)	>150,000 hrs

NOTES:
*Contact factory or your local Dataforth sales office for maximum values.
(1) TD = Transmit Data, RD = Receive Data, RTS = Request To Send, CTS = Clear To Send, DTR = Data Terminal Ready, DSR = Data Set Ready, RLSD = Received Line Signal Detect (DCD = Data Carrier Detect).
(2) Ground-benign environmental conditions (no salt atmosphere, <50°C ambient temperature).

Ordering Information

Model	9-Pin Connector	Termination
DCP35-P	1 ch Male	Screw terminals
DCP35-S	1 ch Female	Screw terminals

RS-232 Pin Descriptions				Field Pin Descriptions		
				Screw Terms		
Pin 1	RLSD	[8]	Receive Line Signal Detect	Pin 1	RD+	Receive Data +
Pin 2	RD	[3]	Receive Data	Pin 2	RD-	Receive Data -
Pin 3	TD	[2]	Transmit Data	Pin 3	TD+	Transmit Data +
Pin 4	DTR	[20]	Data Terminal Ready	Pin 4	TD-	Transmit Data -
Pin 5	SG	[7]	Signal Ground			
Pin 6	DSR	[6]	Data Set Ready			
Pin 7	RTS	[4]	Request To Send			
Pin 8	CTS	[5]	Clear To Send			

Pin numbers given are for the 9-pin connector with the 25-pin equivalent in [ ].

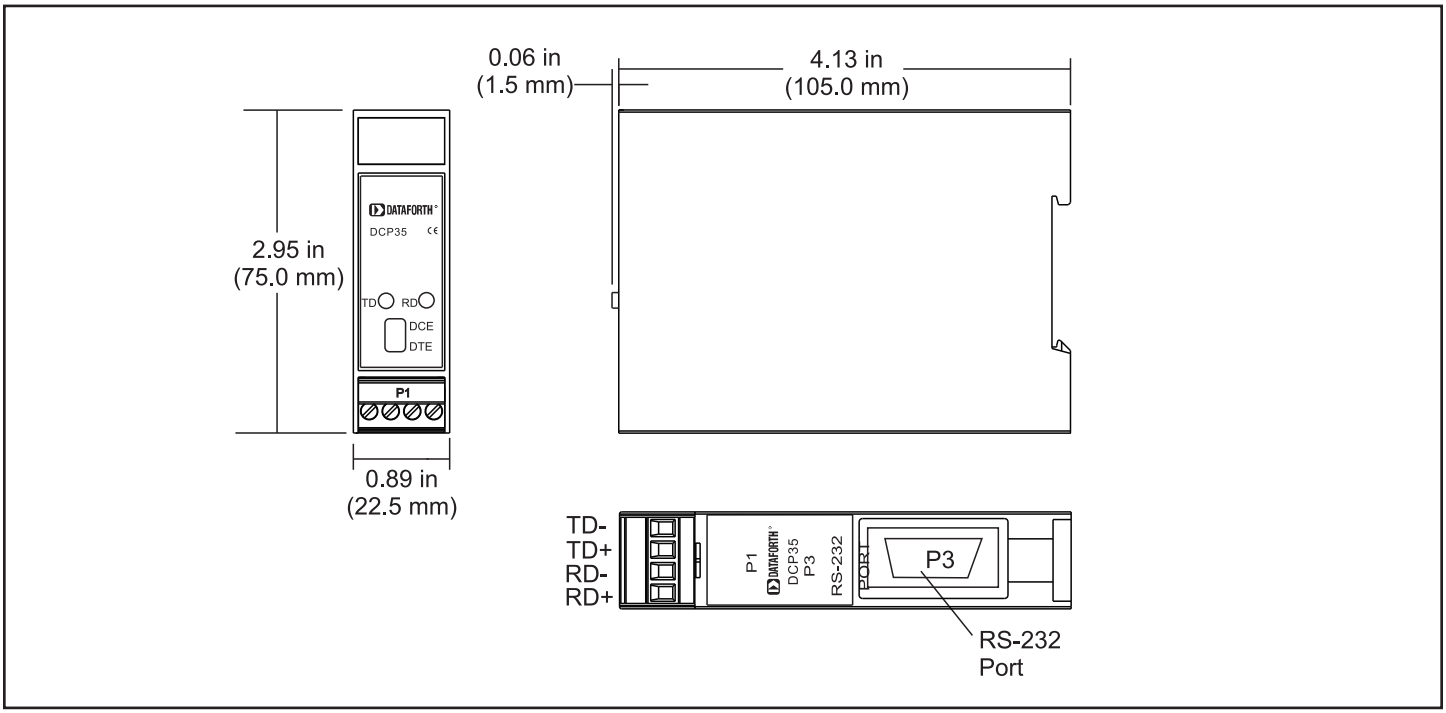

Figure 2: DCP35 Dimensions

©1995-2017 Dataforth Corporation, All Rights Reserved ISO9001:2008-Registered QMS

LDM30

General Purpose RS-232 Line Drivers

Description

The LDM30 series of products is designed to allow video display terminals (VDTs) and other RS-232 devices to be connected over distances sufficient to cover any industrial or institutional complex of buildings. These line drivers feature a rugged aluminum enclosure small enough to mount on the back panel of VDT units, saving valuable desk and floor space.

The LDM30 series is designed for full-duplex, asynchronous operation over two, DC-continuity, non-loaded, twisted-wire pairs. Through special high-speed optically-coupled circuits they may communicate at data rates up to 57,600bps. A self-powered model and a host-powered model are available. The self-powered unit uses 12VAC from a wall-mounted transformer while the host-powered unit takes ±DC power from pins 9 and 10 of the RS-232 connector. The line driver circuits — and, consequently, the host device — are protected from electrical transients due to lightning strikes or operation of heavy industrial equipment.

Each device features a convenient Data-Communication Equipment (DCE) to Data-Terminal Equipment (DTE) switch which reverses pins 2 and 3 of the RS-232 connector. For installation and troubleshooting, each unit has diagnostic Light-Emitting Diodes (LEDs) on the transmit and receive lines.

The RS-232 connector may be ordered as a male or female 25-pin connector. Field connection is made through a modern, solderless, screw-termination assembly.

Features

- DC to 57,600bps
- Optical Isolation
- Surge Protectors
- LED Diagnostic Indicators
- Operation to 3 Miles (5km) at 9600bps, 1 Mile (1.7km) at 19,200bps, 0.5 Miles (0.8km) at 57,600bps
- Four-Wire Full Duplex, Two-Wire Simplex
- Self-Powered or Host-Powered
- Selection of Connectors
- Wide Operating Temperature Range, 0 to +70°C
- CE Compliant

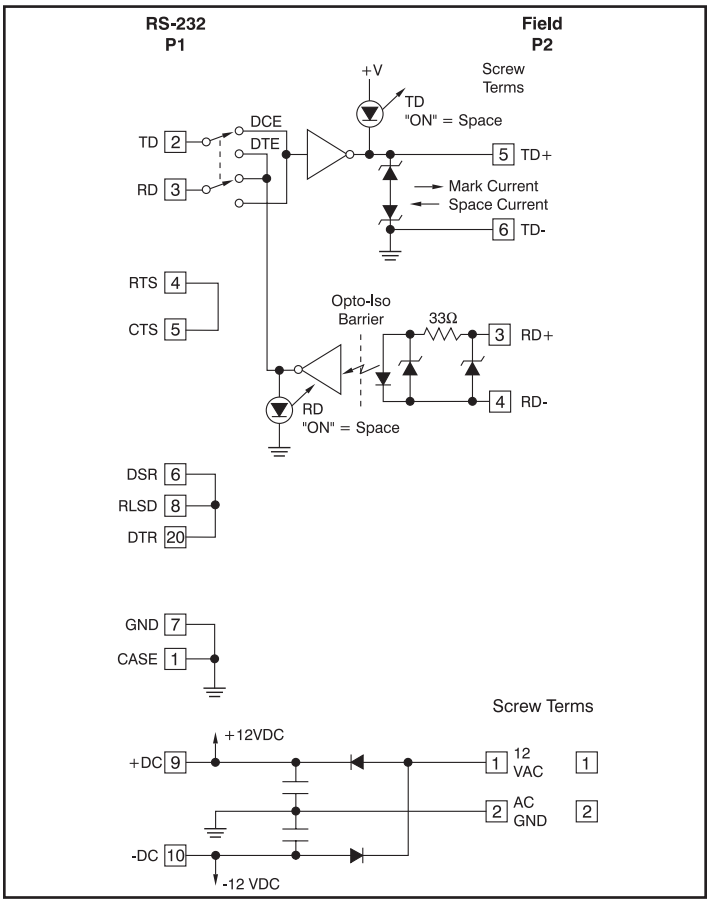

Figure 1: LDM30 Block Diagram

©1995-2017 Dataforth Corporation, All Rights Reserved ISO9001:2008-Registered QMS

Specifications Typical* at T_A = +25°C

Model	LDM30
Bit Rate (bps)	0-57.6k
bps vs Distance	57.6k 38.4k 19.2k 9.6k 4.8k 2.4k 1.2k-0
Distance(miles)	0.5 0.75 1.0 3.0 5.0 7.0 12.0
Distance(km)	0.8 1.21 1.6 4.8 8.1 11.3 19.3
Common Mode Isolation	Surge: 500Vp, 1 min.
	Continuous: 300Vrms
Differential Mode Surge Protection (3 devices)	ANSI/IEEE C37.90.1
Modes	Asynchronous 4-wire full-duplex, 2-wire simplex
Channel Lines(1)	TD, RD
Control Lines(1)	RTS, CTS, DTR, DSR, RLSD
Power	
AC operation(2)	12VAC at 92mA
DC operation	±9VDC to ±15VDC, 35mA
Environmental:	
Operating Temperature Range	0°C to +70°C
Storage Temperature Range	–10°C to +85°C
Relative Humidity	0 to 95% Noncondensing
Dimensions	3.6" x 2.1" x 1"
	(91.4mm x 53.3mm x 25.4mm)
Weight	3.5 oz (100g) max
PT3 and PT3E	11.0 oz (312g) max
MTTF(3)	>150,000 hrs

NOTES:
*Contact factory or your local Dataforth sales office for maximum values.
(1) TD = Transmit Data, RD = Receive Data, RTS = Request To Send, CTS = Clear To Send, DTR = Data Terminal Ready, DSR = Data Set Ready, RLSD = Received Line Signal Detect.
(2) 120VAC and 220VAC power transformers are available.
(3) Ground-benign environmental conditions (no salt atmosphere, <50°C ambient temperature).

Ordering Information

Model	Type	Power	Termination
LDM30-P	Male	Host-powered	Screw termination
LDM30-S	Female	Host-powered	Screw termination
LDM30-PT	Male	U.S. transformer	Screw termination
LDM30-ST	Female	U.S. transformer	Screw termination
LDM30-PE	Male	European transformer	Screw termination
LDM30-SE	Female	European transformer	Screw termination

Model	Description
PT3	U.S. style wall mount transformer, 120VAC
PT3E	Euro style wall mount transformer, 220VAC

RS-232 P1 Pin Descriptions				Field P2 Pin Description
				Screw Terms
Pin 1	CASE		Ground	Pin 1 12VAC
Pin 2	TD	[3]	Transmit Data	Pin 2 AC GND
Pin 3	RD	[2]	Receive Data	Pin 3 RD+
Pin 4	RTS	[7]	Req. To Send	Pin 4 RD-
Pin 5	CTS	[8]	Clear To Send	Pin 5 TD+
Pin 6	DSR	[6]	Data Set Ready	Pin 6 TD-
Pin 7	GND	[5]	Signal Ground	
Pin 8	RLSD	[1]	Receive Line Signal Detect	RD+ = Receive Data +
Pin 9	+DC		Positive DC Supply Input	RD- = Receive Data -
Pin 10	-DC		Negative DC Supply Input	TD+ = Transmit Data +
Pin 20	DTR	[4]	Data Terminal Ready	TD- = Transmit Data -

Pin numbers given are for the 25-pin connector with the 9-pin equivalent in [ ].

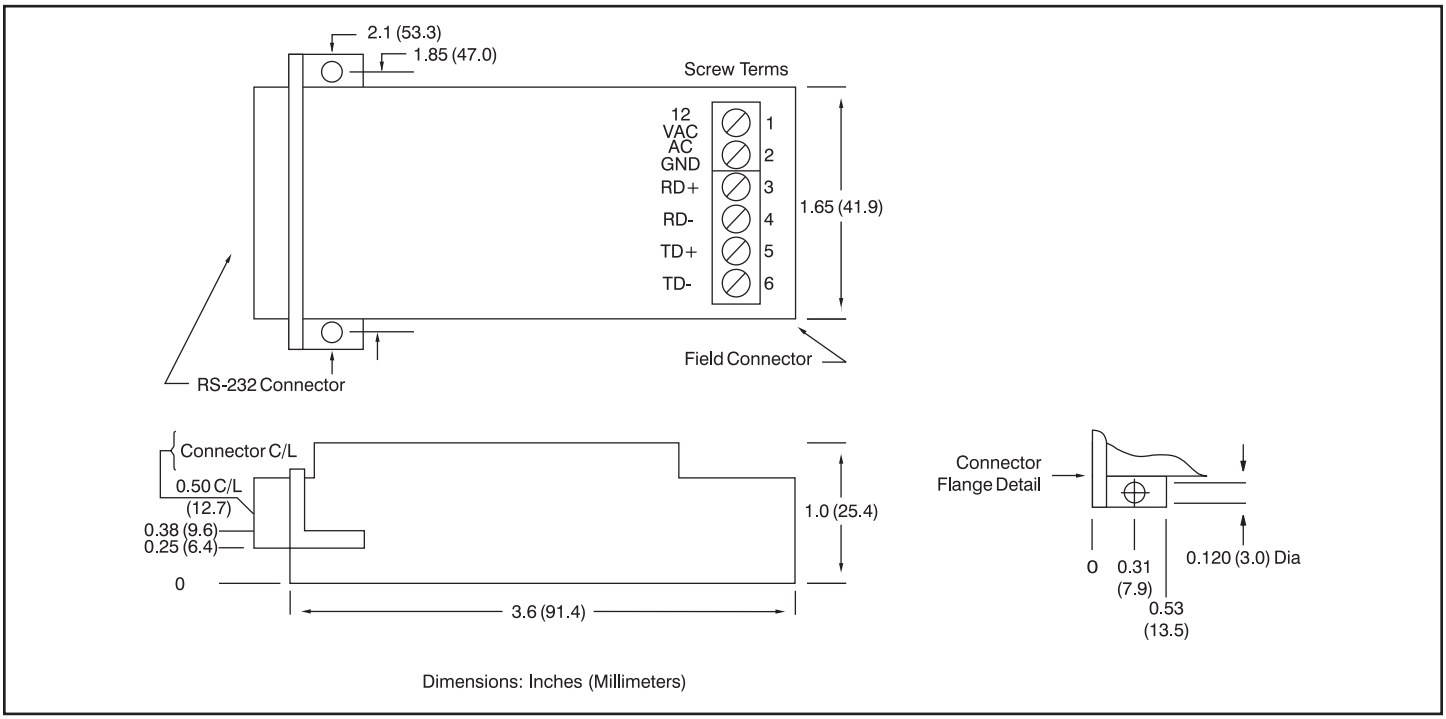

Figure 2: LDM30 Dimensions

©1995-2017 Dataforth Corporation, All Rights Reserved ISO9001:2008-Registered QMS

LDM35

Signal Powered RS-232 Line Drivers

Description

The LDM35 series of products is designed to allow video display terminals (VDTs) and other RS-232 devices to be connected over distances sufficient to cover any industrial or institutional complex of buildings. These line drivers feature a rugged enclosure small enough to mount on the back panel of VDT units, saving valuable desk and floor space.

The LDM35 series does not require a power supply for operation. The use of low power circuits and a sensitive optical receiver allows the devices to derive all necessary power from the RS-232 data and control signal. They are designed for full-duplex, asynchronous operation over two, DC-continuity, non-loaded, twisted-wire pairs. Two-wire simplex operation may be accomplished over two wires. The line driver circuits — and, consequently, the host device — are protected from electrical transients due to lightning strikes or operation of heavy industrial equipment.

Each device features a convenient Data-Communication Equipment (DCE) to Data-Terminal Equipment (DTE) switch which reverses pins 2 and 3 of the RS-232 connector. For installation and troubleshooting, each unit has diagnostic Light-Emitting Diodes (LEDs) on the transmit and receive lines.

The RS-232 connector may be ordered as a male or female 25-pin connector. Field connection is made through a modern, solderless, screw-termination assembly.

Features

- Signal-powered: No Power Source Required
- Optical Isolation: Breaks Ground Loops
- Heavy Duty Surge Protectors: Prevents Lightning Damage
- LED Diagnostic Indicators: Simplifies Installation and System Troubleshooting
- Operation to 2 Miles (3.3km) at 9600bps, 0.5 Miles (0.8km) at 19,200bps, 7 Miles (11.7km) at 1200bps
- Four-Wire Full Duplex, Two-Wire Simplex
- Selection of Connectors
- Wide Operating Temperature Range, 0°C to +70°C
- Null Modem Switch
- CE Compliant

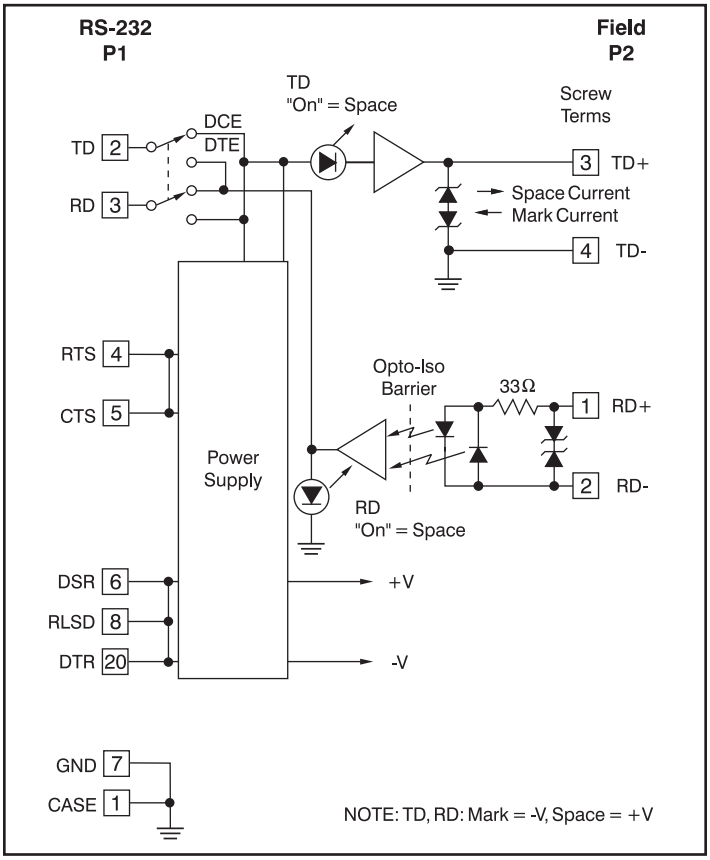

Figure 1: LDM35 Block Diagram

©1995-2017 Dataforth Corporation, All Rights Reserved ISO9001:2008-Registered QMS

Specifications Typical* at T_A = +25°C

Model	LDM35
Bit Rate (bps) bps vs Distance Distance(miles) Distance(km)	0-19.2k 19.2k 9.6k 4.8k 2.4k 1.2k-0 0.5 2.0 3.0 5.0 7.0 0.8 3.2 4.8 8.1 11.3
Common Mode Isolation Differential Mode Surge Protection (3 devices)	Surge: 500Vp, 1min. Continuous: 300Vrms ANSI/IEEE C37.90.1
Modes	Asynchronous 4-wire full-duplex, 2-wire simplex
Channel Lines(1) Control Lines(1)	TD, RD RTS, CTS, DTR, DSR, RLSD
Power RS-232 Data RS-232 Control Signals	RS-232 data and control signals ±5V to ±15V, 3.0mA to 10.0mA ±6V to ±15V, 3.0mA to 10.0mA
Environmental: Operating Temperature Range Storage Temperature Range Relative Humidity	 0°C to +70°C –10°C to +85°C 0 to 95% Noncondensing
Dimensions	3.6" x 2.1" x 1" (91.4mm x 53.3mm x 25.4mm)
Weight	3.2 oz (91g) max
MTTF(2)	>150,000 hrs

NOTES:
*Contact factory or your local Dataforth sales office for maximum values.
(1) TD = Transmit Data, RD = Receive Data, RTS = Request To Send, CTS = Clear To Send, DTR = Data Terminal Ready, DSR = Data Set Ready, RLSD = Received Line Signal Detect.
(2) Ground-benign environmental conditions (no salt atmosphere, <50°C ambient temperature).

Ordering Information

Model	25-Pin Connector	Termination
LDM35-P	Male	Screw terminals
LDM35-S	Female	Screw terminals

RS-232 P1 Pin Descriptions				Field P2 Pin Description
				Screw Terms
Pin 1	CASE Ground			Pin 1 RD+
Pin 2	TD	[3]	Transmit Data	Pin 2 RD-
Pin 3	RD	[2]	Receive Data	Pin 3 TD+
Pin 4	RTS	[7]	Req. To Send	Pin 4 TD-
Pin 5	CTS	[8]	Clear To Send	
Pin 6	DSR	[6]	Data Set Ready	RD+ = Receive Data +
Pin 7	GND	[5]	Signal Ground	RD- = Receive Data -
Pin 8	RLSD	[1]	Receive Line Signal Detect	TD+ = Transmit Data +
Pin 20	DTR	[4]	Data Terminal Ready	TD- = Transmit Data -

Pin numbers given are for the 25-pin connector with the 9-pin equivalent in [ ].

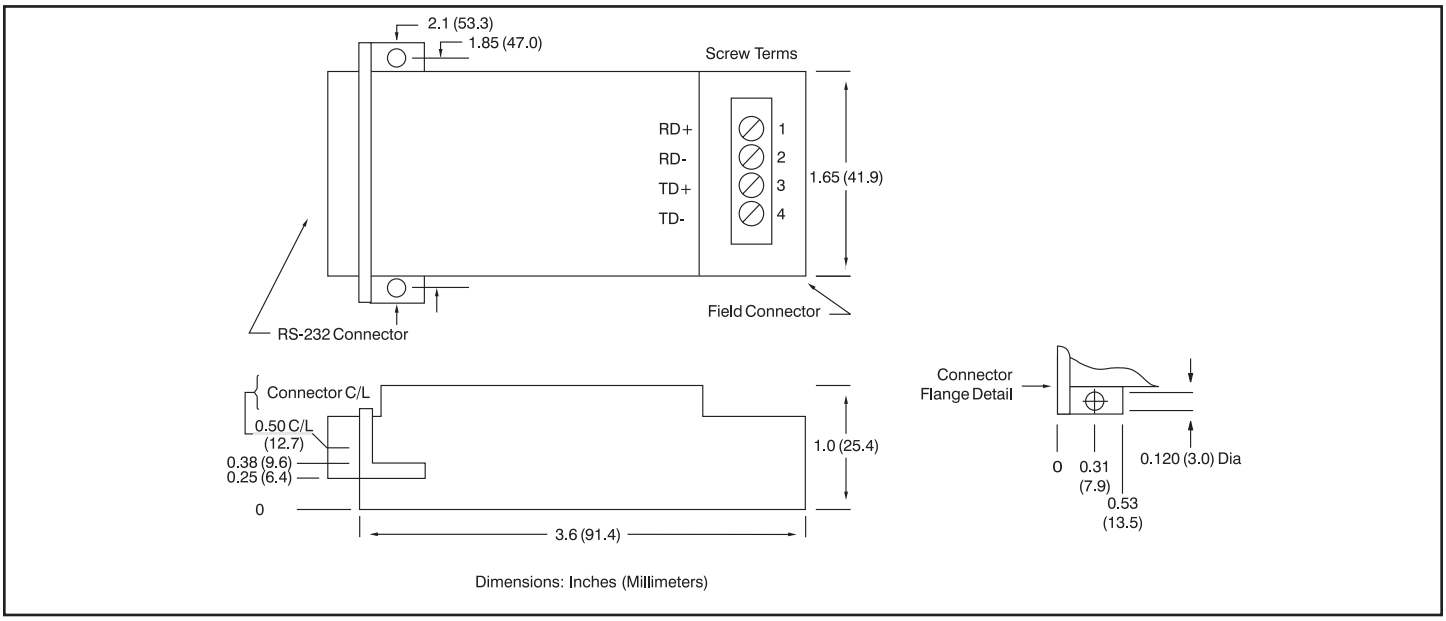

Figure 2: LDM35 Dimensions

©1995-2017 Dataforth Corporation, All Rights Reserved ISO9001:2008-Registered QMS

LDM70

Fully Isolated RS-232 Line Drivers

Description

The LDM70 series of products is designed to allow video display terminals (VDTs) and other RS-232 devices to be connected over distances sufficient to cover any industrial or institutional complex of buildings. These line drivers feature a rugged aluminum enclosure small enough to mount on the back panel of VDT units, saving valuable desk and floor space.

The LDM70 series is designed for full duplex, asynchronous operation over two DC-continuity, non-loaded, twisted-wire pairs. Through special high-speed optically coupled circuits, they may communicate at data rates up to 57,600 bits per second. A handshake operation is implemented over the same two-wire pairs. A self-powered model and a host-powered model are available. The self-powered unit uses 12VAC from a wall-mounted transformer, while the host-powered unit takes ±DC power from pins 9 and 10 of the RS-232 connector. The line driver circuits — and, consequently, the host device — are protected from electrical transients due to lightning strikes or operation of heavy industrial equipment.

Each device features a convenient Data-Communication Equipment (DCE) to Data-Terminal Equipment (DTE) switch which reverses pins 2 and 3 of the RS-232 connector. For installation and troubleshooting, each unit has diagnostic Light-Emitting Diodes (LEDs) on the transmit and receive lines. In addition, LEDs indicate valid carrier detect and data terminal ready.

The RS-232 connector may be ordered as a male or female 25-pin connector. Field connection is made through a modern, solderless, screw-termination assembly.

Features

- DC to 57,600bps
- Complete Isolation with Optical Couplers and Power DC-to-DC Converter
- Data Terminal Ready, Carrier Detect Handshake without Extra Wires
- Surge Protectors
- Four LED Diagnostic Indicators
- Operation to 3 Miles (5km) at 9600bps, 1 Mile (1.7km) at 19,200bps, 0.5 Miles (0.8km) at 57,600bps
- Four-Wire Full Duplex, Two-Wire Simplex
- Self-Powered or Host-Powered
- Selection of Connectors
- Wide Operating Temperature Range, 0 to +70°C
- CE Compliant

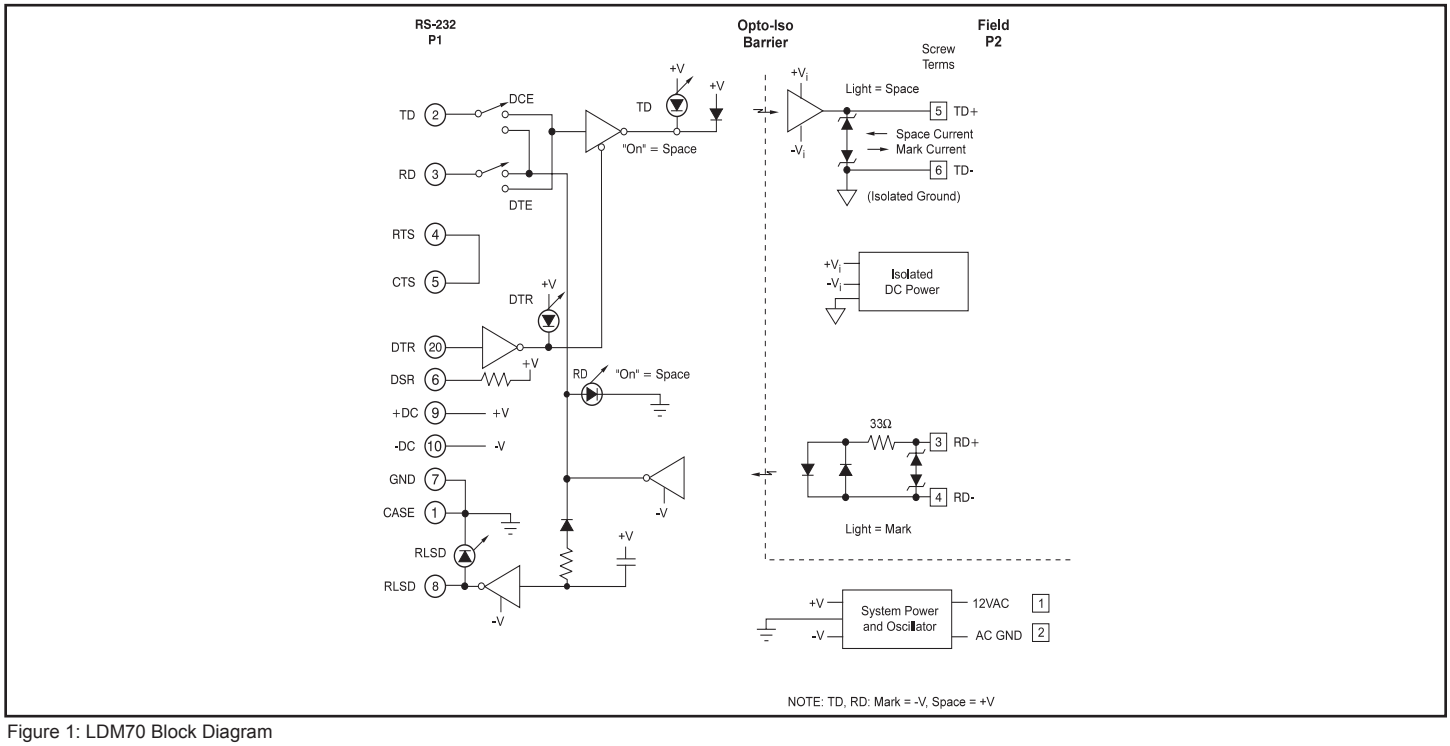

Figure 1: LDM70 Block Diagram

©1995-2017 Dataforth Corporation, All Rights Reserved ISO9001:2008-Registered QMS

Specifications Typical* at T_A = +25°C

Model	LDM70
Bit Rate (bps) bps vs Distance Distance(miles) Distance(km)	0-57.6k 57.6k 38.4k 19.2k 9.6k 4.8k 2.4k 1.2k-0 0.5 0.75 1.0 3.0 5.0 7.0 12.0 0.8 1.21 1.6 4.8 8.1 12.9 19.3
Common Mode Isolation Differential Mode Surge Protection (3 devices)	Surge: 1500Vp, 1 min. Continuous: 1000Vrms ANSI/IEEE C37.90.1
Modes	Asynchronous 4-wire duplex, 2-wire simplex
Channel Lines(1) Control Lines(1)	TD, RD DTR, RLSD
Power AC operation(2) DC operation	 12VAC at 120mA ±9VDC to ±15VDC, 45mA
Environmental: Operating Temperature Range Storage Temperature Range Relative Humidity	 0°C to +70°C –40°C to +85°C 0 to 95% Noncondensing
Dimensions	5.7" x 2.1" x 1" (144.8mm x 53.3mm x 25.4mm)
Weight PT3 and PT3E	5.5 oz (156g) max 11.0 oz (312g) max
MTTF(3)	>100,000 hrs

NOTES :
*Contact factory or your local Dataforth sales office for maximum values.
(1) TD = Transmit Data, RD = Receive Data, DTR = Data Terminal Ready, RLSD = Received Line Signal Detect.
(2) 120VAC and 220VAC power transformers are available.
(3) Ground-benign environmental conditions (no salt atmosphere, <50°C ambient temperature).

Ordering Information

Model	Type	Power	Termination
LDM70-P	Male	Host-powered	Screw termination
LDM70-S	Female	Host-powered	Screw termination
LDM70-PT	Male	U.S. transformer	Screw termination
LDM70-ST	Female	U.S. transformer	Screw termination
LDM70-PE	Male	European transformer	Screw termination
LDM70-SE	Female	European transformer	Screw termination

Model	Description
PT3	U.S. style wall mount transformer, 120VAC
PT3E	Euro style wall mount transformer, 220VAC

RS-232 P1 Pin Descriptions				Field P2 Pin Description
				Screw Terms
Pin 1	CASE Ground			Pin 1 12VAC
Pin 2	TD	[3]	Transmit Data	Pin 2 AC GND
Pin 3	RD	[2]	Receive Data	Pin 3 RD+
Pin 4	RTS	[7]	Req. To Send	Pin 4 RD-
Pin 5	CTS	[8]	Clear To Send	Pin 5 TD+
Pin 6	DSR	[6]	Data Set Ready	Pin 6 TD-
Pin 7	GND	[5]	Signal Ground	
Pin 8	RLSD	[1]	Receive Line Signal Detect	RD+ = Receive Data +
Pin 9	+DC		Positive DC Supply Input	RD- = Receive Data -
Pin 10	-DC		Negative DC Supply Input	TD+ = Transmit Data +
Pin 20	DTR	[4]	Data Terminal Ready	TD- = Transmit Data -

Pin numbers given are for the 25-pin connector with the 9-pin equivalent in [ ].

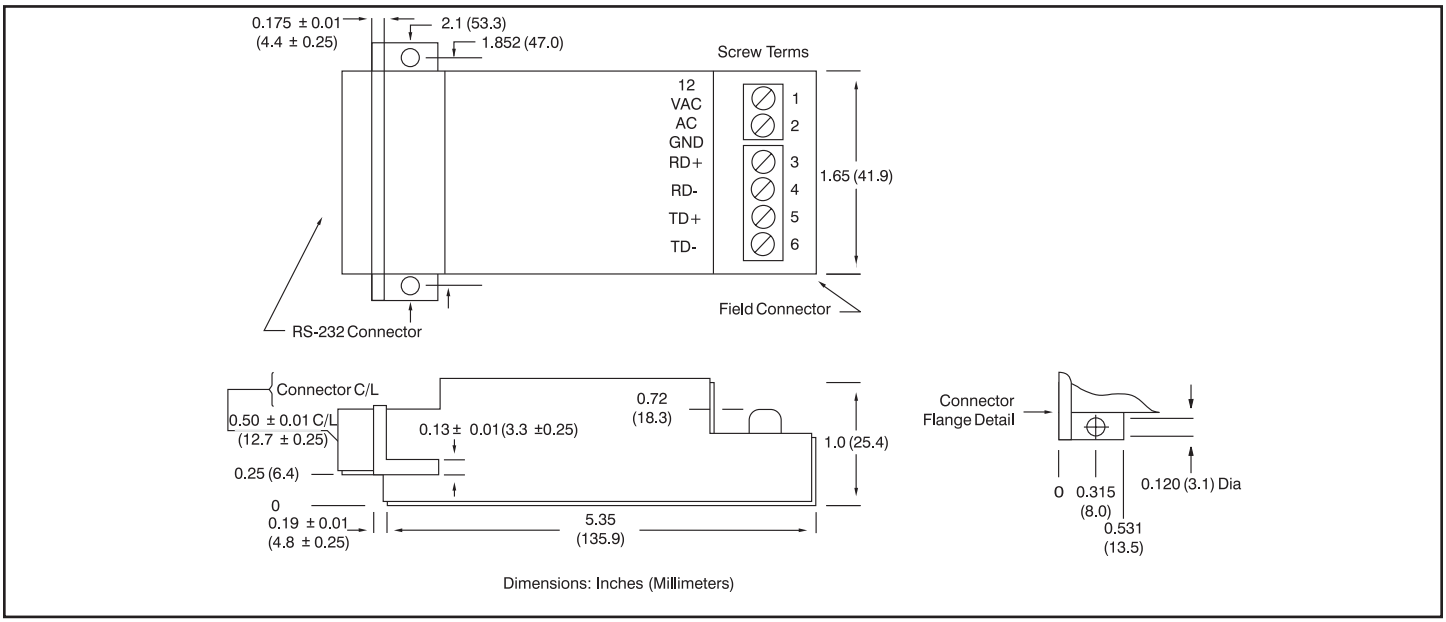

Figure 2: LDM70 Dimensions

©1995-2017 Dataforth Corporation, All Rights Reserved ISO9001:2008-Registered QMS

LDM422

Fully Isolated RS-232/422 Converters

Description

The LDM422 is a compact RS-232 to RS-422 converter which features a complete electrical isolation barrier and heavy duty electrical surge protectors. These devices feature a rugged aluminum enclosure small enough to mount on the back panel of typical computer equipment, saving valuable desk and floor space. Isolation is provided by optical couplers and a DC-to-DC converter. The RS-232 connection is through male or female EIA 25-pin connectors. The RS422 connections are made through convenient solderless screw terminals.

The LDM422 series is designed for full duplex operation over two-wire pairs. Outputs are tri-state, allowing multidropping of up to 32 units. Hardware handshake is available over two separate wire pairs. Data rates are 75 to 19,200 bits per second. Six diagnostic LED indicators are provided (see Figure 1) for installation guidance and system troubleshooting. The RS-232 interface supports Request To Send, Clear To Send, Data Set Ready, Received Line Signal Detect, and Data Terminal Ready. A convenient null modem switch is provided for the data lines. The RS-422 interface supports Request To Send and Clear To Send on separate wire pairs. The LDM422 may be used to convert two sets of send and receive channels by using RTS and CTS circuits as the second data channels. Data rates are the same. The units use 12VAC from a wall-mounted transformer or ±12VDC to pins 9 (+) and 10 (–) of the RS-232 connector.

Features

- Complete Isolation with Optical Couplers and Power DC-to-DC Converter
- Industrial Surge Protection Devices
- Six LED Diagnostic Indicators
- DC to 19,200bps at 6000 Feet (1800m), 9600bps at 3 Miles (5km)
- Request-To-Send, Clear-To-Send Handshake
- Tri-state Outputs for Multidrop Applications
- Selection of Connectors
- Wide Operating Temperature Range
- Solderless Screw Terminal Field Connections
- CE Compliant

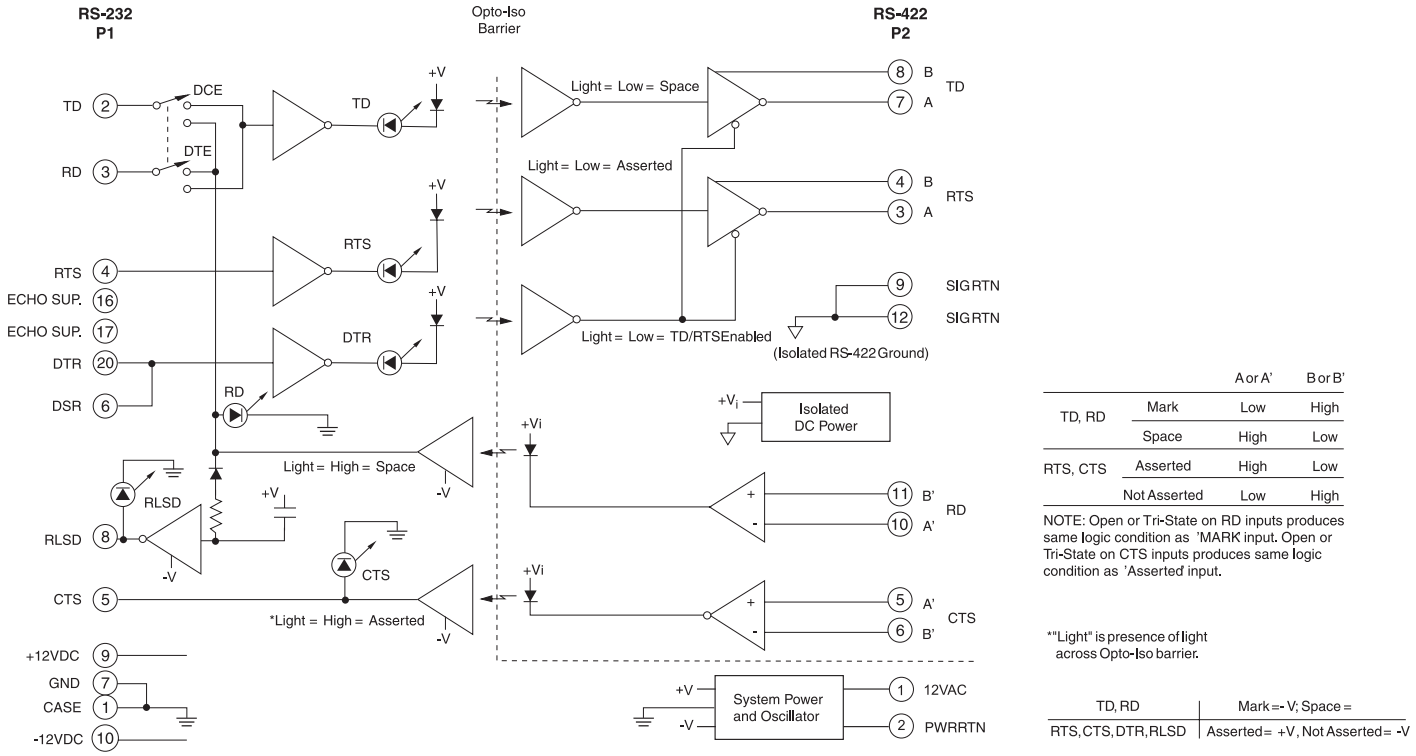

		A or A'	B or B'
TD, RD	Mark	Low	High
	Space	High	Low
RTS, CTS	Asserted	High	Low
	Not Asserted	Low	High

NOTE: Open or Tri-State on RD inputs produces same logic condition as 'MARK input. Open or Tri-State on CTS inputs produces same logic condition as 'Asserted input.

*"Light" is presence of light across Opto-Iso barrier.

TD, RD	Mark = -V; Space =
RTS, CTS, DTR, RLSD	Asserted = +V, Not Asserted = -V

Figure 1: LDM422 Block Diagram

©1995-2017 Dataforth Corporation, All Rights Reserved ISO9001:2008-Registered QMS

Specifications Typical* at T_A = +25°C

Model	LDM422
Bit Rate (bps) bps vs Distance Distance(miles) Distance(km)	0-19.2k 19.2k 9.6k 4.8k 2.4k 1.2k-0 1.14 3.0 4.0 5.0 7.0 1.8 4.8 6.4 8.1 11.3
Maximum Multidrop Units	32. Reduced distances may be required when as many as 32 units are multidropped. No restrictions apply for distances of 1 mile (1.7 km) or less.
Common Mode Isolation Differential Mode Surge Protection (9 devices)	Surge: 1500Vp, 1 min. Continuous: 1000Vrms (AC input) ANSI/IEEE C37.90.1 (all RS-422 inputs and outputs)
Modes	Asynchronous 4-wire duplex, 2-wire half-duplex, 2-wire simplex
Channel Lines(1) Control Lines(1)	TD, RD, RTS, CTS RTS, CTS, DTR, DSR, RLSD
Null Modem Switch	1 (Reverses RS-232 pins 2 and 3)
RS-422 Output Drive RS-422 Input Impedance	20mA min/output 6kΩ min/input
Power AC operation(2) DC operation	 12VAC, ±10%, 10W screw terms 1 & 2 +11.5VDC to +17.0VDC at 400mA on pin 9 –11.5VDC to –17.0VDC at 400mA on pin 10
Environmental: Operating Temperature Range Storage Temperature Range Relative Humidity	 0°C to +70°C –40°C to +85°C 0 to 95% Noncondensing
Dimensions	6.6" x 2.1" x 1.28" (167.6mm x 53.3mm x 32.5mm)
Weight PT3 and PT3E	7 oz (198g) max 11.0 oz (312g) max
MTTF(3)	>100,000 hrs

NOTES :
*Contact factory or your local Dataforth sales office for maximum values.
(1) TD = Transmit Data, RD = Receive Data, RTS = Request To Send, CTS = Clear To Send, DTR = Data Terminal Ready, DSR = Data Set Ready, RLSD = Received Line Signal Detect.
(2) 120VAC and 220VAC power transformers are available.
(3) Ground-benign environmental conditions (no salt atmosphere, <50°C ambient temperature).

Ordering Information

Model	Description
LDM422-P	Male RS-232 connector
LDM422-S	Female RS-232 connector
LDM422-PT	Male RS-232 connector and U.S. power transformer
LDM422-ST	Female RS-232 connector and U.S. power transformer
LDM422-PE	Male RS-232 connector, Euro power transformer
LDM422-SE	Female RS-232 connector, Euro power transformer
PT3	Wall mount U.S. power transformer, 120VAC
PT3E	Wall mount Euro power transformer, 220VAC

RS-232 P1 Pin Descriptions				RS-422 P2 Pin Desc.	
Pin 1	CASE		Ground	Pin 1	12VAC
Pin 2	TD	[3]	Transmit Data	Pin 2	PWR RTN
Pin 3	RD	[2]	Receive Data	Pin 3	RTS A
Pin 4	RTS	[7]	Request To Send	Pin 4	RTS B
Pin 5	CTS	[8]	Clear To Send	Pin 5	CTS A'
Pin 6	DSR	[6]	Data Set Ready (connected to Data Terminal Ready)	Pin 6 Pin 7 Pin 8	CTS B' TD A TD B
Pin 7	GND	[5]	Signal Ground	Pin 9	SIG RTN
Pin 8	RLSD	[1]	Receive Line Signal Detect	Pin 10	RD A'
Pin 9	+12VDC		Positive DC Supply Input	Pin 11	RD B'
Pin 10	–12VDC		Negative DC Supply Input	Pin 12	SIG RTN
Pin 16	Echo Sup		Echo Suppression (tie to pin 17 to enable)		
Pin 17	Echo Sup		Echo Suppression (tie to pin 16 to enable)		
Pin 20	DTR	[4]	Data Terminal Ready (connected to Data Set Ready)		

Pin numbers given are for the 25-pin connector with the 9-pin equivalent in [ ].

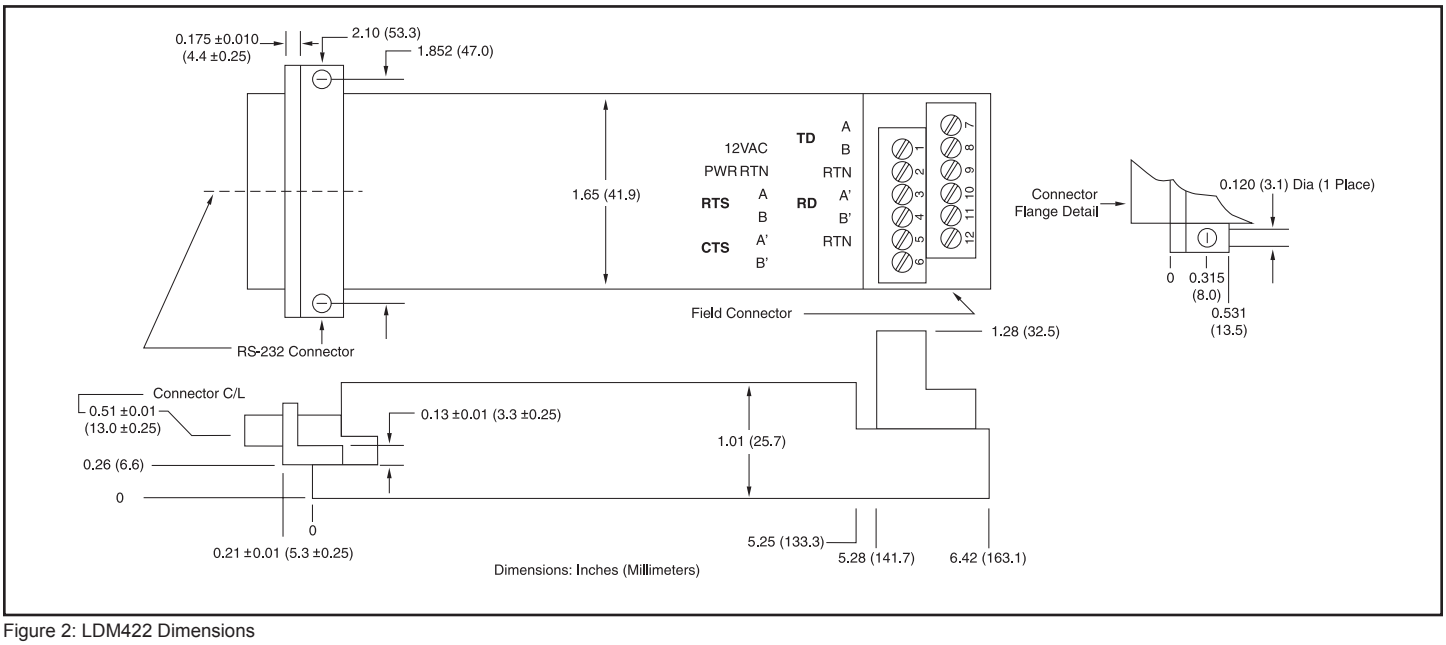

Figure 2: LDM422 Dimensions

©1995-2017 Dataforth Corporation, All Rights Reserved ISO9001:2008-Registered QMS

LDM485

Fully Isolated RS-232/485 Converters

Description

The LDM485 is a compact RS-232 to RS-485 converter which features a complete electrical isolation barrier and heavy duty electrical surge protectors. These devices feature a rugged aluminum enclosure small enough to mount on the back panel of typical computer equipment, saving valuable desk and floor space. Isolation is provided by optical couplers and a DC-to-DC converter. The RS-232 connection is through male or female EIA 25-pin connectors. The RS-485 connections are made through convenient solderless screw terminals.

The LDM485 series is designed for full duplex operation over two-wire pairs. Outputs are tri-state, allowing multidropping of up to 64 units. Hardware handshake is available over two separate wire pairs. Data rates are DC to 57.6k bits per second. Six diagnostic LED indicators are provided (see Figure 1) for installation guidance and system troubleshooting. The RS-232 interface supports Request To Send, Clear To Send, Data Set Ready, Received Line Signal Detect, and Data Terminal Ready. A convenient null modem switch is provided for the data lines. Also, a line termination switch connects a line termination resistor and line bias resistors to the RS-485 receive lines. The RS-485 interface supports Request To Send and Clear To Send on separate wire pairs. The LDM485 may be used to convert two sets of send and receive channels by using RTS and CTS circuits as the second data channels. Data rates are the same. The units use 12VAC from a wall-mounted transformer to screw terminals 1 and 2 on the RS-485 connector. Alternately, they can use ±12VDC to pins 9 (+) and 10 (–) of the RS-232 connector.

Features

- Complete Isolation with Optical Couplers and Power DC-to-DC Converter
- Industrial Surge Protection Devices
- Six LED Diagnostic Indicators
- 19.2kbps at 3 Miles (5km), 57.6kbps at 0.5 Miles (0.8 km)
- Request-To-Send, Clear-To-Send Handshake
- Tri-state Outputs for Multidrop Applications, Up to 64 Devices
- Selection of Connectors
- Wide Operating Temperature Range
- Solderless Screw Terminal Field Connections
- CE Compliant

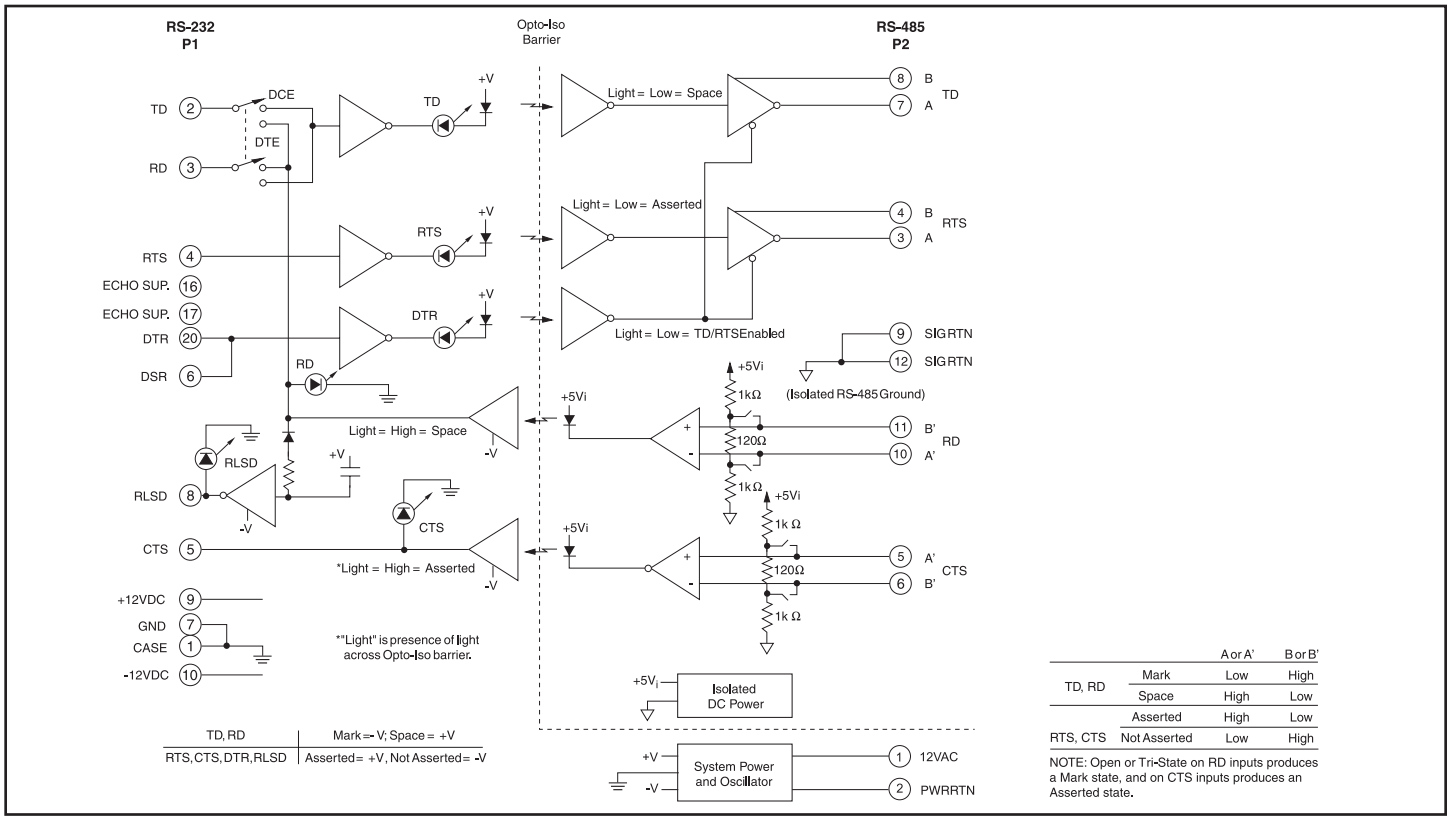

Figure 1: LDM485 Block Diagram

©1995-2017 Dataforth Corporation, All Rights Reserved ISO9001:2008-Registered QMS

Specifications Typical* at T_A = +25°C

Model	LDM485
Bit Rate (bps) bps vs Distance Distance(miles)(1) Distance(km)	0-57.6k 57.6k 38.4k 19.2k 9.6k 4.8k 1.2k-0 0.5 1.0 3.0 4.0 5.0 8.0 0.8 1.6 4.8 6.4 8.1 12.9
Wire Capacitance Maximum Multidrop Units	Equal to 25pf per foot and up to 32 multidrop units 64
Common Mode Isolation Differential Mode Surge Protection (9 devices)	Surge: 1500Vp, 1 min. Continuous: 1000Vrms (AC input) ANSI/IEEE C37.90.1 (all RS-485 inputs and outputs)
Modes	Asynchronous 4-wire duplex, 2-wire half-duplex, 2-wire simplex
Channel Lines(2) Control Lines(2)	TD, RD, RTS, CTS RTS, CTS, DTR, DSR, RLSD
Null Modem Switch	1 (Reverses RS-232 pins 2 and 3)
RS-485 Output Drive RS-485 Input Impedance	60mA max/output 12kΩ min/input
Power AC operation(3) DC operation	 12VAC, ±10%, 10W screw terms 1 & 2 +11.5VDC to +17.0VDC at 500mA on pin 9 –11.5VDC to –17.0VDC at 100mA on pin 10
Environmental: Operating Temperature Range Storage Temperature Range Relative Humidity	 0°C to +70°C –40°C to +85°C 0 to 95% Noncondensing
Dimensions	6.6" x 2.1" x 1.28" (167.6mm x 53.3mm x 32.5mm)
Weight PT3 and PT3E	7 oz (198g) max 11.0 oz (312g) max
MTTF(4)	>100,000 hrs

NOTES:
*Contact factory or your local Dataforth sales office for maximum values.
(1) Distances reduced if multidropping more than 32 units; by 30% for 33-48 units; 50% for 49-64.
(2) TD = Transmit Data, RD = Receive Data, RTS = Request To Send, CTS = Clear To Send, DTR = Data Terminal Ready, DSR = Data Set Ready, RLSD = Received Line Signal Detect.
(3) 120VAC and 220VAC power transformers are available.
(4) Ground-benign environmental conditions (no salt atmosphere, <50°C ambient temperature).

Ordering Information

Model	Description
LDM485-P	Male RS-232 connector
LDM485-S	Female RS-232 connector
LDM485-PT	Male RS-232 connector and U.S. power transformer
LDM485-ST	Female RS-232 connector and U.S. power transformer
LDM485-PE	Male RS-232 connector, European power transformer
LDM485-SE	Female RS-232 connector, European power transformer
PT3	Wall mount U.S. power transformer, 120VAC
PT3E	Wall mount Euro power transformer, 220VAC

RS-232 Pin Descriptions				RS-485 P2 Pin Desc.	
Pin 1	CASE		Ground	Pin 1	12VAC
Pin 2	TD	[3]	Transmit Data	Pin 2	PWR RTN
Pin 3	RD	[2]	Receive Data	Pin 3	RTS A
Pin 4	RTS	[7]	Request To Send	Pin 4	RTS B
Pin 5	CTS	[8]	Clear To Send	Pin 5	CTS A'
Pin 6	DSR	[6]	Data Set Ready (connected to Data Terminal Ready)	Pin 6	CTS B'
				Pin 7	TD A
				Pin 8	TD B
Pin 7	GND	[5]	Signal Ground	Pin 9	SIG RTN
Pin 8	RLSD	[1]	Receive Line Signal Detect	Pin 10	RD A'
Pin 9	+12VDC		Positive DC Supply Input	Pin 11	RD B'
Pin 10	–12VDC		Negative DC Supply Input	Pin 12	SIG RTN
Pin 16	Echo Sup		Echo Suppression (tie to pin 17 to enable)		
Pin 17	Echo Sup		Echo Suppression (tie to pin 16 to enable)		
Pin 20	DTR	[4]	Data Terminal Ready (connected to Data Set Ready)		

Pin numbers given are for the 25-pin connector with the 9-pin equivalent in [ ].

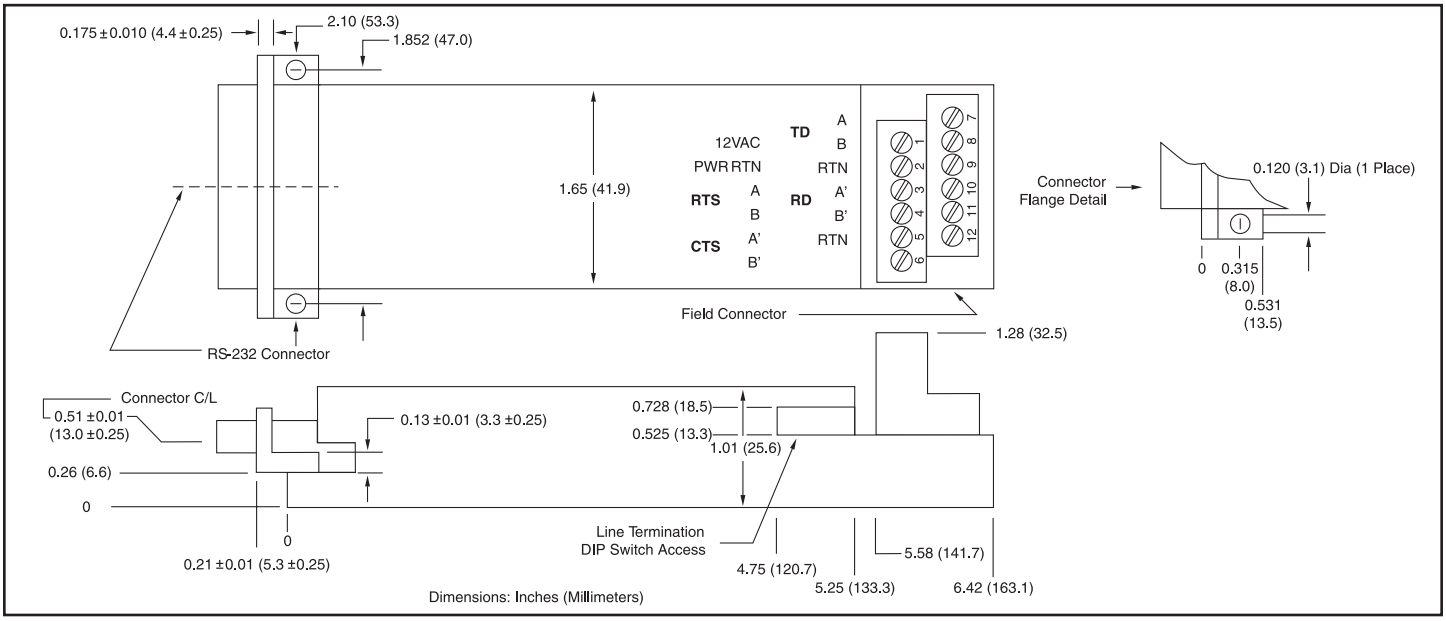

Figure 2: LDM485 Dimensions

©1995-2017 Dataforth Corporation, All Rights Reserved ISO9001:2008-Registered QMS

LDM80

Signal Powered Fiber Optic Converters

Description

The LDM80 is a small, inexpensive fiber optic transmitter/receiver completely powered by the host RS-232 port. The enclosure for the LDM80 is a conductive shell which greatly reduces RF radiation and susceptibility. The rugged metal enclosure is small enough to mount on the back panel of typical computer equipment saving valuable desk and floor space. A pair of these units allows most RS-232C cable links to be replaced and extended with a duplex fiber optic cable. The normal 50-foot (15m) RS-232 limit may be extended to 2.2 miles (3.5 km). Fiber optic data communications provide complete EMI/RFI rejection, isolation, elimination of ground loops, and reduced error rates. Data security is enhanced by almost nonexistent electromagnetic emissions. The RS-232 connection is through male or female EIA 25-pin connectors. The fiber optic connection is through ST connectors.

The LDM80 is equivalent to a 3-wire, full duplex, RS-232 circuit. Handshake signals are locally connected as in Figure 1. Indicating LEDs come on during a “SPACE” on transmit or receive data. A TD/RD reversing DIP switch is provided for connection to DTE (Data Terminal Equipment) or DCE (Data Communication Equipment) ports.

Features

- Data Rates to 19.2kbps at 2.2 Miles (3.5km)
- 17dB Optical Link Power Budget
- Powered by RS-232 Host Port Signals
- Full Duplex Asynchronous Operation
- Indicating LEDs
- DCE/DTE Switch
- Designed for FCC Class A Requirements
- Complies with FCC Class A Requirements
- Pinned or Socketed RS-232 Connectors
- CE Compliant

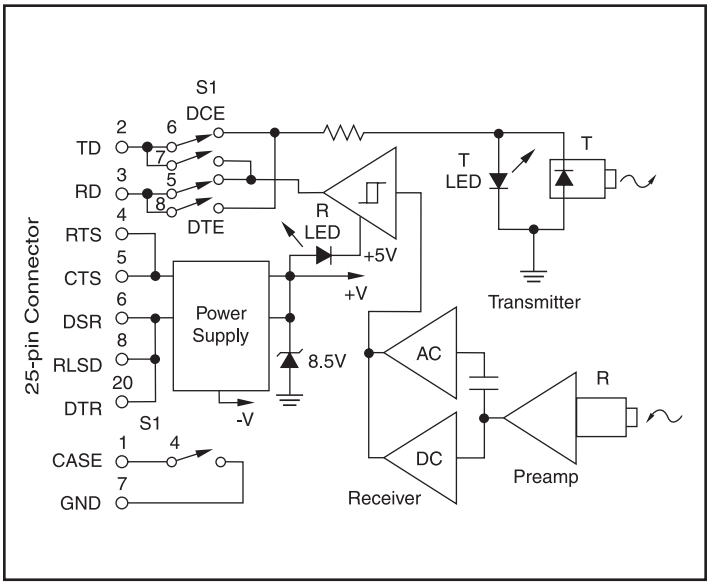

Figure 1: LDM80 Block Diagram

©1995-2017 Dataforth Corporation, All Rights Reserved ISO9001:2008-Registered QMS

Specifications

Typical* at T_A = +25°C

Model	LDM80
Bit Rate (bps)	0-19.2k
Distance Over Bit Rate Range	
Fiber Core Diameter (µm)	Max Cable Length / Loss Budget (dB)
100.0 (glass)	2.2 mi (3.5) (km) / 17
50.0 (glass)	1.6 (2.6) / 9
62.5 (glass)	1.2 (1.9) / 11
85.0 (glass)	2.2 (3.5) / 16
200.0 (glass)	2.2 (3.5) / 23
1000.0 (plastic)	98 feet 30 (meters) / 32
Modes	Asynchronous 2-fiber full duplex, 1-fiber simplex
Channel Lines(1)	TD, RD
Control Lines(1)	RTS, CTS, DTR, DSR, RLSD
Optical Transmitter Output from 1m cable	850 nm wavelength –26dB typ, –27dB min, –18dB max
Optical Receiver Power Input for 4µs Pulse Distortion	–44dB min
Optical Connectors	ST Compatible
RS-232 Output Voltage with 3kΩ Load	+5V logic 0, –5V logic 1
DCE/DTE Switch	1
Diagnostic LEDs	2
Power	
Port Power and/or DC operation	+5.0 to +8.5VDC, no current limit, 5mA >+8.5 VDC, 10mA current limit
Environmental:	
Operating Temperature Range	–20°C to +70°C
Storage Temperature Range	–40°C to +85°C
Relative Humidity	0 to 95% Noncondensing
Dimensions	3.57" x 2.1" x 0.74" (90.7mm x 53.3mm x 18.8mm)
Weight	4.2 oz (119g) max
MTTF(2)	>100,000 hrs

Ordering Information

Model	Description
LDM80-P-025	Pinned RS-232 connector, ST fiber optic connector
LDM80-S-025	Socketed RS-232 connector, ST fiber optic connector

Pin Descriptions				Fiber Optic
Pin 1	CASE Ground			
Pin 2	TD	[3]	Transmit Data	
Pin 3	RD	[2]	Receive Data	T
Pin 4	RTS	[7]	Request To Send	
Pin 5	CTS	[8]	Clear To Send	
Pin 6	DSR	[6]	Data Set Ready	R
Pin 7	SIG GND	[5]	Signal Ground	
Pin 8	RLSD	[1]	Receive Line Signal Detect	
Pin 20	DTR	[4]	Data Terminal Ready	

Pin numbers given are for the 25-pin connector with the 9-pin equivalent in [ ].

NOTES:
*Contact factory or your local Dataforth sales office for maximum values.
(1) TD = Transmit Data, RD = Receive Data, RTS = Request To Send, CTS = Clear To Send, DTR = Data Terminal Ready, DSR = Data Set Ready, RLSD = Received Line Signal Detect.
(2) Ground-benign environmental conditions (no salt atmosphere, <50°C ambient temperature).

WARNING! *Modern PC ports may not have enough power to power the LDM80 sufficiently for reliable data communications. The user may have to bring in external power through RTS (pin 4), CTS (pin 5), DSR (pin 6), RLSD (pin 8), or DTR (pin 20) and GND (pin 7). The power needs to be at least +5VDC at 5mA for the receive circuits. Also, the Transmit Data port line (pin 2) should be able to provide at least ±5VDC at 5mA minimum.*

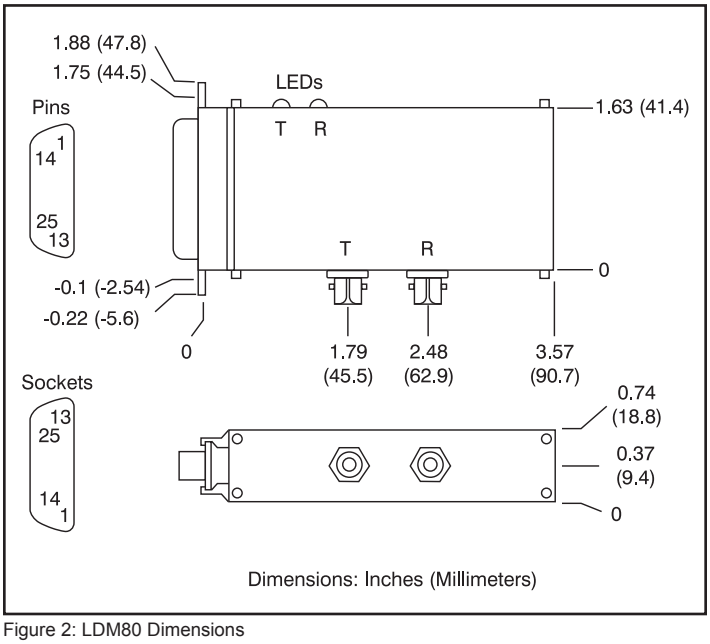

Figure 2: LDM80 Dimensions

©1995-2017 Dataforth Corporation, All Rights Reserved ISO9001:2008-Registered QMS

LDM85

Fiber Optic Converters

Description

The LDM85 is a small, inexpensive fiber optic transmitter/receiver. It features a complete RS-232/422/423 port as well as high speed TTL data transmit and receive. It is capable of data rates from DC to 5Mbps. A pair of these units allows most RS-232C cable links to be replaced and extended with a duplex fiber optic cable. The normal 50-foot RS-232 limit may be extended to 1.2 miles (2 km). Fiber optic data communications provide complete EMI/RFI rejection, isolation, elimination of ground loops, and reduced error rates. Data security is enhanced by almost nonexistent electromagnetic emissions. A unique multipoint capability allows local area networks to be formed with the isolation and data security of a fiber optic data highway.

The LDM85 is packaged in a rugged aluminum enclosure small enough to mount on the back panel of typical computer equipment, saving valuable desk and floor space. The RS-232 connection is through male or female EIA 25-pin connectors. The fiber optic connection is either through SMA (905) or ST connectors. Additional features include a TD/RD reversing switch for connection to DTE (Data Terminal Equipment) or DCE (Data Communication Equipment) ports, three diagnostic LED indicators, and locally connected handshake lines. The TTL port combined with the RS-232 port may be interfaced to RS-422/423 ports in 4-wire point-to-point mode only.

Features

- Data Rates to 5Mbps
- RS-232, RS-422, TTL System Interfaces
- Multipoint Capability
- LED Indicators
- DCE/DTE Switch
- Small Size
- Low Cost
- SMA- or ST-Compatible Optic Connectors
- 120/220VAC, +5VDC or 8 to 20VAC/DC Power
- CE Compliant

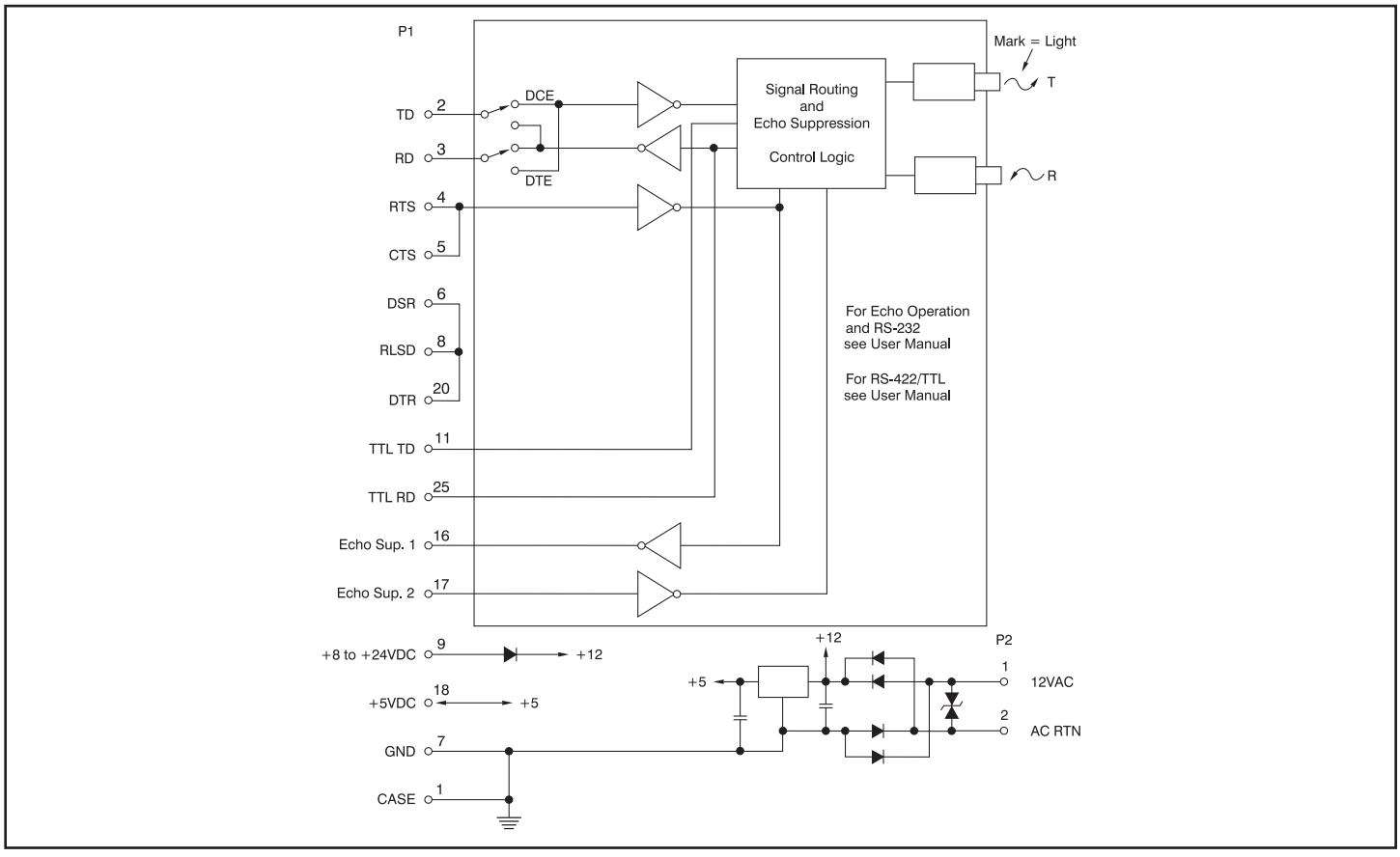

Figure 1: LDM85 Block Diagram

©1995-2017 Dataforth Corporation, All Rights Reserved ISO9001:2008-Registered QMS

Specifications Typical* at T_A = +25°C

Model	LDM85
Bit Rate Range TTL Bit Rate Range RS-232/422/423 Distance (miles) Distance (km)	0 – 5M, 0 – 2.5M NRZ 0 – 100k Up to 1.05 depending on cable Up to 1.75 depending on cable
Modes	Asynchronous 2-fiber full duplex, 1-fiber simplex
Channel Lines(1) Control Lines(1)	TD, RD, TTL TD, TTL RD RTS, CTS, DTR, DSR, RLSD
Optical Transmitter Numerical Aperture Optical Port Diameter Optical Receiver Equivalent Numerical Aperature Optical Port Diameter Optical Connectors	820nm wavelength –11.5dBm typical output from 1m cable, –16dBm minimum output (–40°C to +85°C) 0.49 290mm –25dBm to –12dBm dynamic range for logic 1, –24dBm minimum input logic 1 (–40°C to +85°C), –40dBm maximum input logic 0 0.50 400µm ST, SMA (905)
Power Budget	7dB (–40°C to +85°C), 9dB (–20°C to +55°C)
DCE/DTE Switch	1
Diagnostic LEDs	3
Power AC operation(2) DC operation	 120VAC or 220VAC (3W wall transformer) or 10VAC to 20VAC (3W transformer rating) +8VDC to +24VDC at 130mA or +5VDC ±0.25VDC at 130mA
Environmental: Operating Temperature Range Storage Temperature Range Relative Humidity	 –40°C to +85°C –40°C to +85°C 0 to 95% Noncondensing
Dimensions	3.75" x 2.1" x 1" (95.3mm x 53.3mm x 25.4mm)
Weight PT3, PT3E	3.7 oz (105g) max 11.0 oz (312g)
MTTF(3)	>120,000 hrs

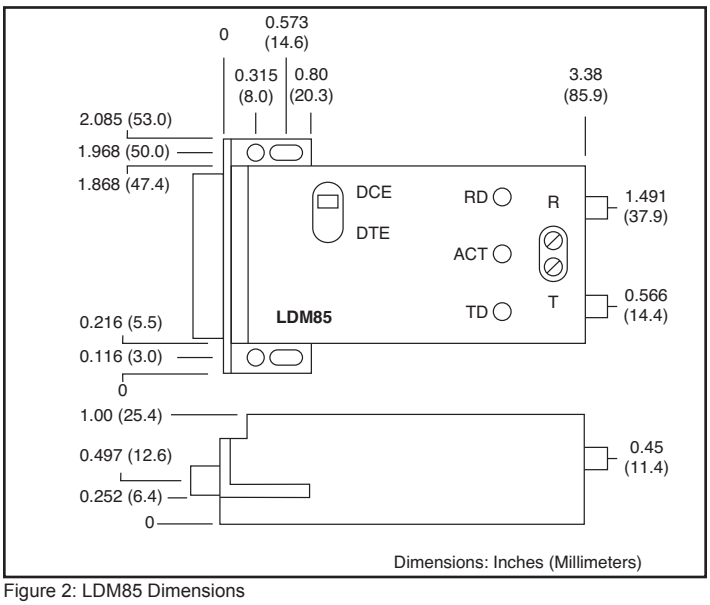

Figure 2: LDM85 Dimensions

Ordering Information

Model	Description
LDM85-P(4)	Pinned RS-232 connector
LDM85-S(4)	Socketed RS-232 connector
LDM85-PT(4)	Pinned RS-232 connector, U.S. wall transformer, 120VAC
LDM85-ST(4)	Socketed RS-232 connector, U.S. wall transformer, 120VAC
LDM85-PE(4)	Pinned RS-232 connector, European wall transformer, 220VAC
LDM85-SE(4)	Socketed RS-232 connector, European wall transformer, 220VAC
PT3	U.S. wall transformer, 120VAC
PT3E	European wall transformer, 220VAC

P1 Pin Descriptions				P2 Pin Descriptions
Pin 1	CASE		Ground	Pin 1 12VAC
Pin 2	TD	[3]	Transmit Data	Pin 2 AC RTN (GND)
Pin 3	RD	[2]	Receive Data	
Pin 4	RTS	[7]	Request To Send	
Pin 5	CTS	[8]	Clear To Send	
Pin 6	DSR	[6]	Data Set Ready	
Pin 7	GND	[5]	Signal Ground	
Pin 8	RLSD	[1]	Receive Line Signal Detect	
Pin 9	+VDC		+8 to +24 VDC Power In	
Pin 11	TTL TD		TTL TD Inverse of TD	
Pin 16	Echo Sup 1		Echo Suppress Control Out	
Pin 17	Echo Sup 2		Echo Suppress Control In	
Pin 18	+5VDC		+5VDC Power In, Pull Up Power Out	
Pin 20	DTR	[4]	Data Terminal Ready	
Pin 25	TTL RD		TTL RD Inverse of RD	

Fiber Optic

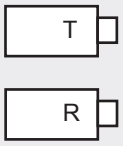

Pin numbers given are for the 25-pin connector with the 9-pin equivalent in [ ].

NOTES:
*Contact factory or your local Dataforth sales office for maximum values.
(1) TD = Transmit Data, RD = Receive Data, TTL TD and TTL RD are DCE referenced TTL signals, RTS = Request To Send, CTS = Clear To Send, DTR = Data Terminal Ready, DSR = Data Set Ready, RLSD = Received Line Signal Detect.
(2) 120VAC and 220VAC power transformers are available.
(3) Ground-benign environmental conditions (no salt atmosphere, <50°C ambient temperature).
(4) For ST fiber optic connector, add -025 to the part number.

©1995-2017 Dataforth Corporation, All Rights Reserved ISO9001:2008-Registered QMS

PT3

US Style Wall-Mount Transformer

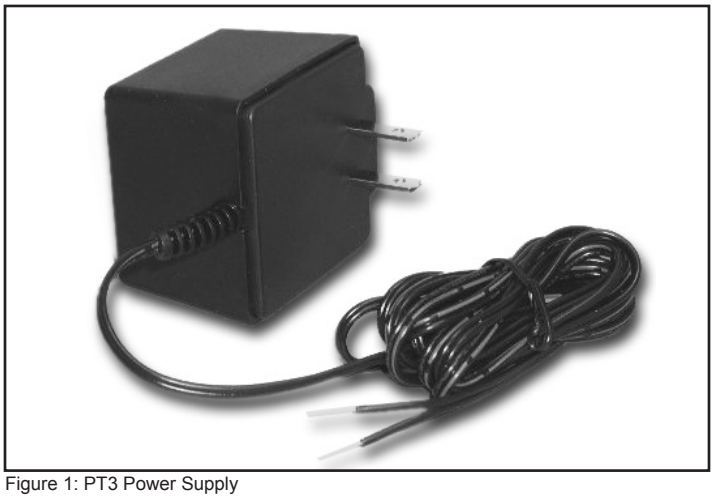

Figure 1: PT3 Power Supply

Specifications Typical* at T_A = +25°C

Model	PT3
Electrical Specifications Input Output	120VAC, 60Hz, 18W 12VAC, 1000mA, 12.0VA
Output Cable Length	6.0 ft (1.83m) minimum
Dimensions	2.21" x 2.14" x 1.65" (56.1mm x 54.4mm x 41.9mm)
Weight	11.0 oz (312g)

NOTES:
*Contact factory or your local Dataforth sales office for maximum values.

PT3E

European Style Transformer



Figure 2: PT3E Power Supply

Specifications Typical* at T_A = +25°C

Model	PT3E
Electrical Specifications Input Output	230VAC, 50Hz, 10W 12VAC, 500mA, 6VA
Input Cable Length Output Cable Length	3.5 ft (1.1m) minimum 6.0 ft (1.83m) minimum
Dimensions	2.70" x 1.95" x 1.60" (68.6mm x 49.5mm x 40.6mm)
Weight	11.0 oz (312g)

NOTES:
*Contact factory or your local Dataforth sales office for maximum values.

©1995-2017 Dataforth Corporation, All Rights Reserved ISO9001:2008-Registered QMS

DATAFORTH WARRANTY

Applying to Products Sold by Dataforth Corporation

a. **General.** Dataforth Corporation ("Dataforth") warrants that its products furnished under this Agreement will, at the time of delivery, be free from defects in material and workmanship and will conform to Dataforth's applicable specifications or, if appropriate, to buyer's specifications accepted in writing by Dataforth. DATAFORTH'S OBLIGATION OR LIABILITY TO BUYER FOR PRODUCTS WHICH DO NOT CONFORM TO THE ABOVE STATED WARRANTY SHALL BE LIMITED TO DATAFORTH, AT DATAFORTH'S SOLE DISCRETION, EITHER REPAIRING, REPLACING, OR REFUNDING THE PURCHASE PRICE OF THE DEFECTIVE PRODUCT(S) PROVIDED THAT WRITTEN NOTICE OF SAID DEFECT IS RECEIVED BY DATAFORTH WITHIN THE TIME PERIODS SET FORTH BELOW:

i. for all software products including licensed programs, thirty (30) days from date of initial delivery;

ii. for all hardware products including complete systems, three (3) years from date of initial delivery;

iii. for all special products, sixty (60) days from date of initial delivery; and

further, all products warranted hereunder for which Dataforth has received timely notice of nonconformance must be returned FOB to Dataforth's plant in Tucson, Arizona USA within thirty (30) days after the expiration of the warranty periods set forth above.

The foregoing warranties shall not apply to any products which Dataforth determines have, by buyer or otherwise, been subjected to operating and/or environmental conditions in excess of the maximum value established therefor in the applicable specifications, or any products that have been the subject of mishandling, misuse, misapplication, neglect, improper testing, repair, alteration or damage. THE PROVISIONS OF THE FOREGOING WARRANTIES EXTEND TO BUYER ONLY AND NOT TO BUYER'S CUSTOMERS OR USERS OF BUYER'S PRODUCTS. THE DATAFORTH STANDARD WARRANTY IS IN LIEU OF ALL WARRANTIES OF MERCHANTABILITY AND FITNESS FOR A PARTICULAR PURPOSE OR USE AND ALL OTHER WARRANTIES WHETHER EXPRESS, IMPLIED OR STATUTORY, EXCEPT AS TO TITLE. THE DATAFORTH STANDARD WARRANTY MAY BE CHANGED BY DATAFORTH WITHOUT NOTICE.

b. **Buyer Indemnity**. Buyer agrees to indemnify and hold Dataforth harmless from and against any and all claims, damages and liabilities whatsoever asserted by any person, entity, industry organization, government, or governmental agency of any country resulting directly or indirectly (i) from any acts not authorized by Dataforth in writing or any statements regarding the products inconsistent with Dataforth's product documentation or standard warranty, or (ii) from any breach or threatened breach by buyer, or by any of its employees or agents, of any term, condition or provision of this Warranty or (iii) from any warranty, representation, covenant or obligation given by buyer to any third party and not expressly provided for in this Warranty or (iv) for any non-compliance (in any form) of the products with any necessary or mandatory applicable laws, regulations, procedures, government or industry policies or requirements related to the use, sale or importation of the products. Such indemnification shall include the payment of all reasonable attorneys' fees and other costs incurred by Dataforth in defending such claim.

c. **Limitation on Damages.**

(1) IN NO EVENT SHALL DATAFORTH, ITS SUPPLIERS, LICENSORS, SERVICE PROVIDERS, EMPLOYEES, AGENTS, OFFICERS, AND DIRECTORS BE LIABLE FOR INDIRECT, SPECIAL, INCIDENTAL, COVER, ECONOMIC, PUNITIVE, ACTUAL, EXEMPLARY, CONSEQUENTIAL OR OTHER DAMAGES OF ANY NATURE INCLUDING, WITHOUT LIMITATION, LOST PROFITS OR REVENUES, COSTS OF REPLACEMENT PRODUCTS, LOSS OR DAMAGE TO DATA ARISING OUT OF THE USE OR INABILITY TO USE ANY DATAFORTH PRODUCT.

(2) IN NO EVENT SHALL DATAFORTH BE LIABLE FOR DIRECT, SPECIAL, INDIRECT, INCIDENTAL OR CONSEQUENTIAL DAMAGES OF ANY NATURE RESULTING FROM BUYER'S NONCOMPLIANCE (IN ANY FORM) WITH ALL NECESSARY OR MANDATORY APPLICABLE LAWS, REGULATIONS, PROCEDURES, GOVERNMENT POLICIES OR REQUIREMENTS RELATED TO THE USE, SALE OR IMPORTATION OF PRODUCTS.

(3) IN NO EVENT WILL THE COLLECTIVE LIABILITY OF DATAFORTH AND ITS SUPPLIERS, LICENSORS, SERVICE PROVIDERS, EMPLOYEES, AGENTS, OFFICERS, AND DIRECTORS TO ANY PARTY (REGARDLESS OF THE FORM OF ACTION, WHETHER BASED UPON WARRANTY, CONTRACT, TORT, OR OTHERWISE) EXCEED THE GREATER OF EITHER US$1000.00 (ONE THOUSAND DOLLARS U.S.A. CURRENCY) OR THE AMOUNT PAID TO DATAFORTH FOR THE APPLICABLE PRODUCT OR SERVICE OUT OF WHICH LIABILITY AROSE.

(4) DATAFORTH'S LIABILITY ARISING OUT OF THE PRODUCTION, SALE OR SUPPLY OF PRODUCTS OR THEIR USE OR DISPOSITION, WHETHER BASED UPON WARRANTY, CONTRACT, TORT OR OTHERWISE, SHALL NOT EXCEED THE GREATER OF EITHER US$1000.00 (ONE THOUSAND DOLLARS U.S.A. CURRENCY) OR THE ACTUAL PURCHASE PRICE PAID BY BUYER FOR DATAFORTH'S PRODUCTS. DATAFORTH'S LIABILITY FOR ANY CLAIM OF ANY KIND SHALL IN NO CASE EXCEED THE OBLIGATION OR LIABILITY SPECIFIED IN THIS WARRANTY.

d. **Technical Assistance.** Dataforth's Warranty as hereinabove set forth shall not be enlarged, diminished or affected by, and no obligation or liability shall arise or grow out of, Dataforth's rendering of technical advice, facilities or service in connection with buyer's order of the products furnished hereunder.

e. **Warranty Procedures.** Buyer shall notify Dataforth of any products which it believes to be defective during the applicable warranty period and which are covered by the Warranty set forth above. Buyer shall not return any products for any reason without the prior authorization of Dataforth and issuance of a Return Material Authorization ("RMA") number. After issuance of a RMA number, such products shall be promptly returned by buyer (and in no event later than thirty (30) days after the Warranty expiration date), transportation and insurance prepaid, to Dataforth's designated facility for examination and testing. Dataforth shall either repair or replace any such products found to be so defective and promptly return such products to buyer, transportation and insurance prepaid. Should Dataforth's examination and testing not disclose any defect covered by the foregoing Warranty, Dataforth shall so advise buyer and dispose of or return the products in accordance with buyer's instructions and at buyer's sole expense, and buyer shall reimburse Dataforth for testing expenses incurred at Dataforth's then current repair rates.

f. **Repair Warranty.** Dataforth warrants its repair work and/or replacement parts for a period of ninety (90) days from receipt by buyer of the repaired or replaced products or for the remainder of the warranty period for the initial delivery of such order as set forth in paragraph a above, whichever is greater.

g. **Critical Applications.** Certain applications using Dataforth's products may involve potential risks of death, personal injury, or severe property or environmental damage ("Critical Applications"). DATAFORTH'S PRODUCTS ARE NOT DESIGNED, INTENDED, AUTHORIZED, OR WARRANTED TO BE SUITABLE FOR USE IN LIFE-SUPPORT DEVICES OR SYSTEMS, SAFETY EQUIPMENT, NUCLEAR FACILITY APPLICATIONS OR OTHER CRITICAL APPLICATIONS WHERE MALFUNCTION OF THE PRODUCT CAN BE EXPECTED TO RESULT IN PERSONAL INJURY, DEATH OR SEVERE PROPERTY DAMAGE. BUYER USES OR SELLS SUCH PRODUCTS FOR USE IN SUCH CRITICAL APPLICATIONS AT BUYER'S OWN RISK AND AGREES TO DEFEND, INDEMNIFY AND HOLD HARMLESS DATAFORTH FROM ANY AND ALL DAMAGES, CLAIMS, PROCEEDINGS, SUITS OR EXPENSE RESULTING FROM SUCH USE.

h. **Static Sensitive.** Dataforth ships all product in anti-static packages. Dataforth's Warranty as hereinabove set forth shall not cover warranty repair, replacement, or refund on product or devices damaged by static due to buyer's failure to properly ground.

Application Support

Dataforth provides timely, high-quality product support. Call **1-800-444-7644 TOLL-FREE**

Returns/Repair Policy

All warranty and repair requests should be directed to the Dataforth Customer Service Department at (520) 741-1404. If a product return is required, request a Return Material Authorization (RMA) number. You should be ready to provide the following information:

1. Complete product model number.
2. Product serial number.
3. Name, address, and telephone number of person returning product.
4. Special repair instructions.
5. Purchase order number for out-of-warranty repairs.

The product should be carefully packaged, making sure the RMA number appears on the outside of the package, and shipped prepaid to:

Dataforth Corporation
6230 S. Country Club
Tucson, AZ 85706 USA

The information provided herein is believed to be reliable; however, DATAFORTH assumes no responsibility for inaccuracies or omissions. DATAFORTH assumes no responsibility for the use of this information, and all use of such information shall be entirely at the user's own risk. Application information is intended as suggestions for possible use of the products and not as explicit performance in a specific application. Prices and specifications are subject to change without notice. No patent rights or licenses to any of the circuits described herein are implied or granted to any third party. DATAFORTH does not authorize or warrant any DATAFORTH product for use in life-support devices and/or systems.

DATAFORTH®

High Performance Industrial Signal Conditioning, Data Acquisition & Control, and Data Communication Products Since 1984

WORLD HEADQUARTERS



Dataforth Corporation
3331 E. Hemisphere Loop
Tucson, AZ 85706 USA
Toll Free: 800-444-7644
Tel: 520-741-1404
Fax: 520-741-0762
Email: sales@dataforth.com
www.dataforth.com

Dataforth Europe
Tel: +44 (0) 1785 472 727
Email: customerservice@dataforth.eu
www.dataforth.eu

Asia/Pacific Customer Assistance
Tel: +1 800-444-7644
Email: sales@dataforth.com
Web: www.dataforth.com
www.dataforth.com.cn

All Dataforth Products Manufactured per RoHS II Directive 2011/65/EU

The Dataforth Quality Management System is ISO9001:2008 Registered

www.dataforth.com

CAT-103M 06/17
©1995-2017 Dataforth Corporation, All Rights Reserved ISO9001:2008-Registered QMS